HOUSE BED WITH SLIDE

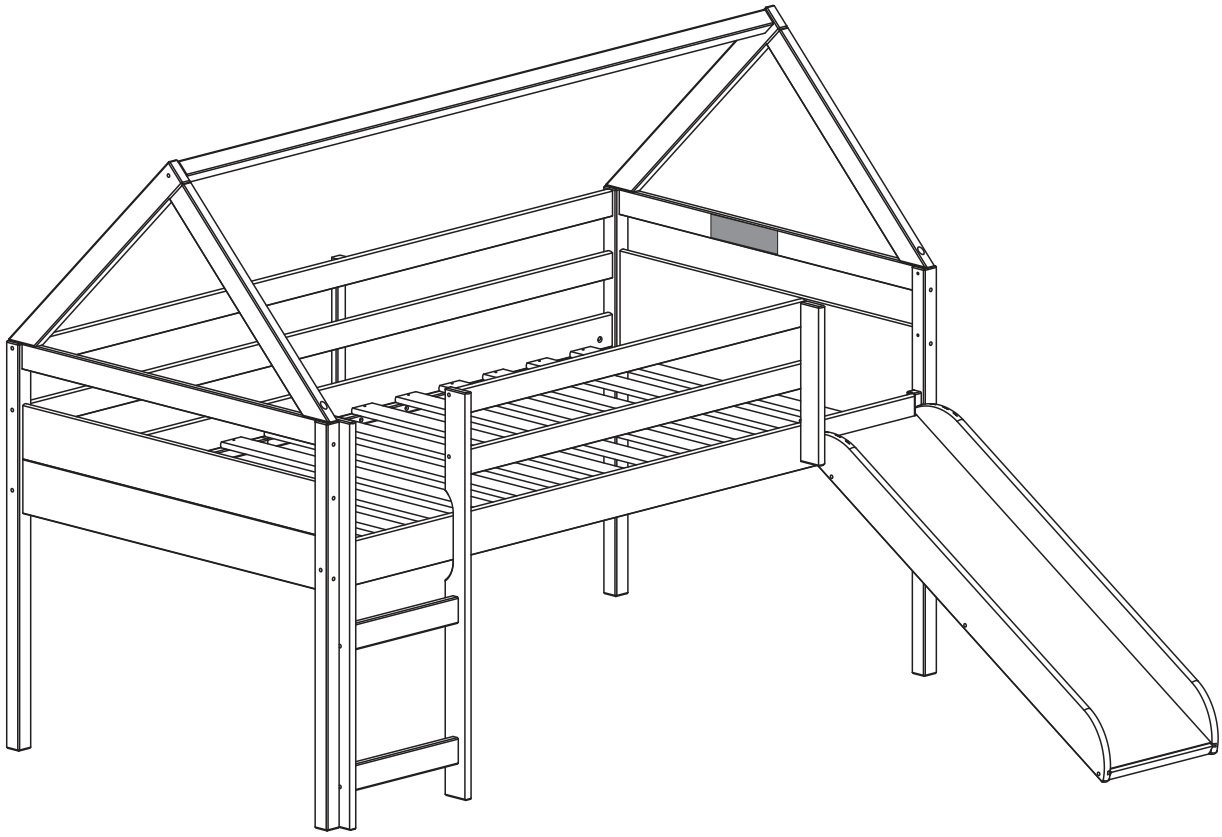

REV. 04/24

WARNING

* **STRANGULATION HAZARD** - NEVER ATTACH OR HANG ITEMS TO ANY PART OF THE BUNK BED THAT ARE NOT DESIGNED FOR USE WITH THE BED; FOR EXAMPLE, BUT NOT LIMITED TO, HOOKS, BELTS AND JUMP ROPES.
* FOLLOW THE INFORMATION ON THE WARNINGS APPEARING ON THE UPPER BUNK END STRUCTURE AND ON THE CARTON. DO NOT REMOVE WARNING LABEL FROM BED.
* THE MATTRESS PLATFORM IS DESIGNED TO SUPPORT A MATTRESS WITHOUT THE NEED FOR A POSTURE BOARD OR BOX SPRING.
* ALWAYS USE THE RECOMMENDED SIZE MATTRESS OR MATTRESS SUPPORT, OR BOTH, TO HELP PREVENT THE LIKELIHOOD OF ENTRAPMENT OR FALLS.
* USE ONLY MATTRESSES WHICH IS 74"-75" LONG AND 37 1/2" - 38 1/2" WIDE ON BED. ENSURE THICKNESS OF MATTRESS DOES NOT EXCEED **8**". SURFACE OF MATTRESS MUST BE AT LEAST 5" (127MM) BELOW THE UPPER EDGE OF GUARDRAILS.
* DO NOT ALLOW CHILDREN UNDER 4 YEARS OF AGE TO USE THE UPPER BUNK.
* ALWAYS USE GUARDRAILS ON BOTH LONG SIDES OF THE UPPER BUNK. IF THE BUNK BED WILL BE PLACED NEXT TO THE WALL, THE GUARDRAIL THAT RUNS THE FULL LENGTH OF THE BED SHOULD BE PLACED AGAINST THE WALL TO PREVENT ENTRAPMENT BETWEEN THE BED AND WALL (APPLICABLE FOR BUNK BEDS WITH FULL LENGTH GUARDRAILS ON ONE SIDE).
* PERIODICALLY CHECK AND ENSURE THAT THE GUARDRAIL, LADDER AND OTHER COMPONENTS ARE IN THEIR PROPER POSITION, FREE FROM DAMAGE, AND THAT ALL CONNECTORS ARE TIGHT.
* DO NOT ALLOW HORSEPLAY ON OR UNDER THE BED AND PROHIBIT JUMPING ON THE BED.
* DO NOT USE SUBSTITUTE PARTS. CONTACT CUSTOMER SERVICE FOR REPLACEMENT PARTS.
* USE OF A NIGHT LIGHT MAY PROVIDE ADDED SAFETY PRECAUTION FOR A CHILD USING THE UPPER BUNK.
* THE USE OF WATER OR SLEEP FLOTATION MATTRESSES IS PROHIBITED.
* ALWAYS USE THE LADDER FOR ENTERING AND LEAVING THE UPPER BUNK.
* PROHIBIT MORE THAN ONE PERSON ON UPPER BUNK.
* KEEP THESE INSTRUCTIONS FOR FUTURE USE.

PART LIST

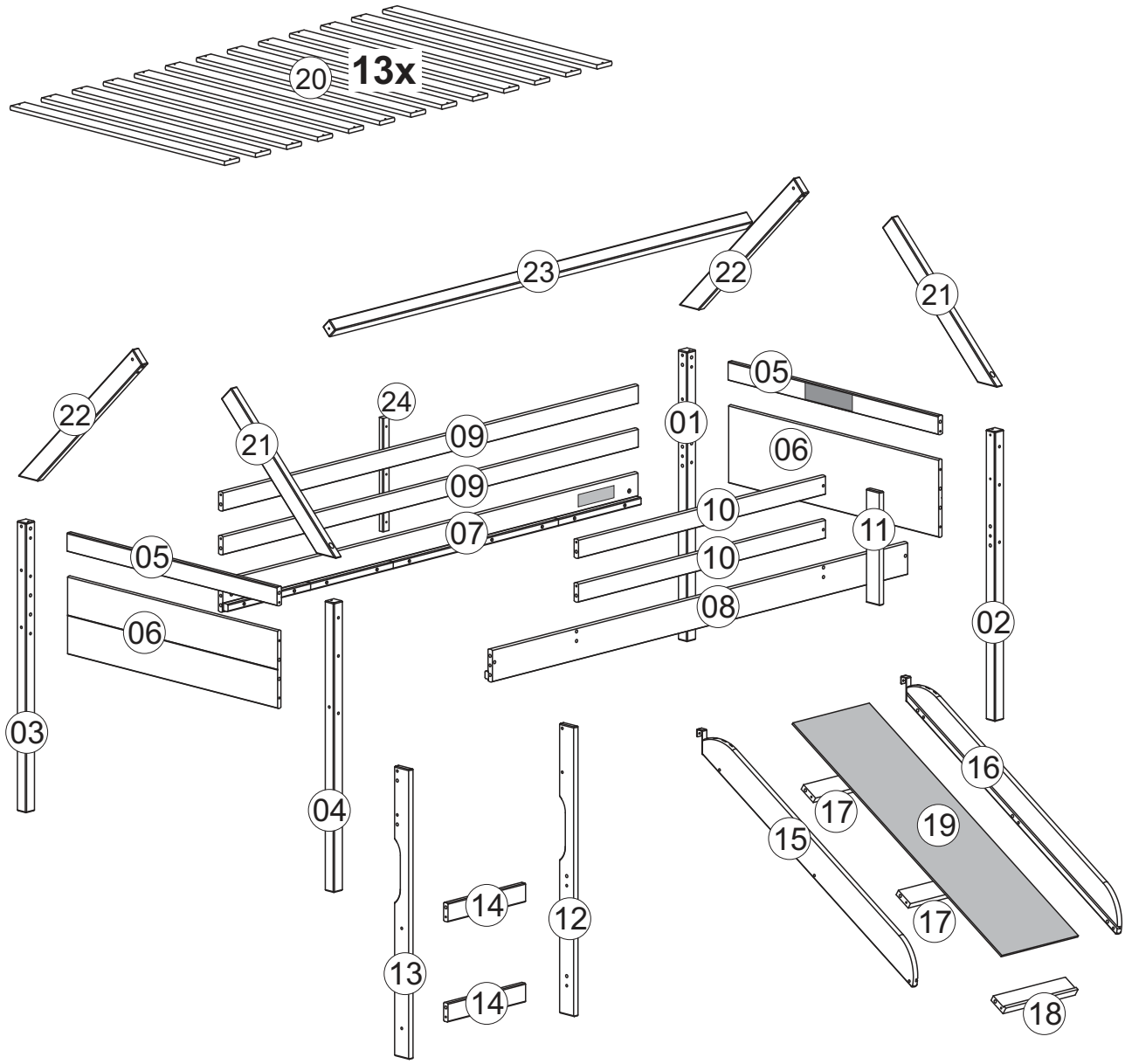
20
13x
23
22
21
22
24
21
09
09
07
01
05
06
10
10
08
11
05
06
03
04
02
13
14
14
12
15
17
19
17
16
18

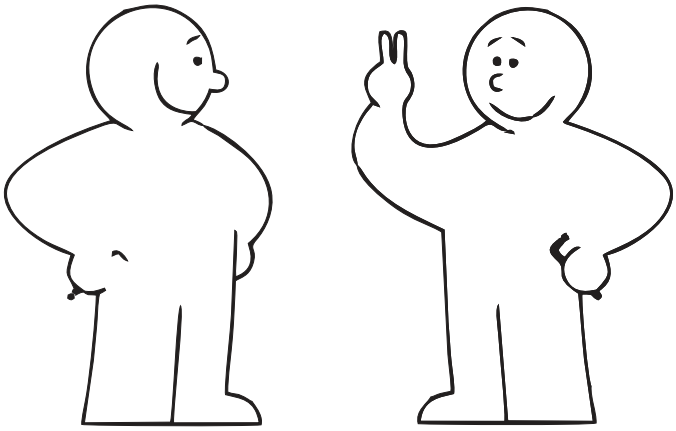

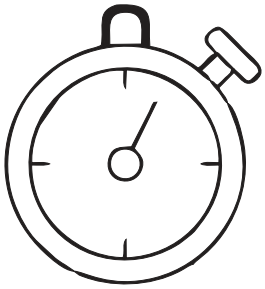

60 Min

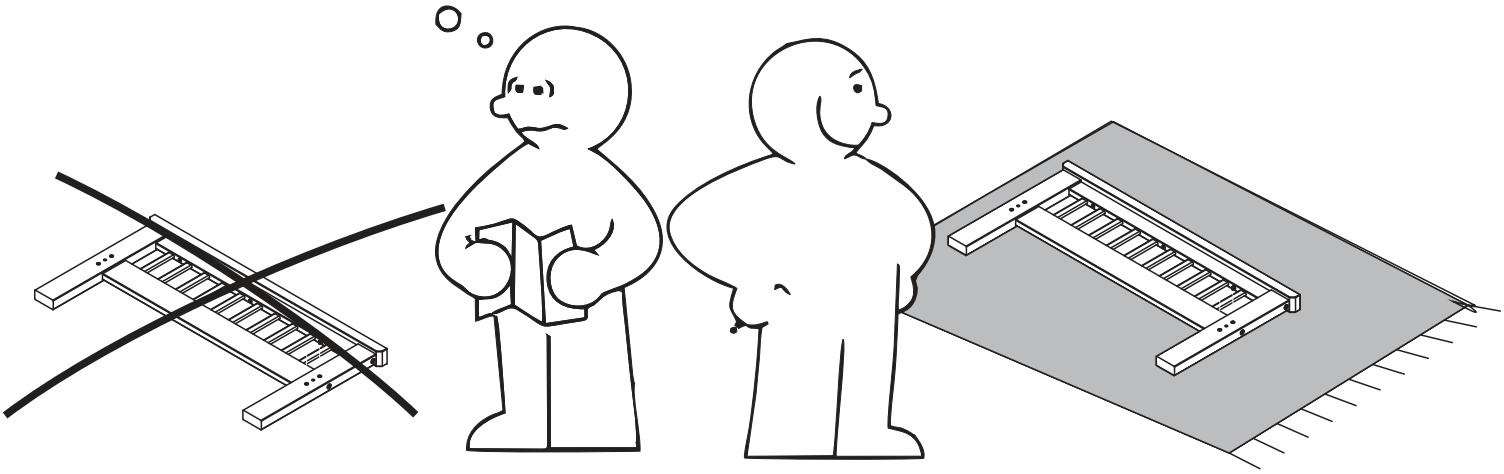

Tools required

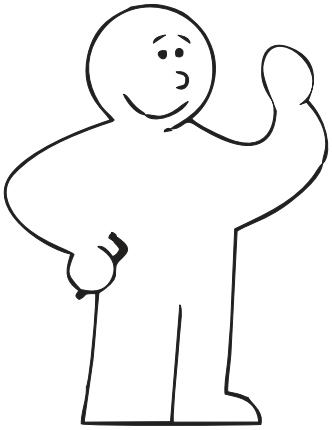

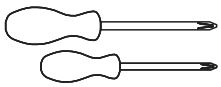

Phillips screwdriver (medium & large)

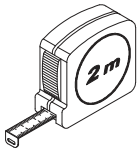

Ruler/tape measure

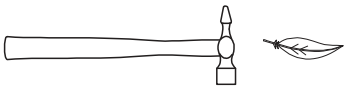

Small hammer

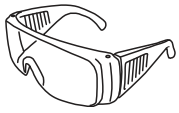

Eye protection (when using a hammer or glue)

A	1/4 X 90 X 17mm Bolt	04
B	1/4 Nut	04
C	Ø7 X 100 X 17mm Bolt	02
D	Ø7 X 60 X 17mm Bolt	18
E	Ø7 X 80 X 17mm Bolt	18
F	ALLEN KEY	01
G	Ø7 X 50 X 17mm Bolt	02
H	Ø10 X 40mm Wooden dowel	38
I	72mm Wood Block	02
J	Ø4,0 X 35mm Screw	29
K	2078 (22mm Opening hook)	02
L	Ø3,5 X 16mm Screw	06
M	Ø7 X 90 X 13mm Bolt	04

Ruler - Use this ruler to help correctly identify the screws

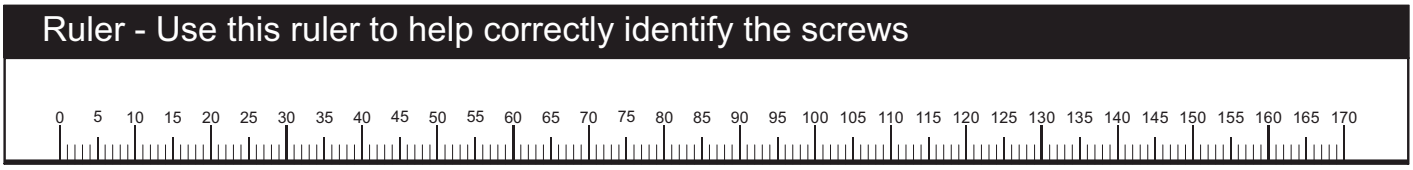

01

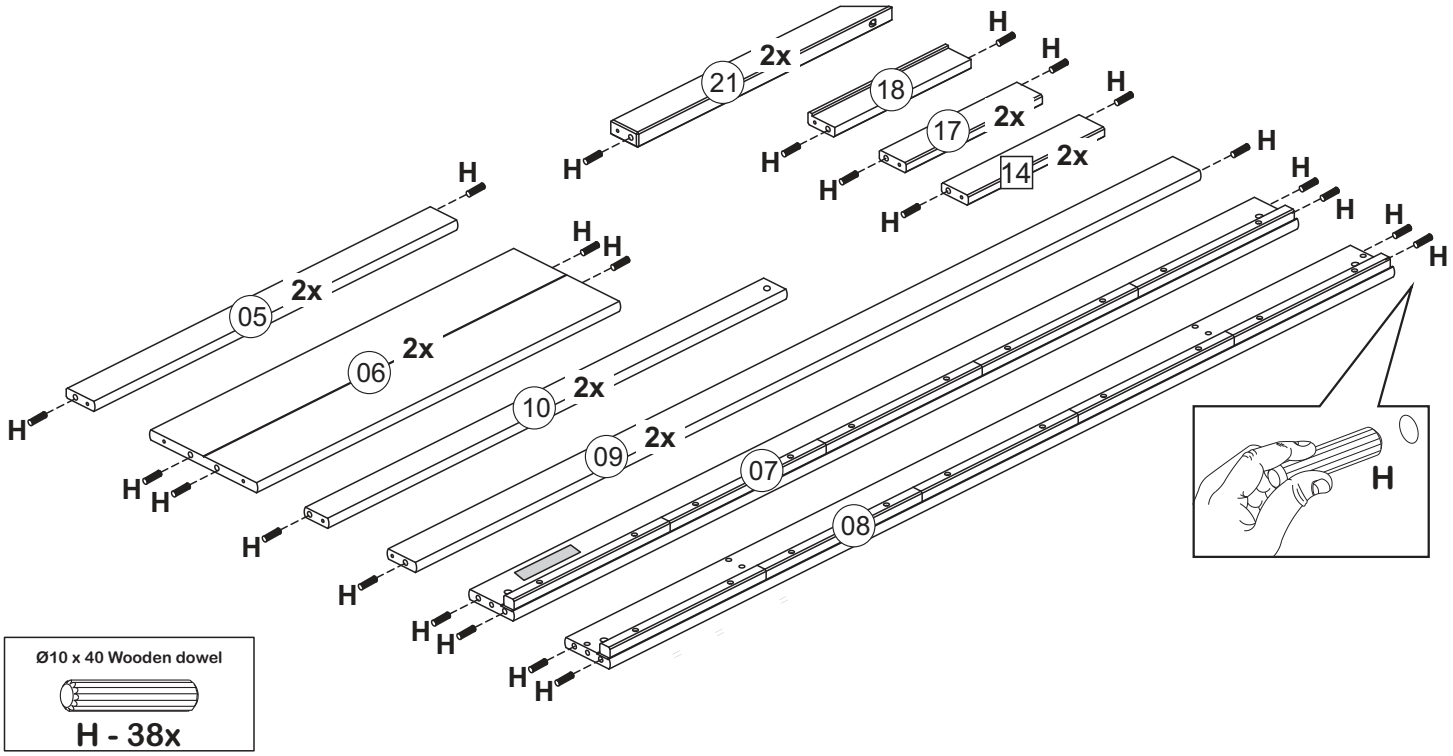

02

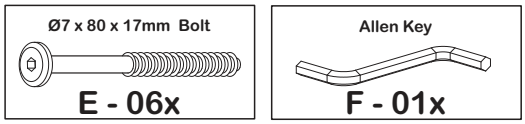

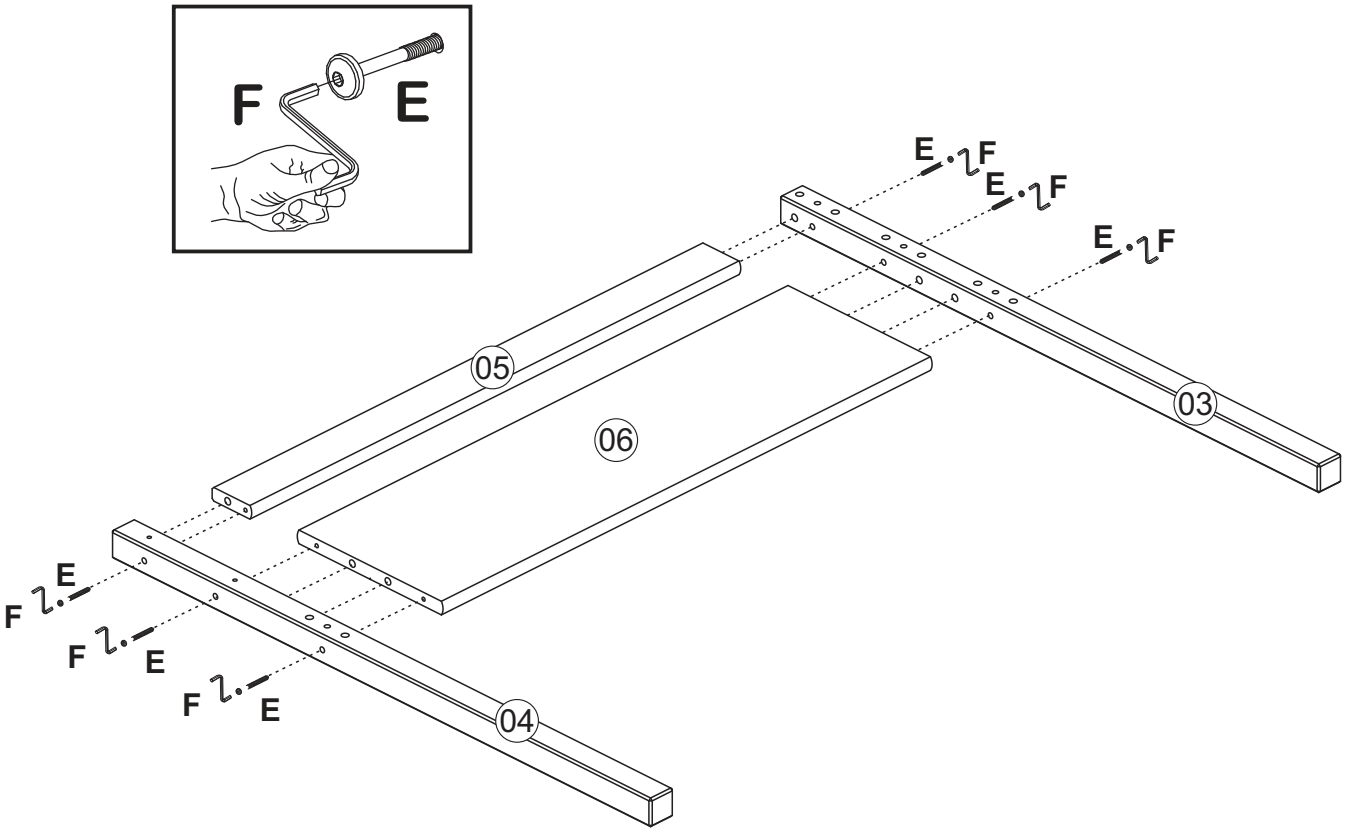

LEFT HEADBOARD

03

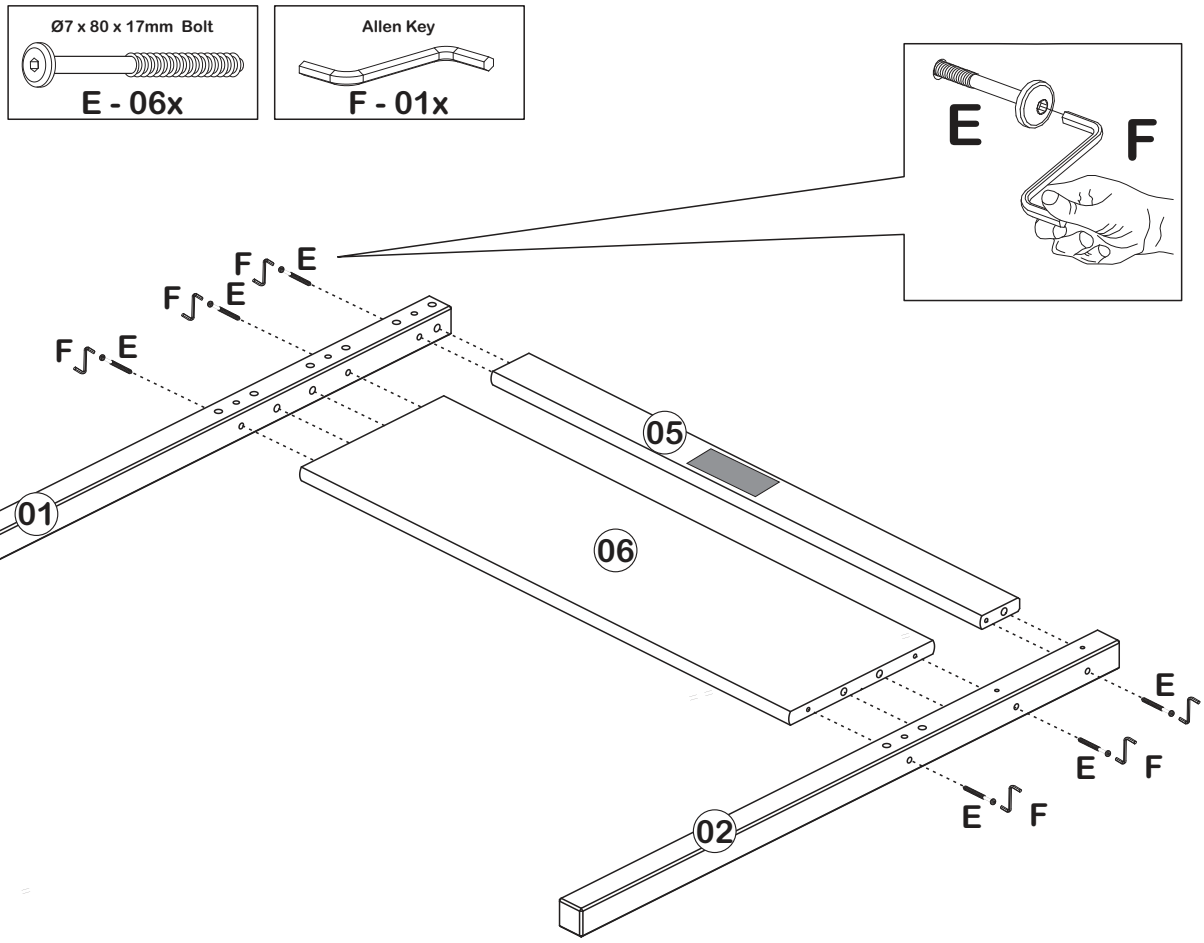

RIGHT HEADBOARD

04

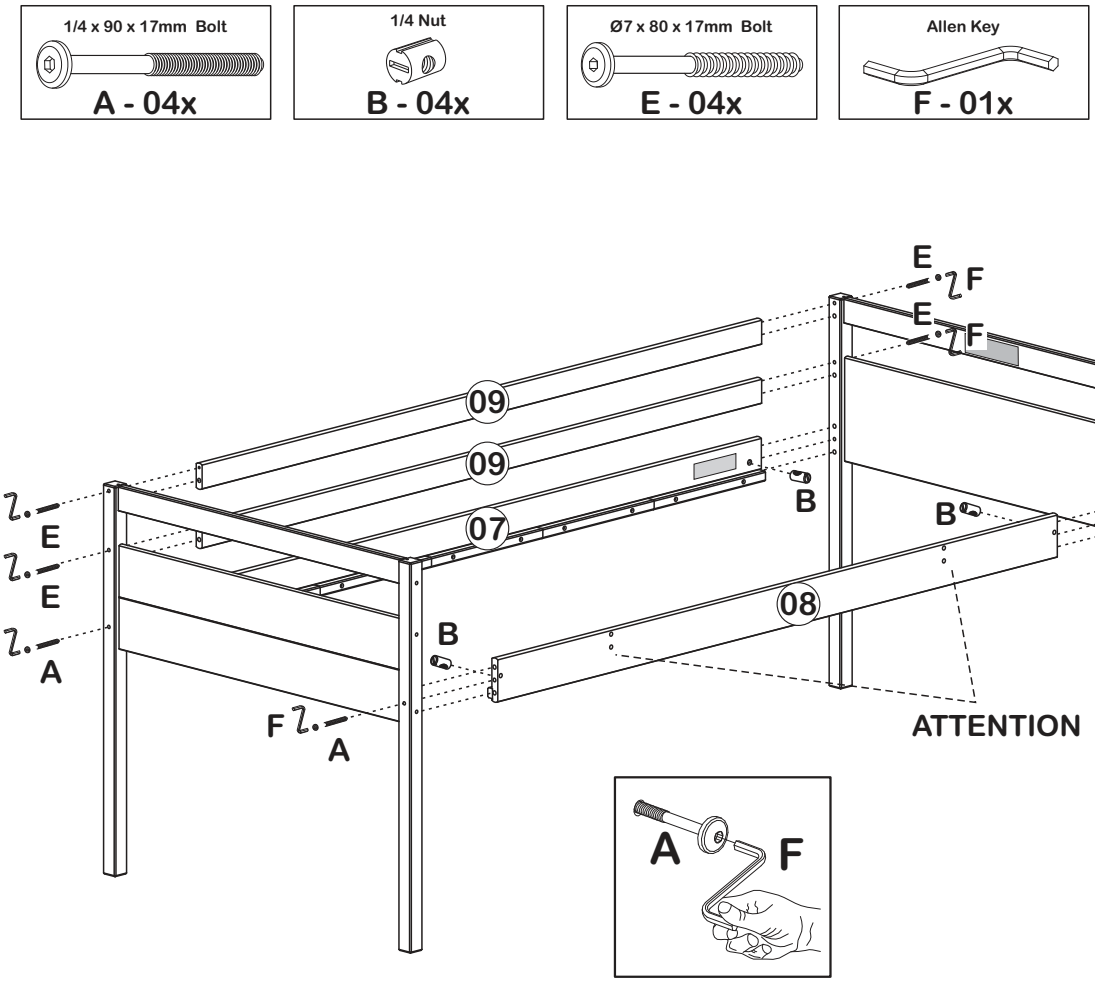

05

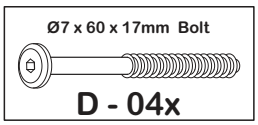

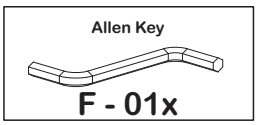

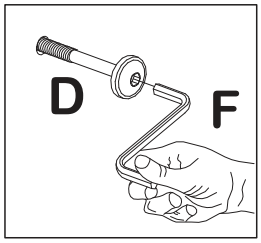

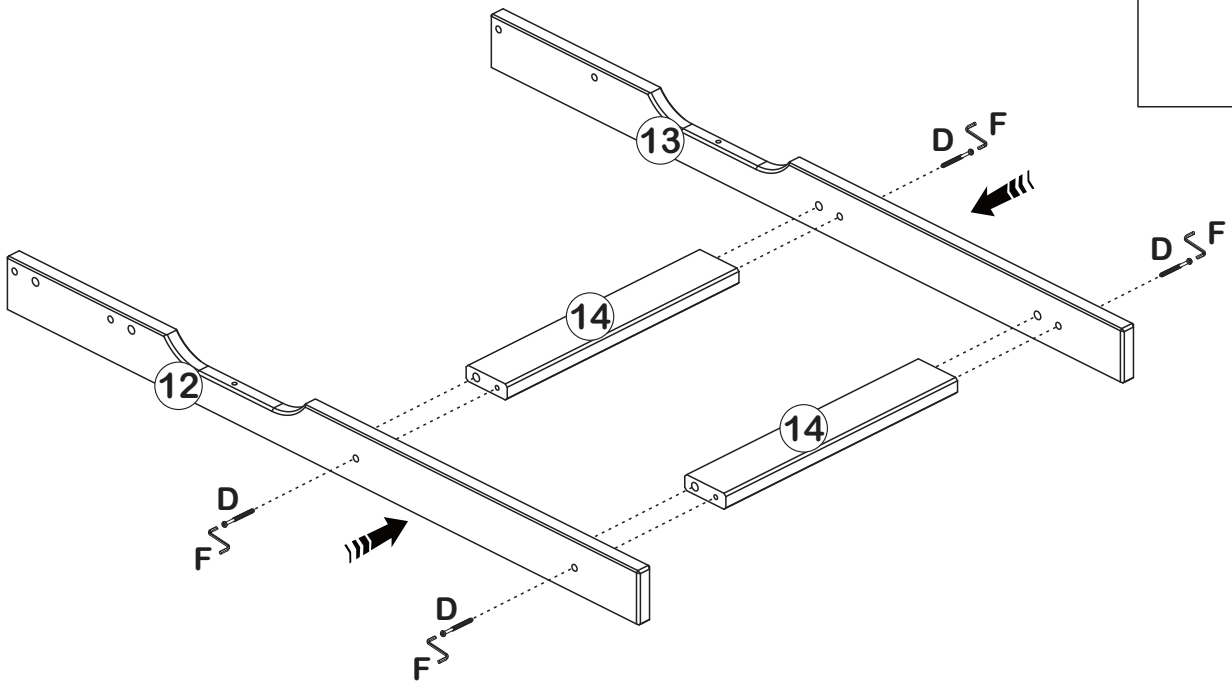

06

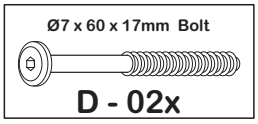

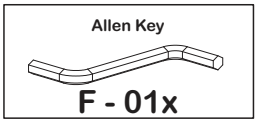

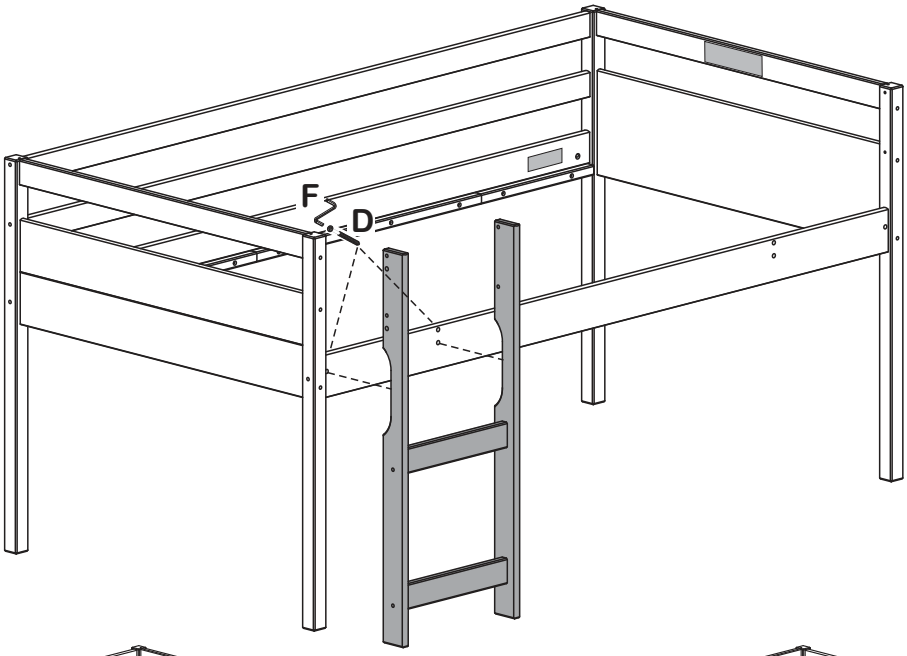

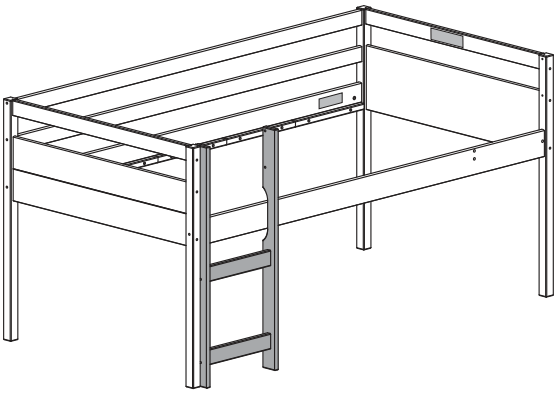

Left Side

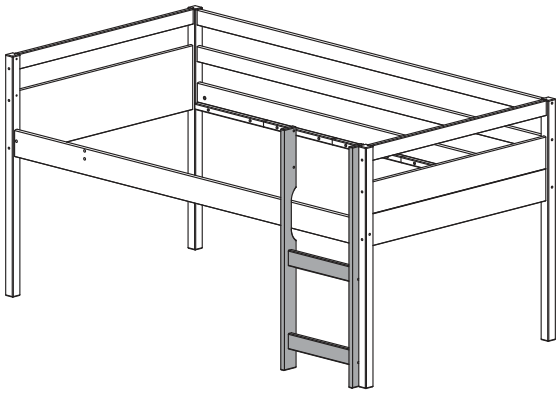

Right Side

07

Ø7 x 60 x 17mm Bolt	Allen Key	Ø4,0 x 35mm Screw
D - 06x	F - 01x	J - 03x

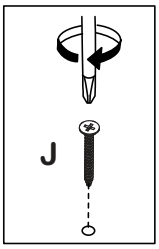

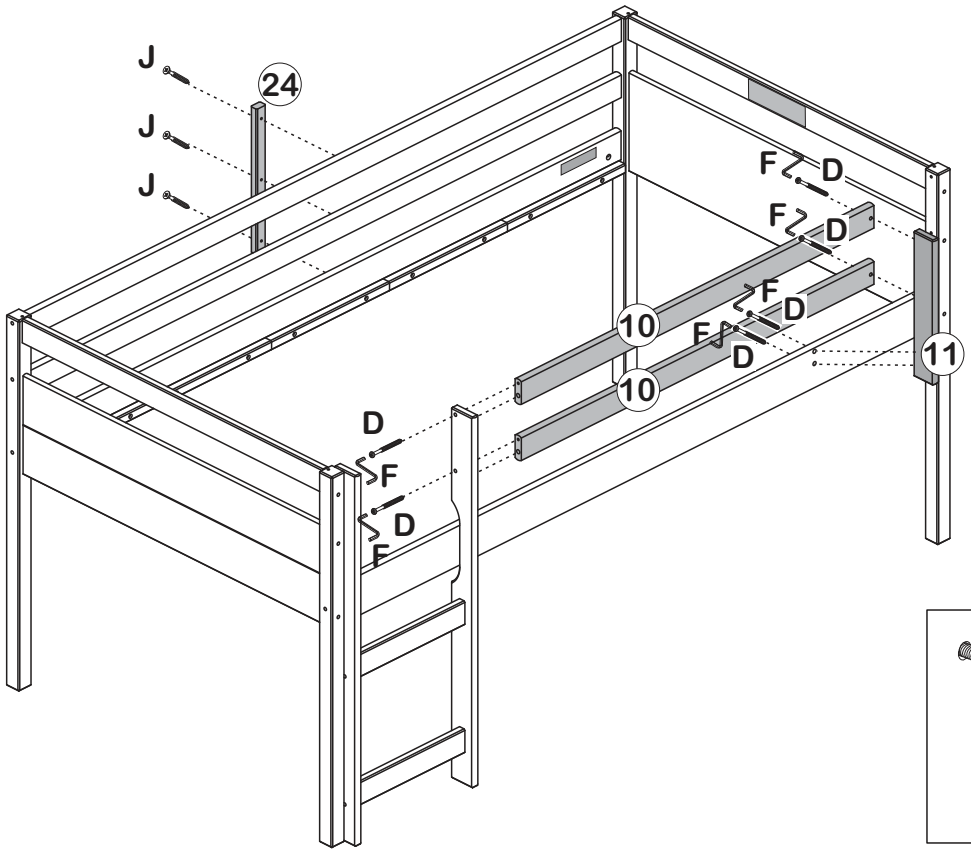

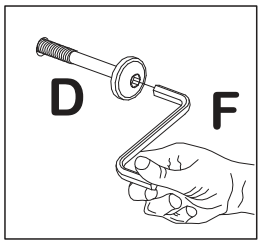

08

Ø7 x 50 x 17mm Bolt	Allen Key
G - 02x	F - 01x

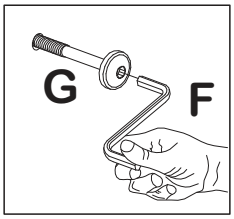

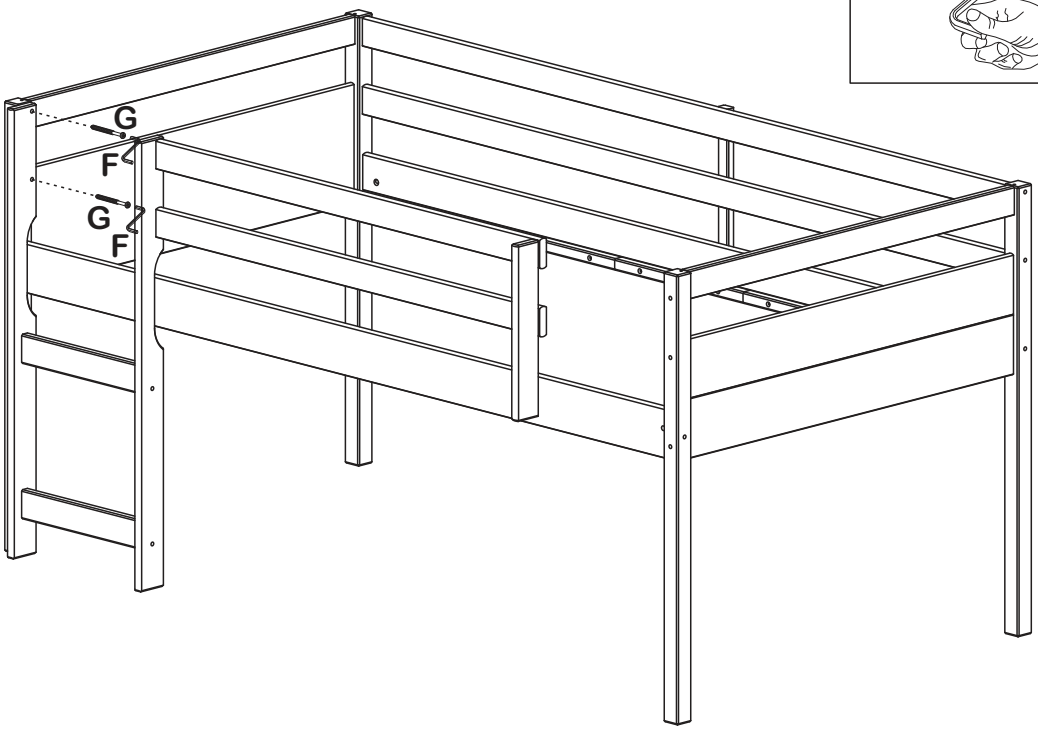

09

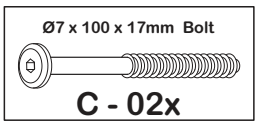
Ø7 x 100 x 17mm Bolt
C - 02x

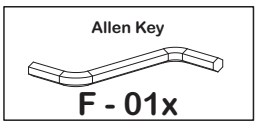
Allen Key
F - 01x

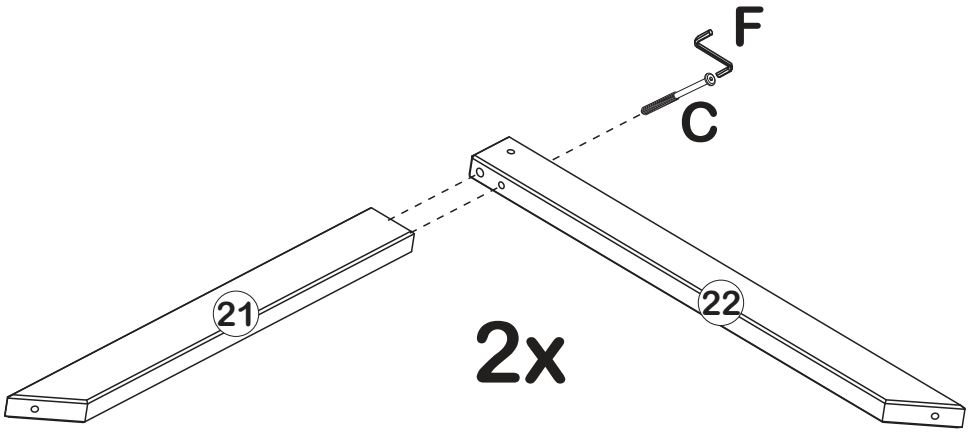
F
C
21
22
2x

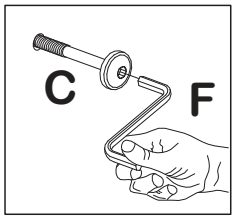
C
F

10

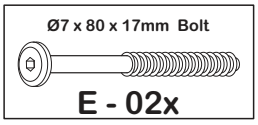
Ø7 x 80 x 17mm Bolt
E - 02x

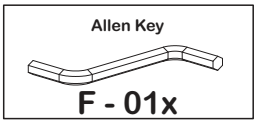
Allen Key
F - 01x

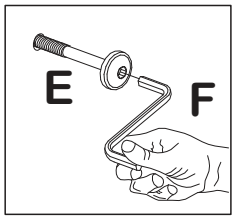
E
F

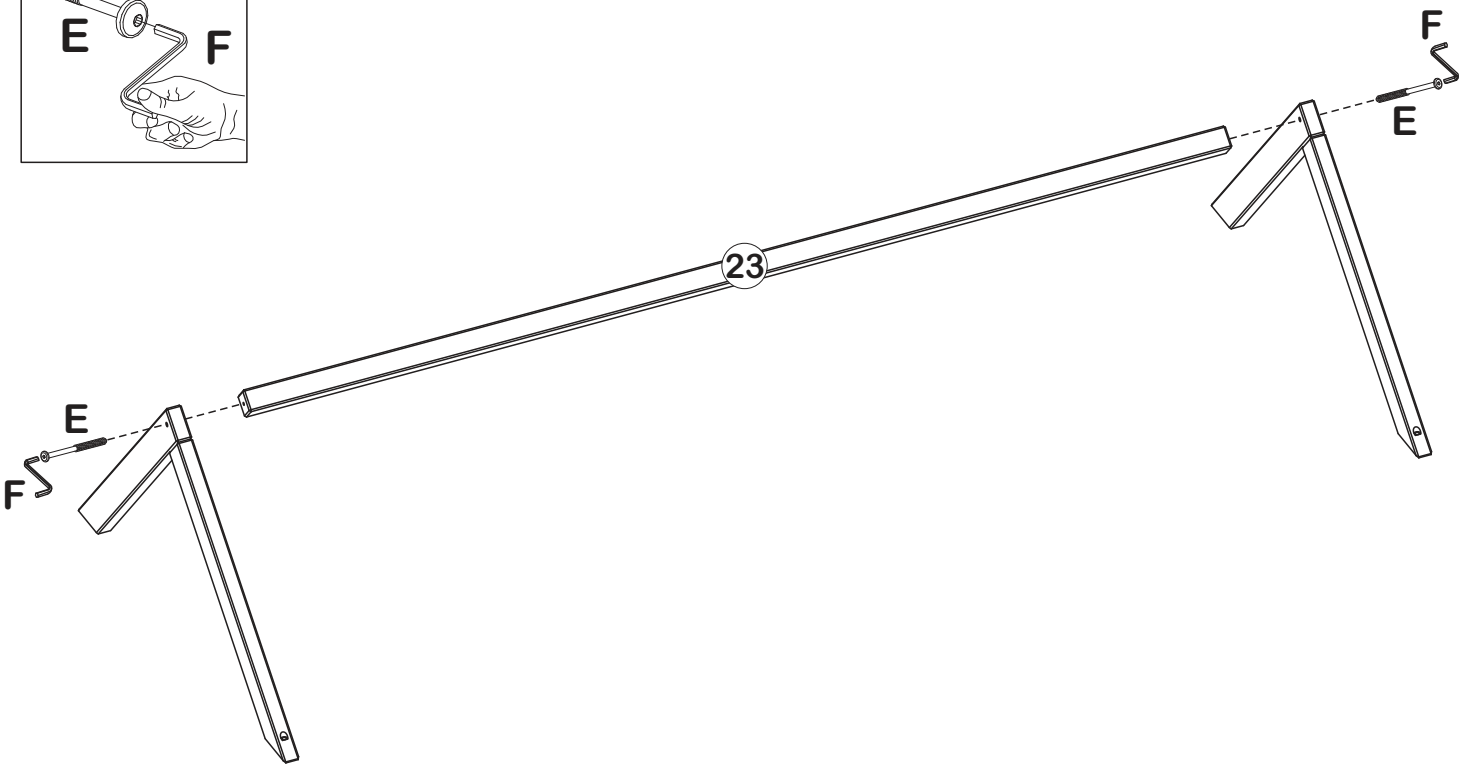
F
E
23
E
F

11

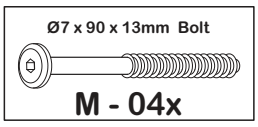
Ø7 x 90 x 13mm Bolt
M - 04x

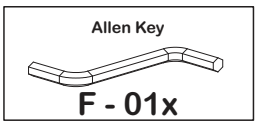
Allen Key
F - 01x

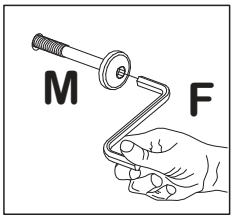
M
F

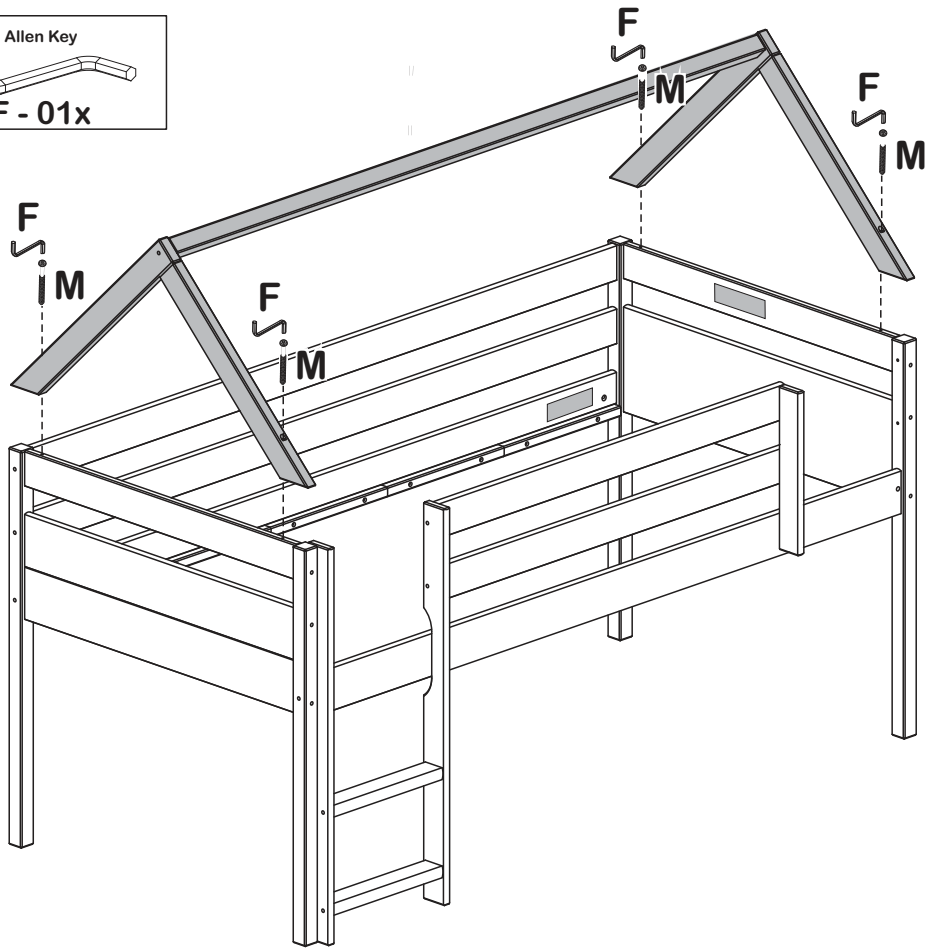
F
M
F
M
F
M
F
M

12

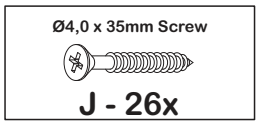
Ø4,0 x 35mm Screw
J - 26x

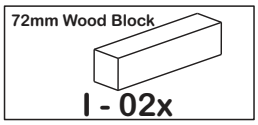
72mm Wood Block
I - 02x

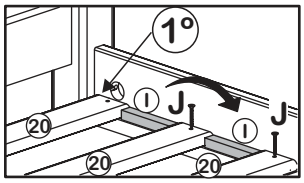
1º
I
J
J
I
20
20
20

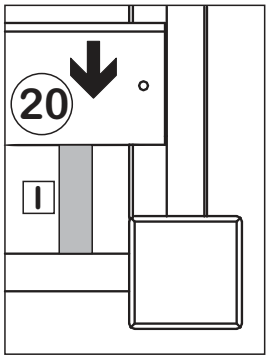
20
I

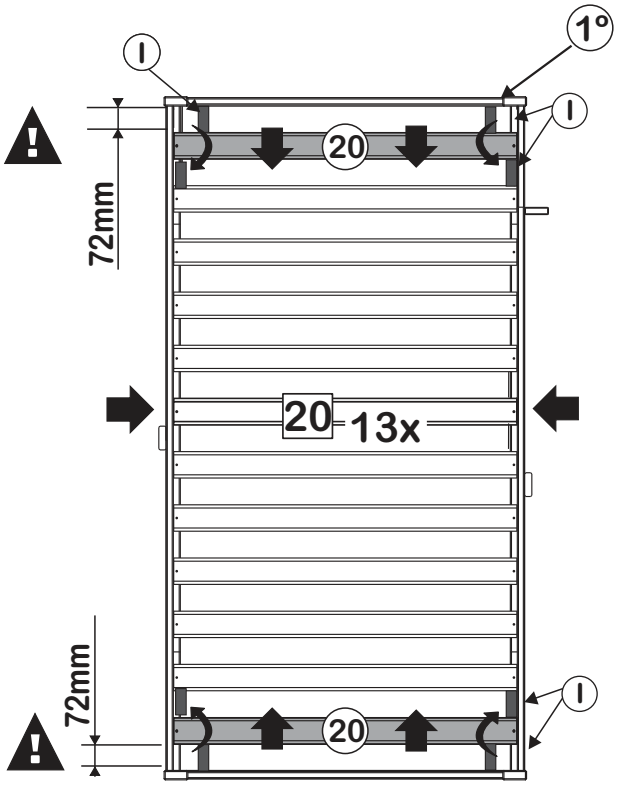
I
1º
I
20
72mm
20
13x
72mm
I
20

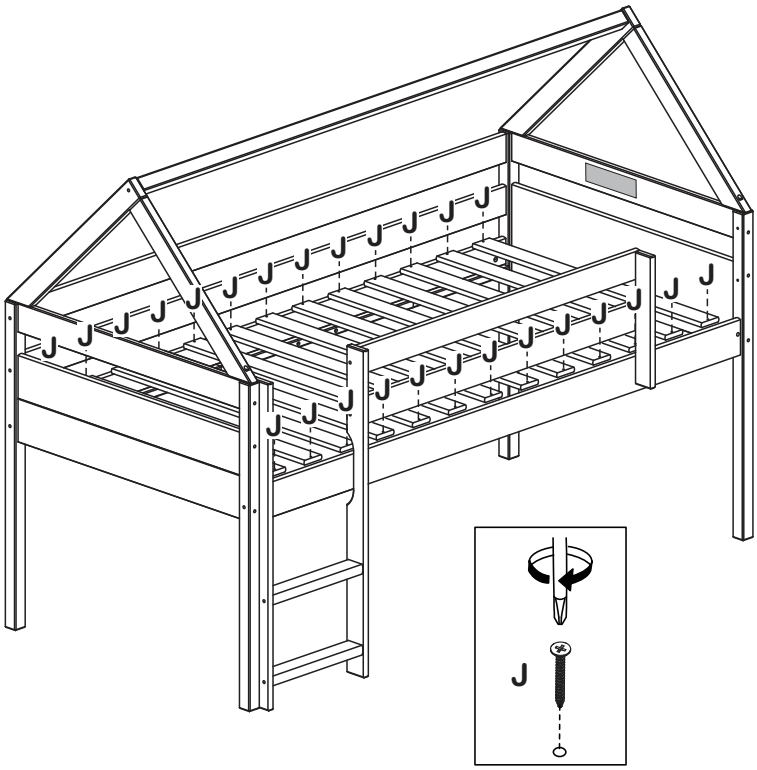
J
J

13

Ø7 x 60 x 17mm Bolt	Allen Key
D - 06x	F - 01x

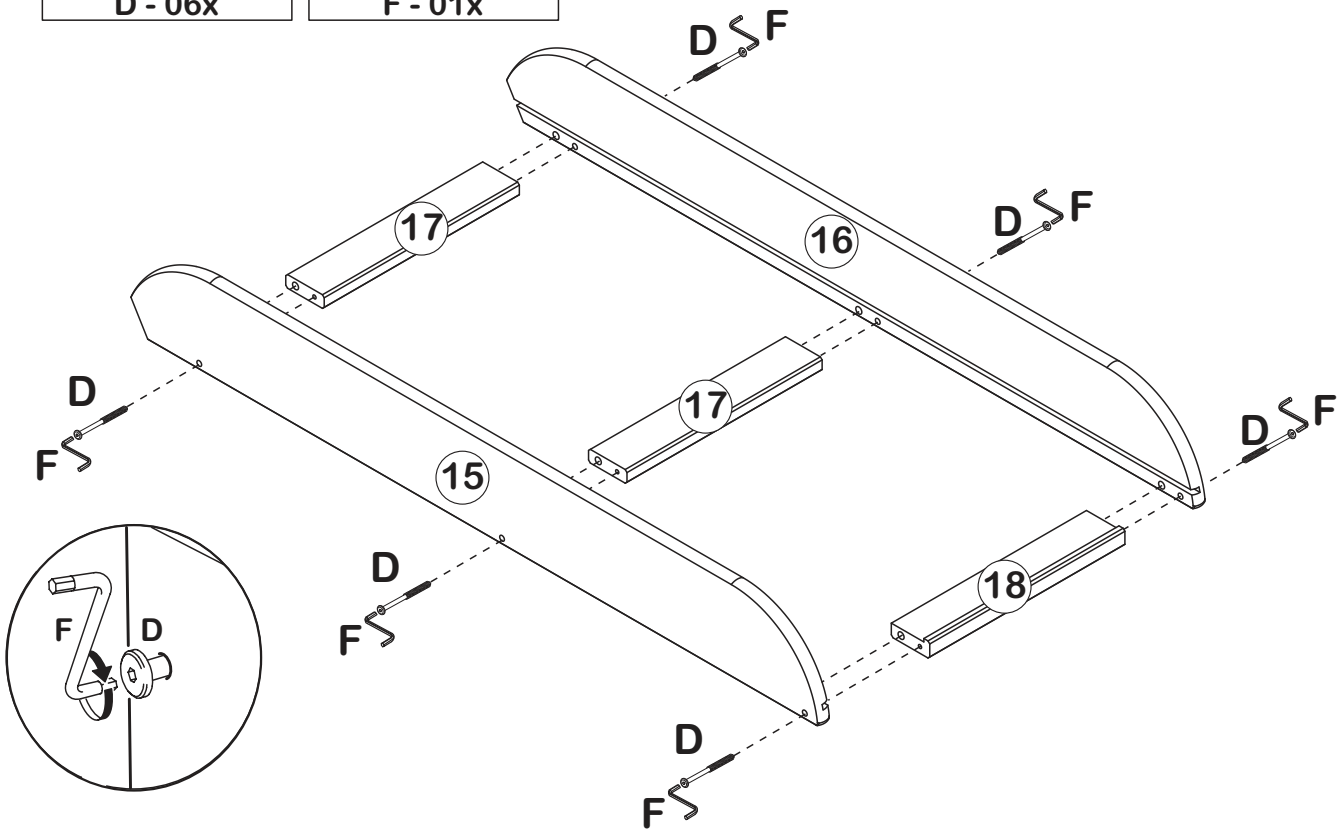

14

Ø3,5 x 16mm Screw	2078 (22mm Opening)
L - 04x	K - 02x

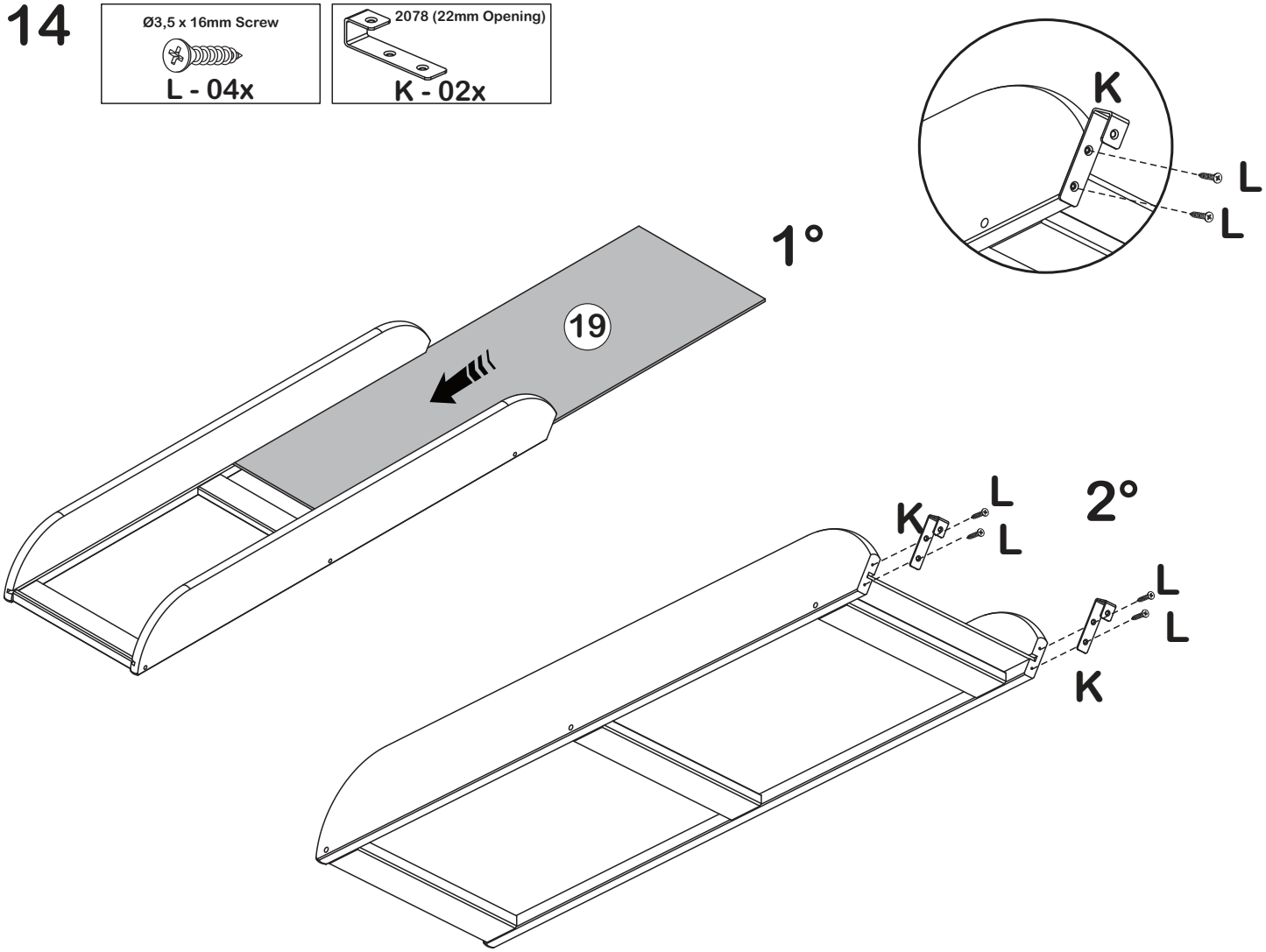

15

Ø3,5 x 16mm Screw

L - 02x

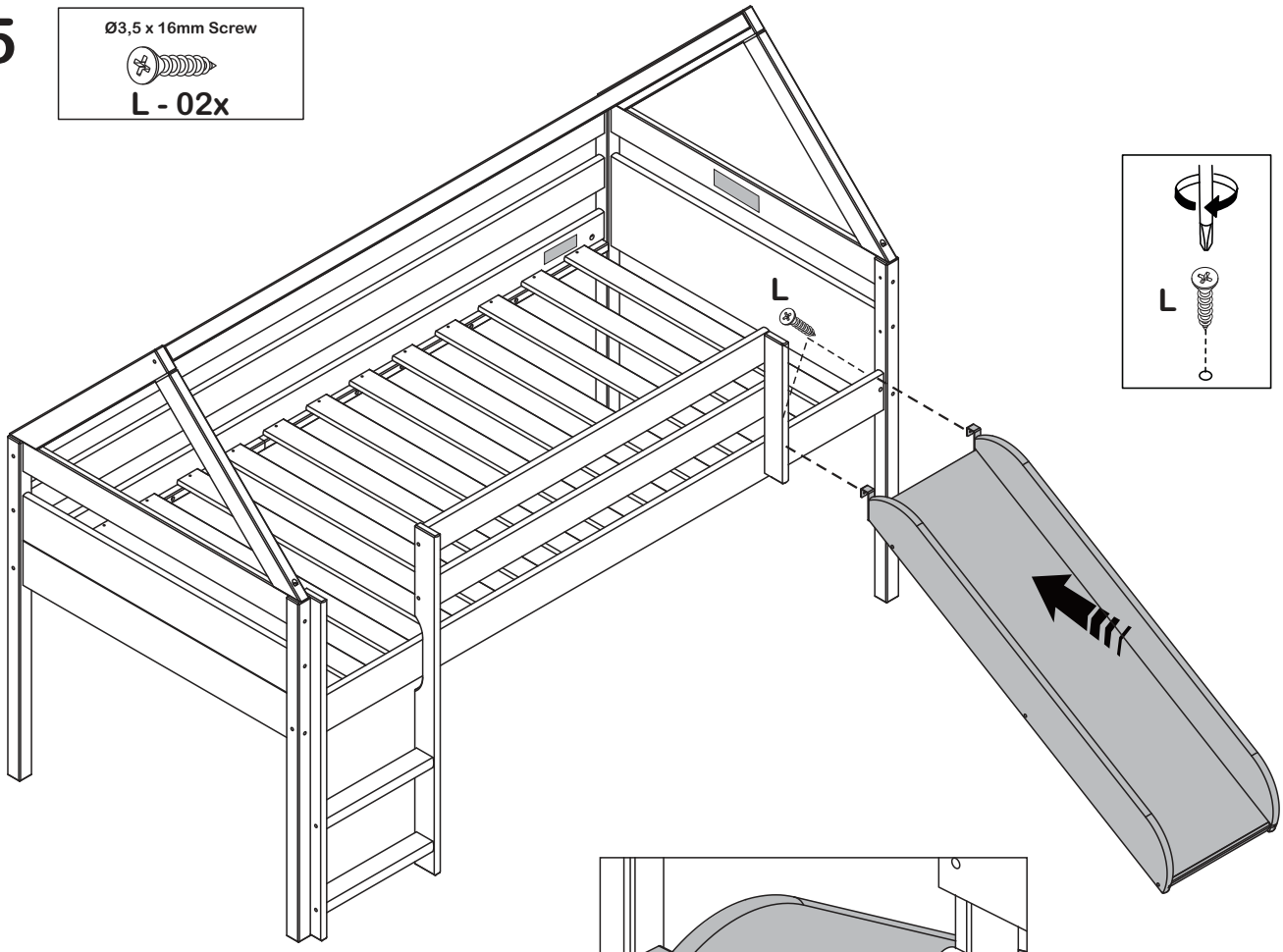

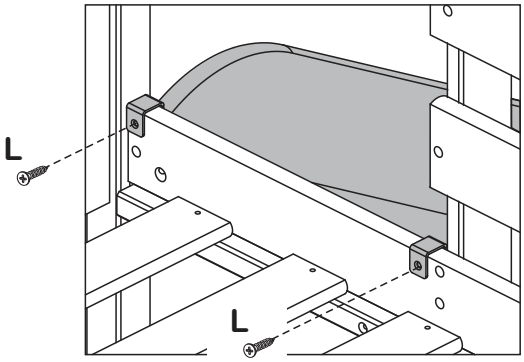

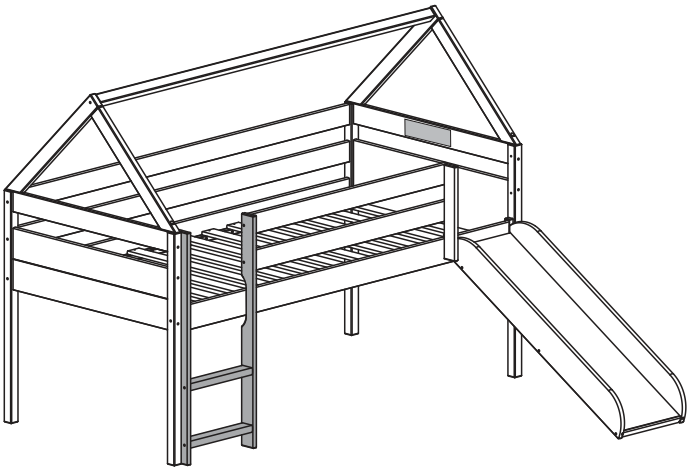

Left Side

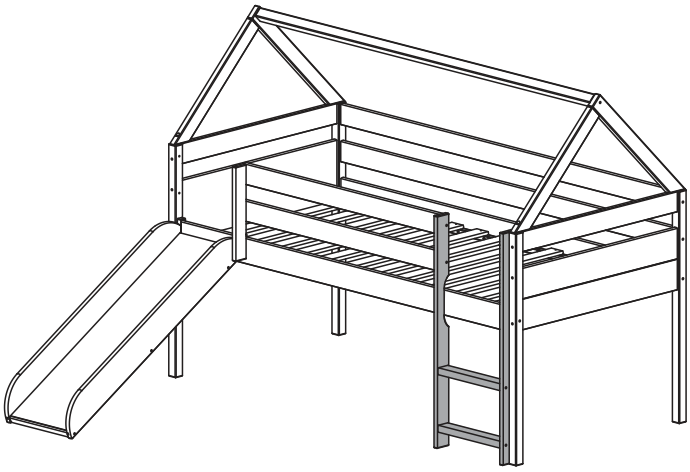

Right Side

5HY