ASSEMBLY INSTRUCTIONS

Fine Furniture for every stage of life

Full Bed Frame

REVISION 0: 08/28/2026

ASSEMBLY INSTRUCTIONS

ASSEMBLY TIPS:

1. Remove hardware from box and sort by size.
2. Please check to see that all hardware and parts are present prior to start of assembly.
3. Please follow attached instructions in the same sequence as numbered to assure fast & easy assembly.

WARNING!

1. Don't attempt to repair or modify parts that are broken or defective. Please contact the store immediately.
2. This product is for home use only and not intended for commercial establishments.

ASSEMBLY TIME | 15 MINUTES

PARTS IDENTIFICATION

A	HEAD FRAME	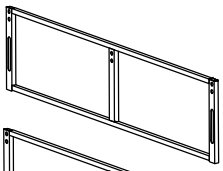	1PC
B	FOOT FRAME	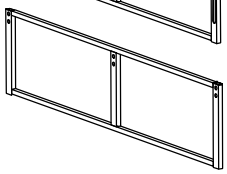	1PC
C	BED RAIL	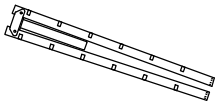	2PCS
D	CENTER RAIL	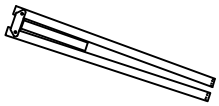	1PC
E	BED SLAT		10PCS
F	BED SLAT WITH HOLES	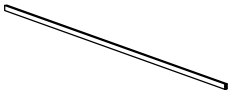	2PCS

HARDWARE IDENTIFICATION

1	BIG ALLEN WRENCH (M8 x 5 x 65mm - SR)		1PC
2	SMALL ALLEN WRENCH (M6 x 4 x 65mm - SR)		1PC
3	LONG BOLT (M8 x 35mm - SR)	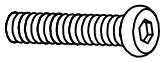	12PCS
4	SHORT BOLT (M6 x 25mm - SR)	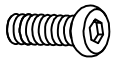	4PCS

NOTE:

Phillips head screw driver is required in the assemply process; however, manufacturer does not provide this item.

ASSEMBLY INSTRUCTIONS

STEP 1

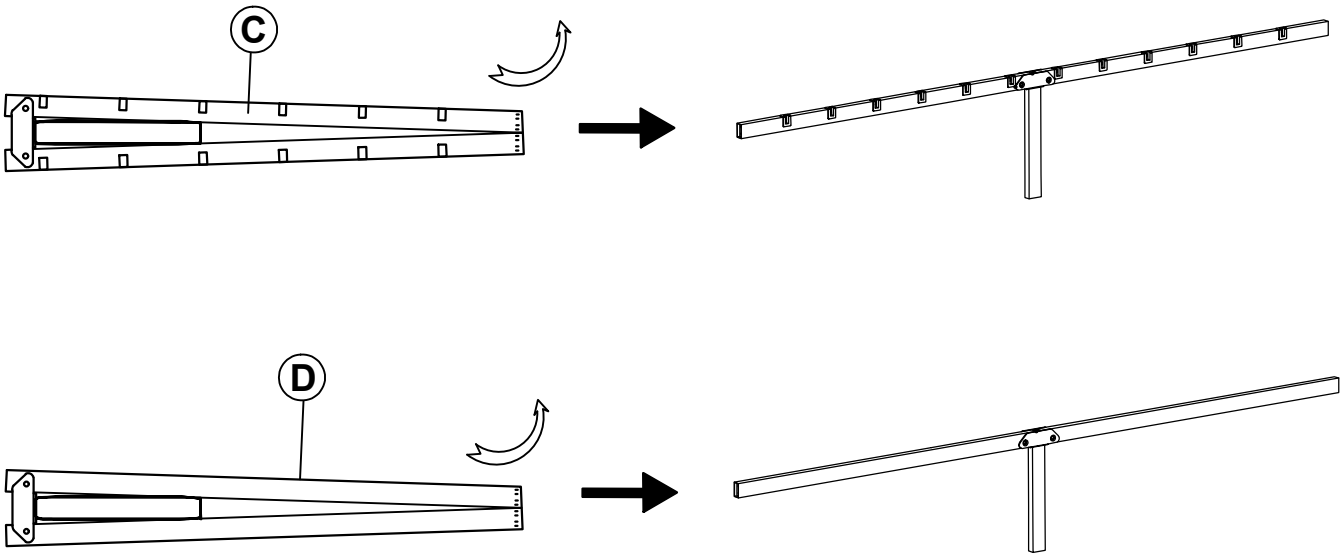

STEP 2

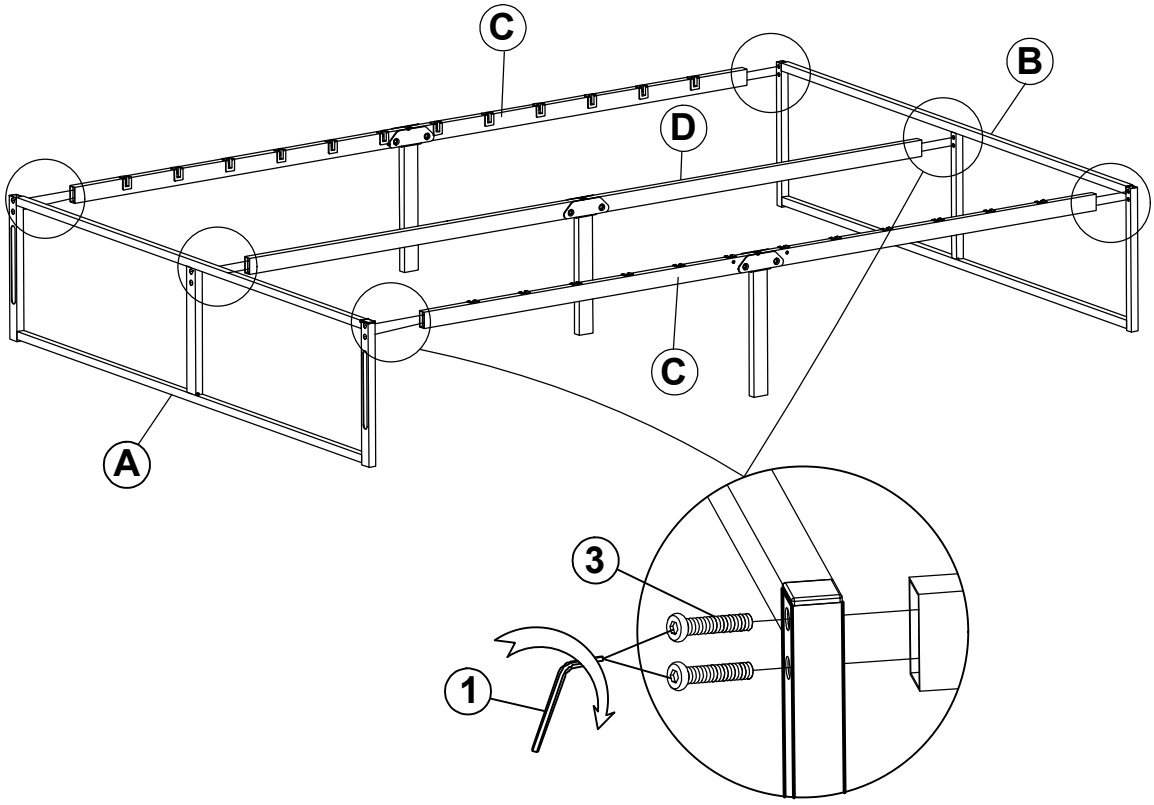

ASSEMBLY INSTRUCTIONS

STEP 3

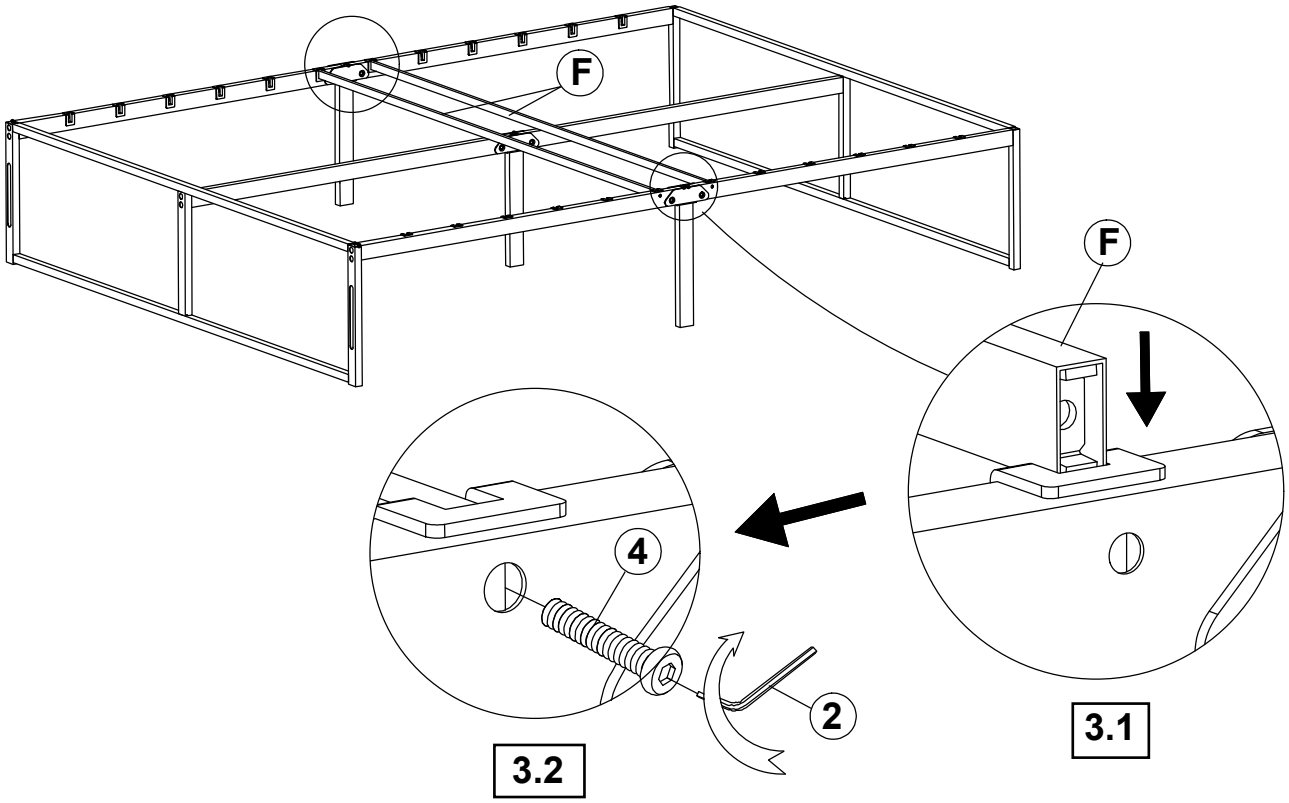

STEP 4

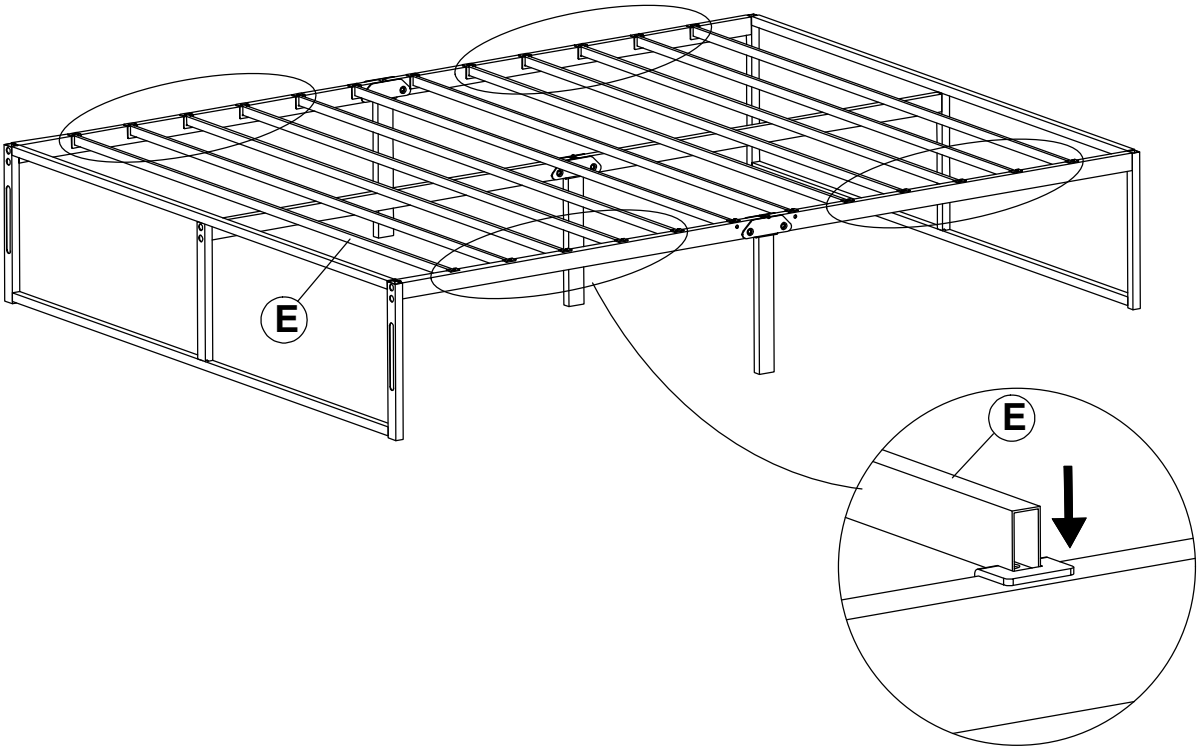

ASSEMBLY INSTRUCTIONS

STEP 5
COMPLETE

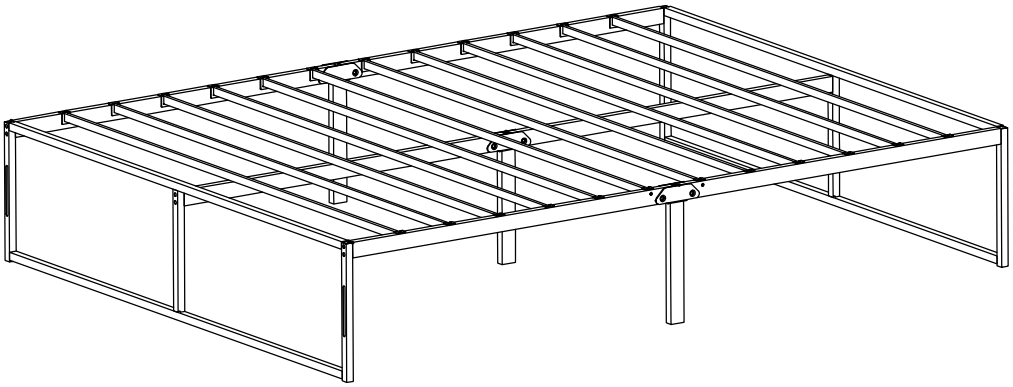

Inner Size: 53.50"W X 74.75"D

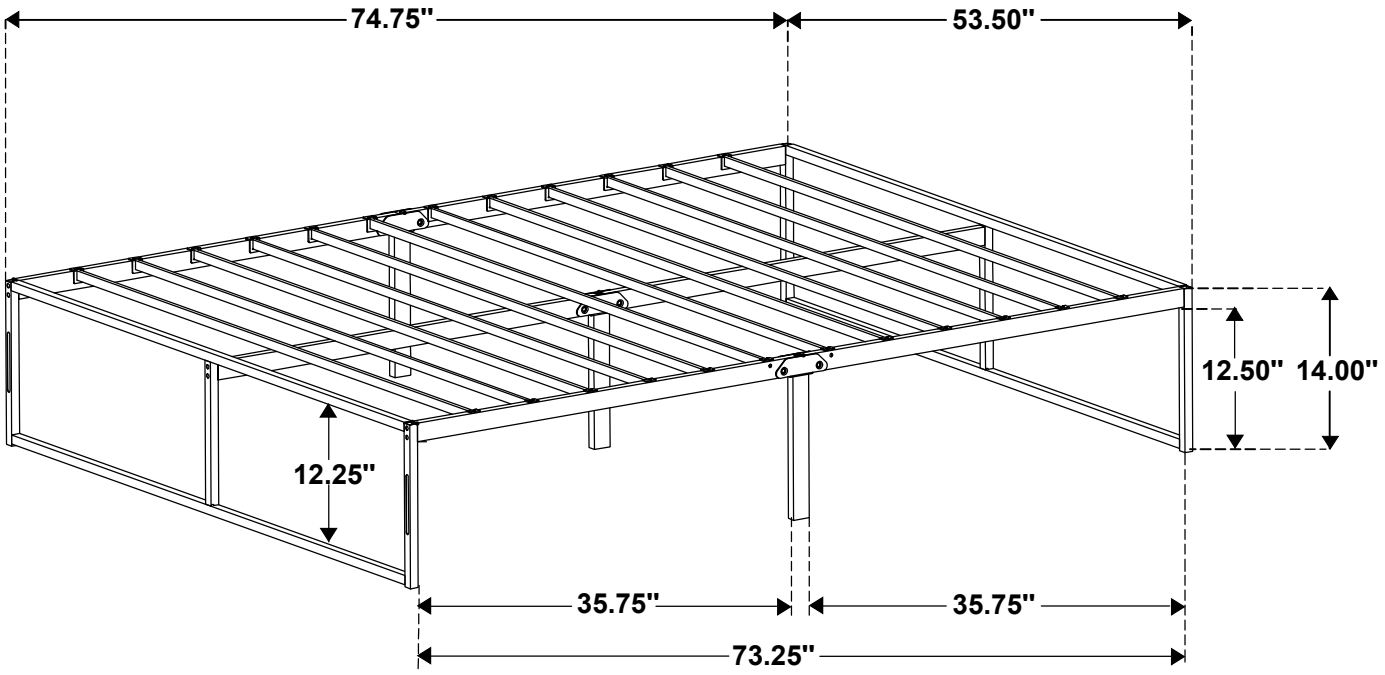

Note: Dimension tolerance ±5%