Installation & Assembly

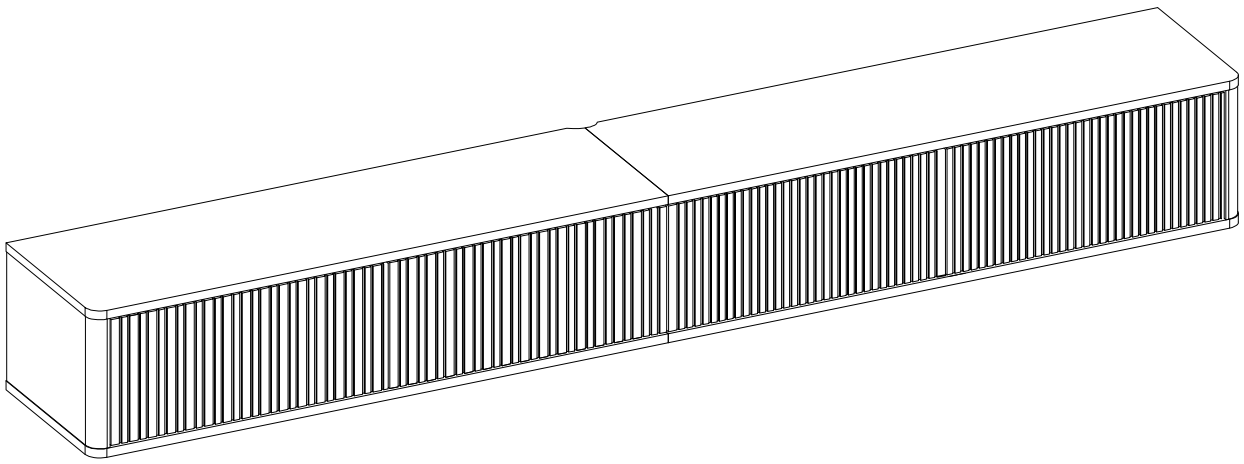

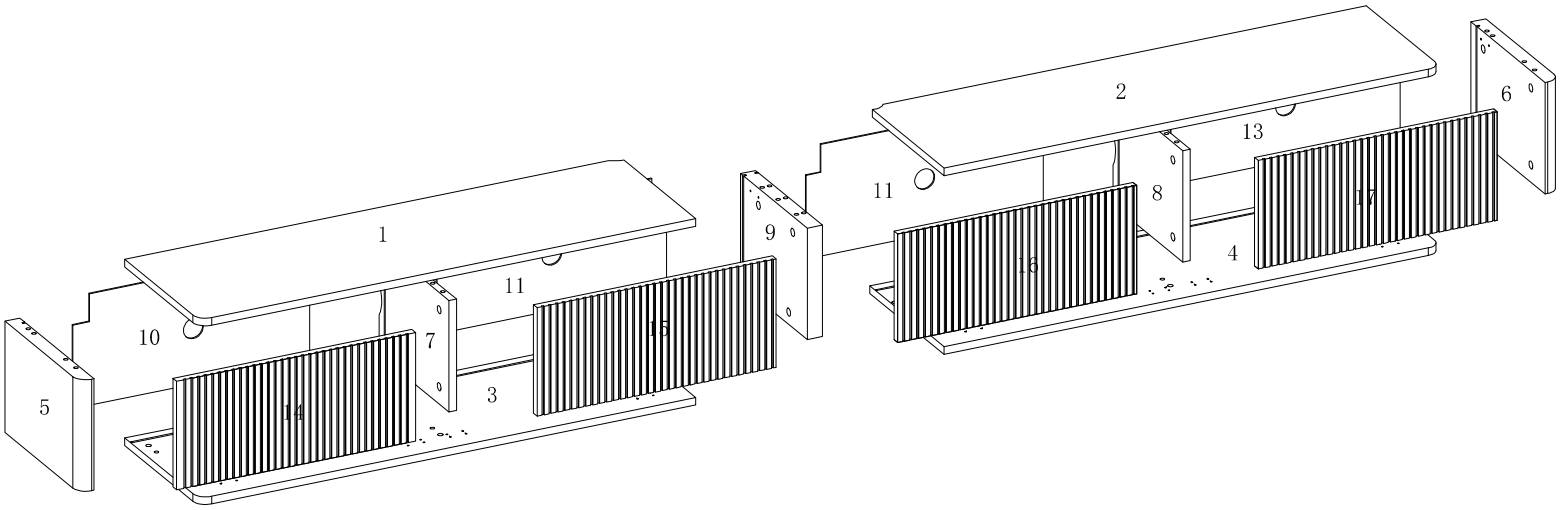

A A2 A1 24PCS	B 20PCS	C M3.5*12mm 92PCS	D M3.5*30mm 12PCS	E M3.5*40mm 20PCS	F 20PCS	G 4PCS	H 8PCS
J 16PCS	K K1 K2*8 K3*8 1PC	L L1 L2*2 1PC	M M1 M2 4PCS	N 4PCS	O 01*2 02*2 03 04 3PCS	P 24PCS	

1

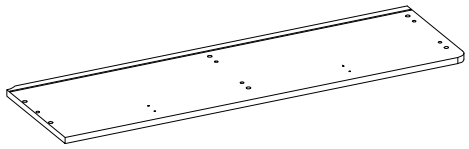

1000*300*15mm 1PC

2

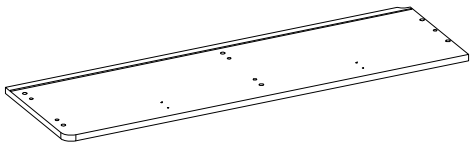

1000*300*15mm 1PC

3

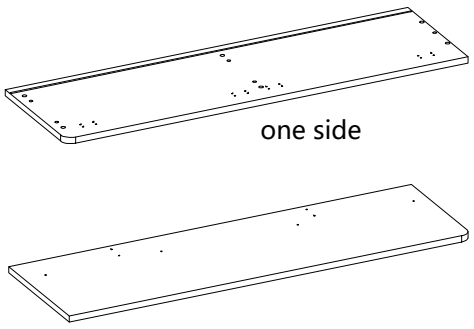

1000*300*15mm 1PC

4

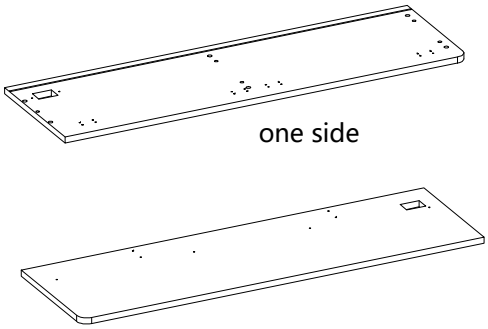

1000*300*15mm 1PC

5

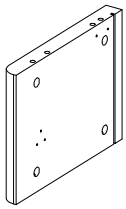

220*229*30mm 1PC

6

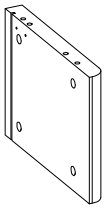

220*229*30mm 1PC

7

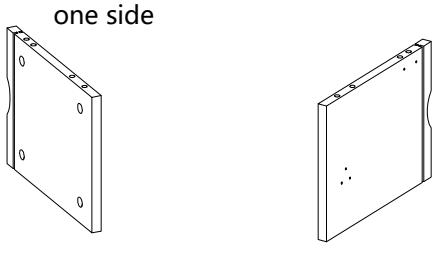

220*281*15mm 1PC

8

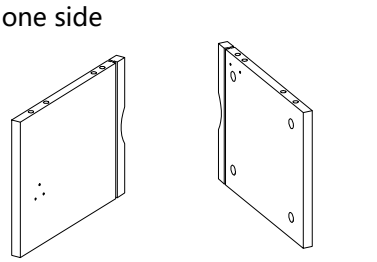

220*281*15mm 1PC

9

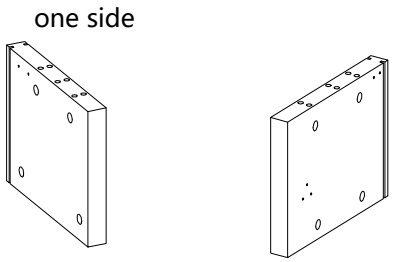

220*269*30mm 1PC

10 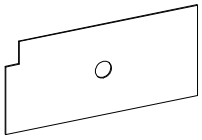 485.5*230*3mm 1PC	11 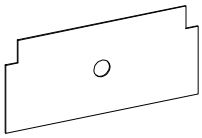 471.5*230*3mm 2PCS	13 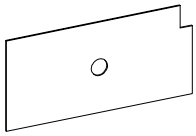 485.5*230*3mm 1PC
14 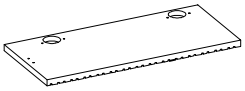 481*214*15mm 1PC	15 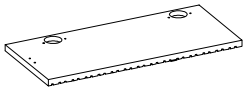 481*214*15mm 1PC	16 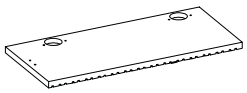 481*214*15mm 1PC
17 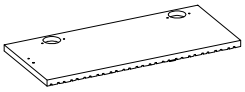 481*214*15mm 1PC		

STEP 1

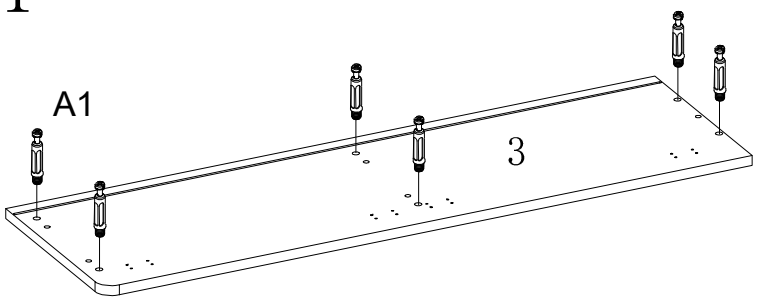

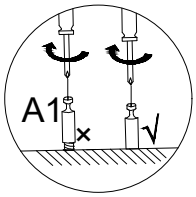

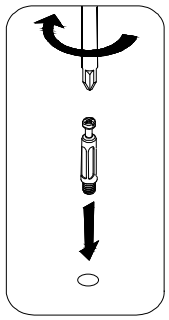

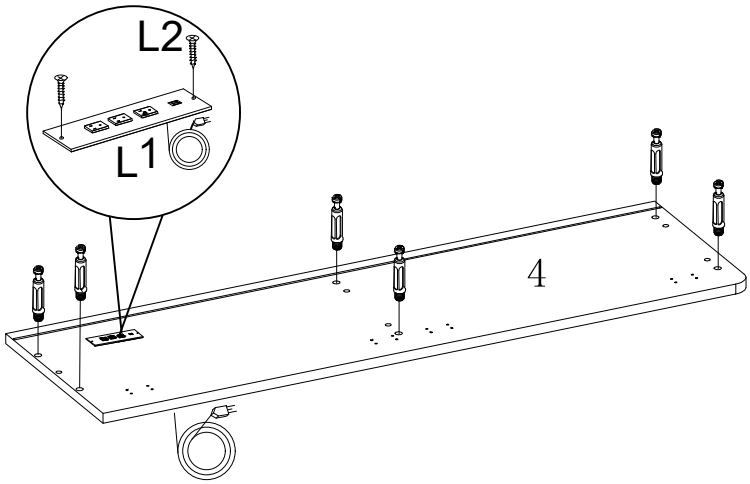

	L ×1PC		A1×12PCS

STEP 2

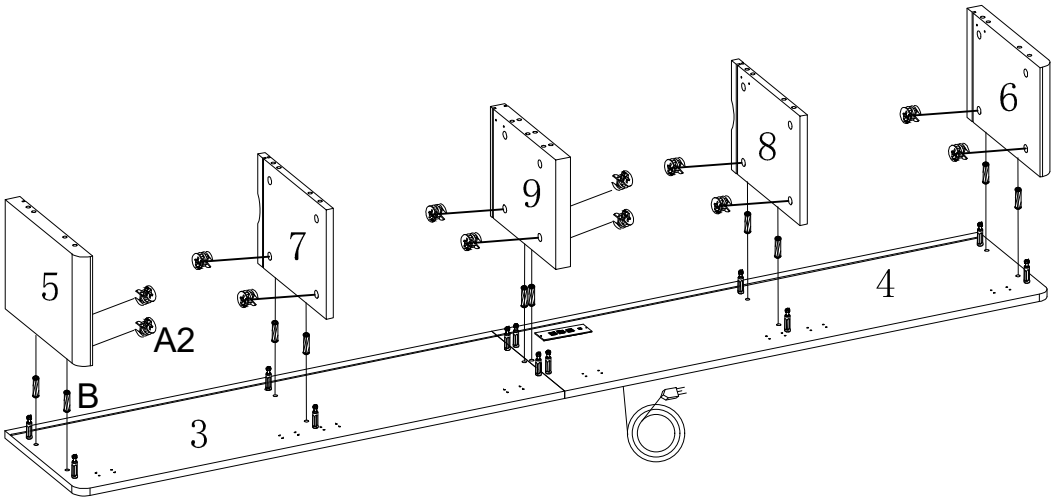

	A2×12PCS		B×10PCS

STEP 3

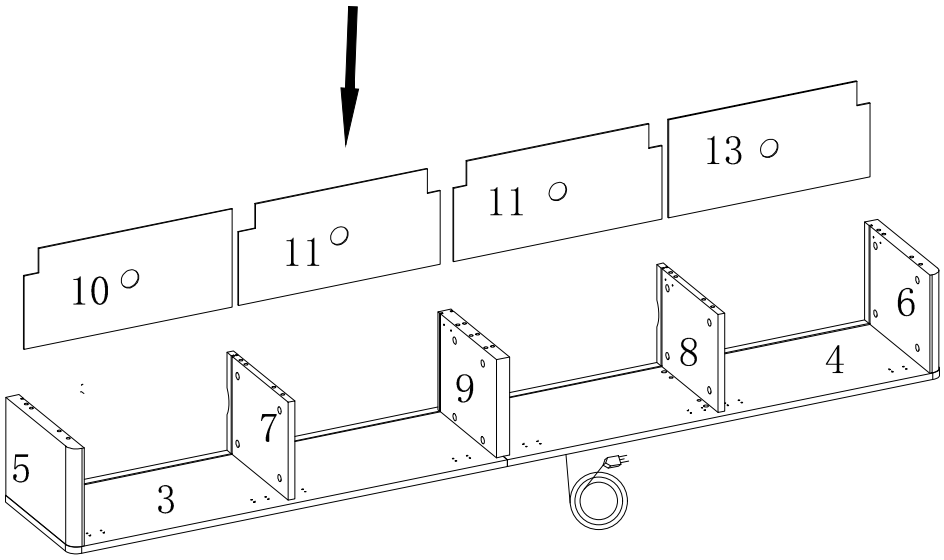

STEP 4

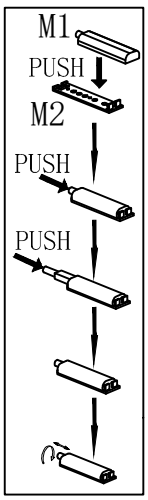

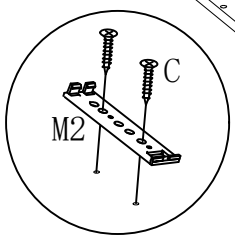

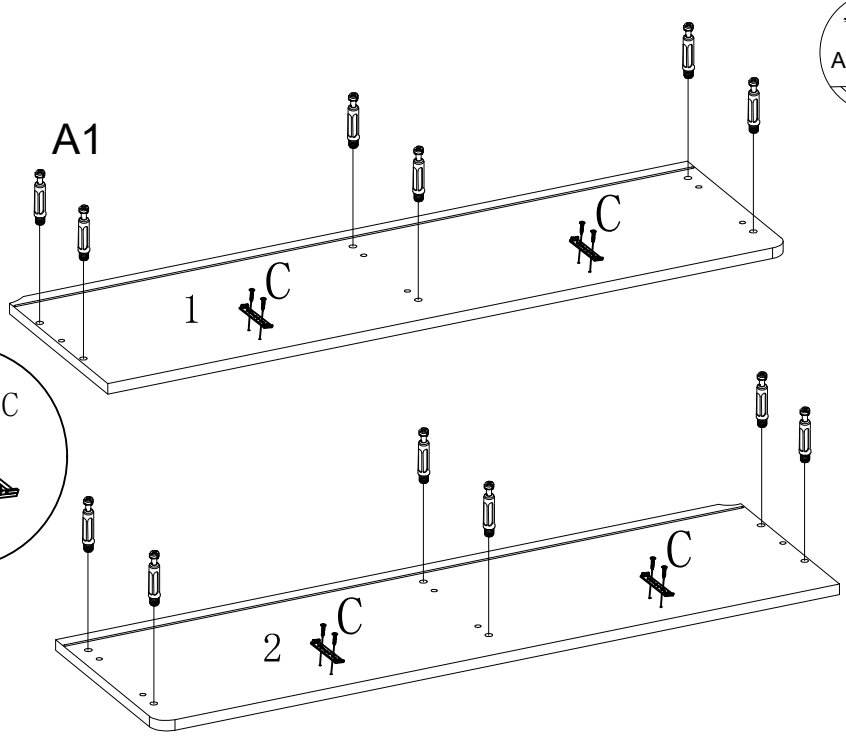

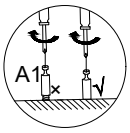

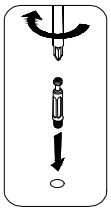

	M × 4PCS		C × 8PCS		A1× 12PCS

STEP 5

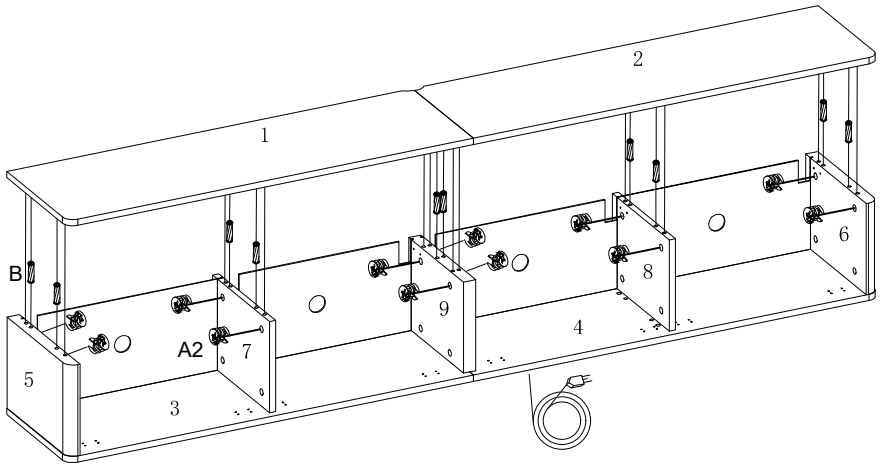

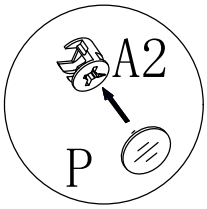

	P×24PCS		A2×12PCS		B×10PCS

STEP 6

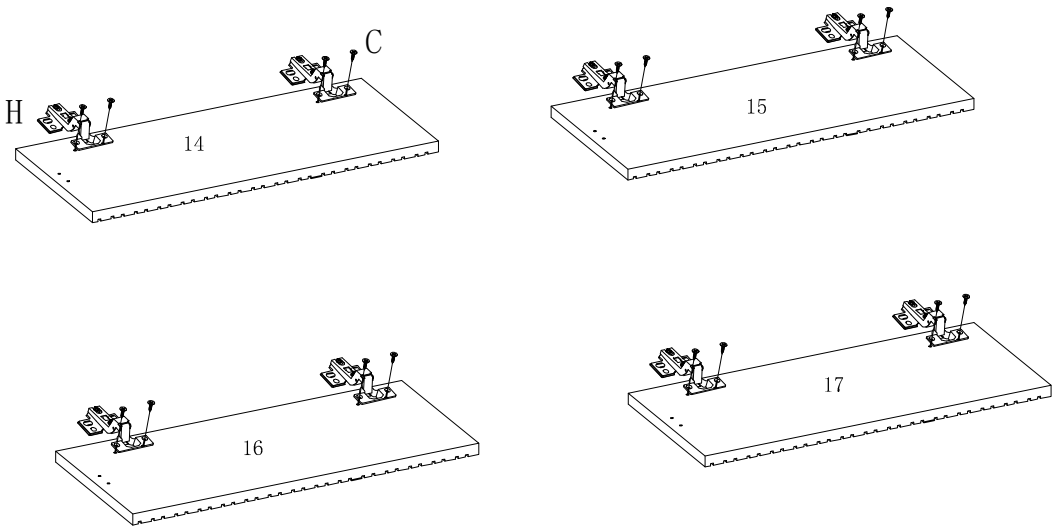

	H ×8PCS		C ×16PCS

STEP 7

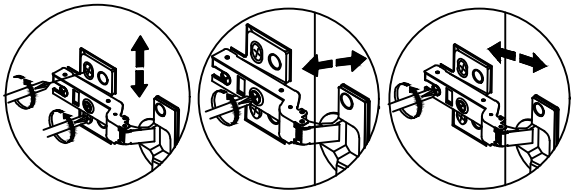

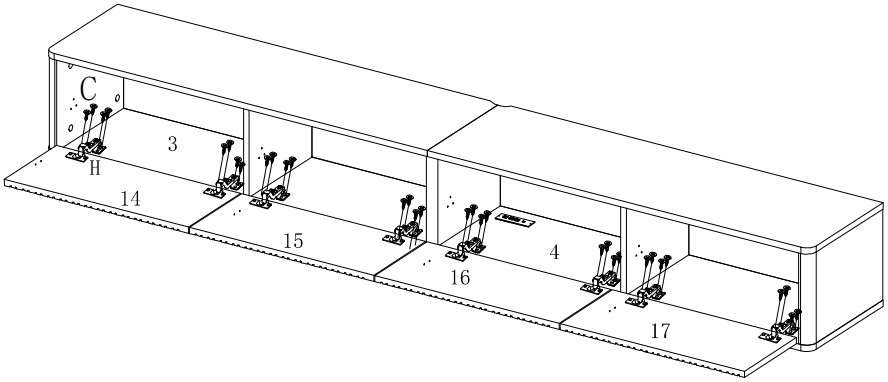

C ×32PCS	

STEP 8

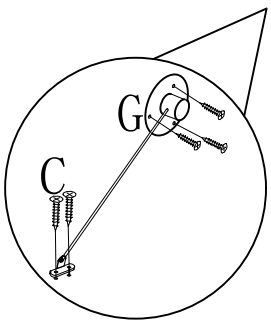

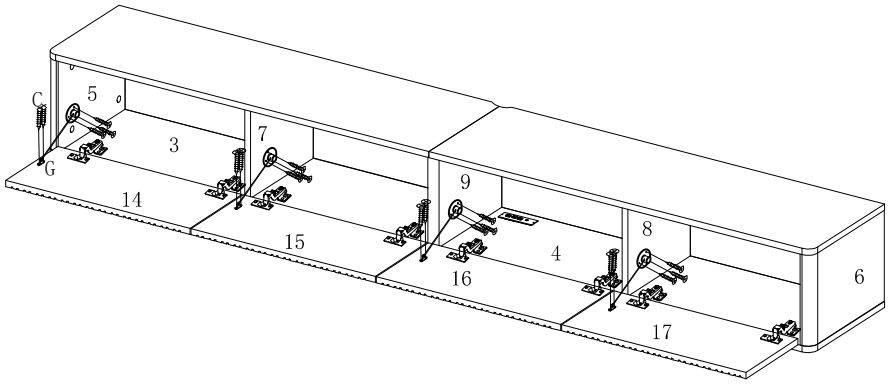

	G×4PCS	C ×20 PCS	

STEP 9

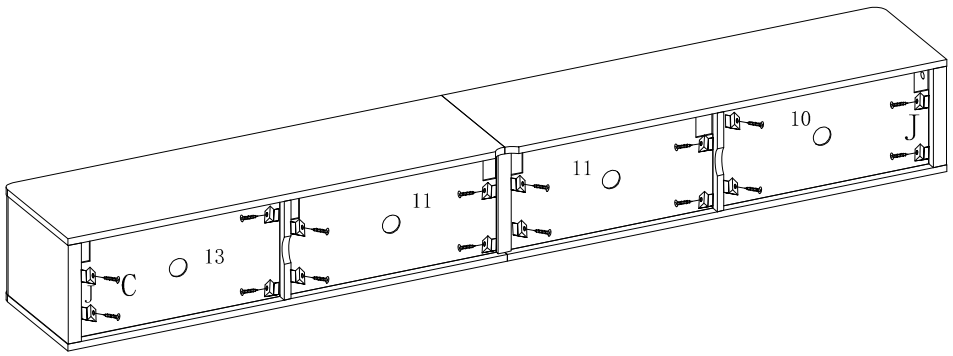

	J×16PCS		C ×16 PCS

STEP 10

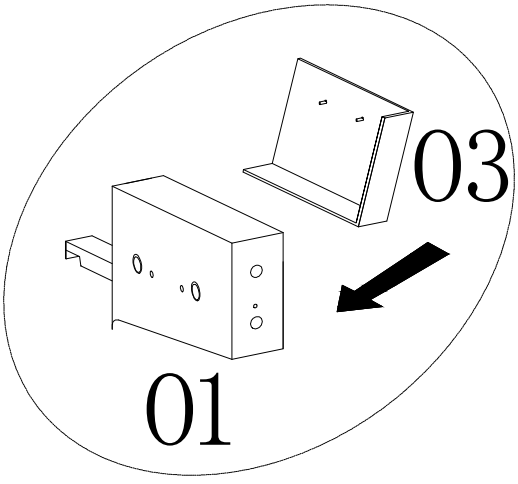

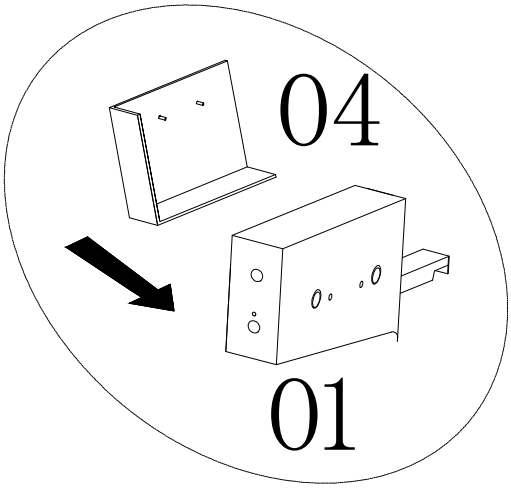

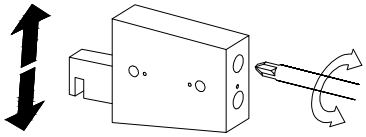
The up and down can be adjusted !

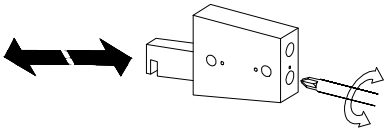
The length can be adjusted !

STEP 11

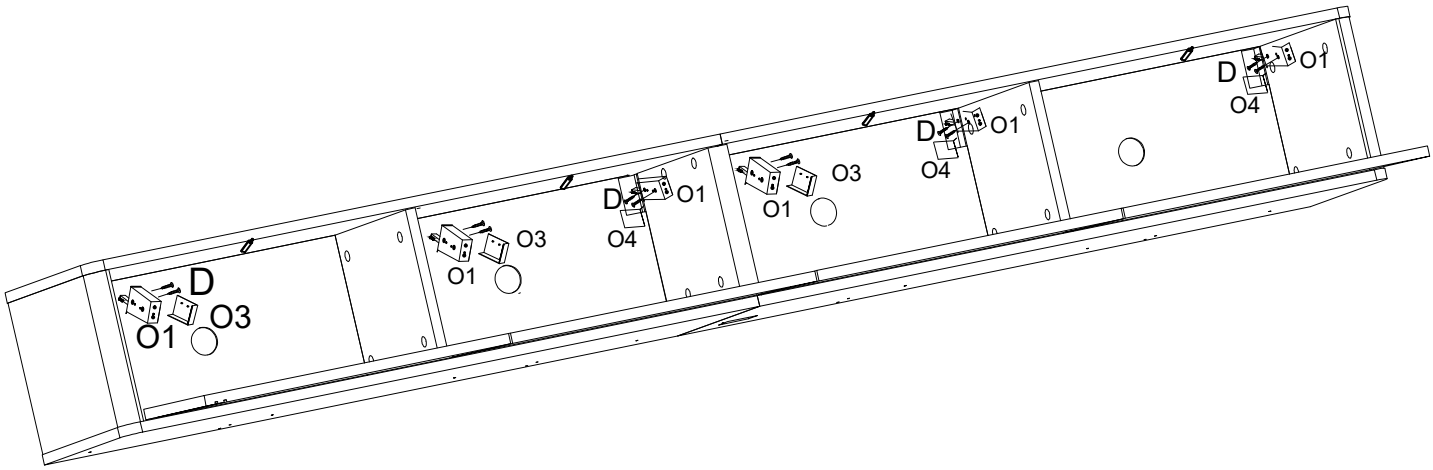

	D×12PCS		03× 3PCS
	01× 6PCS		04× 3PCS

STEP 12

Remove the protective film from the hardware K

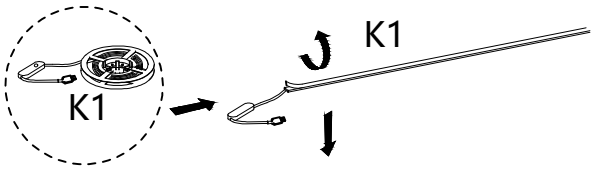

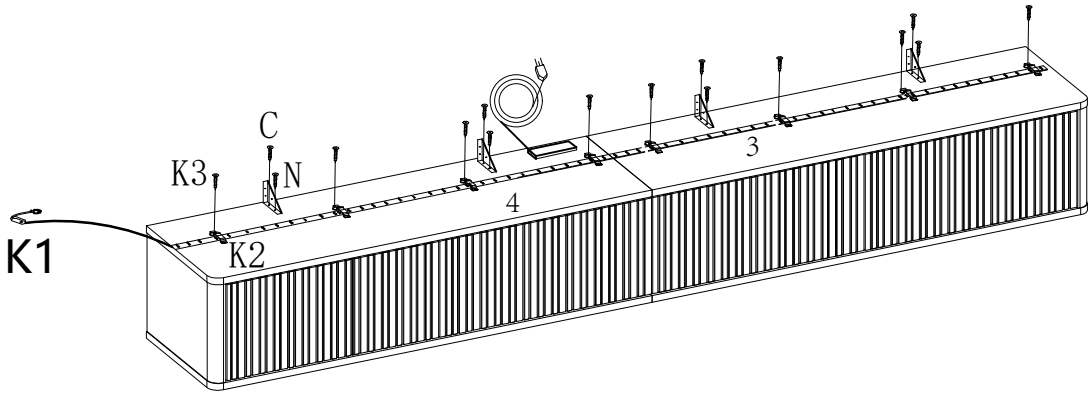

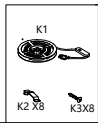	K× 1PC		N ×4 PCS		C ×8 PCS

STEP 13

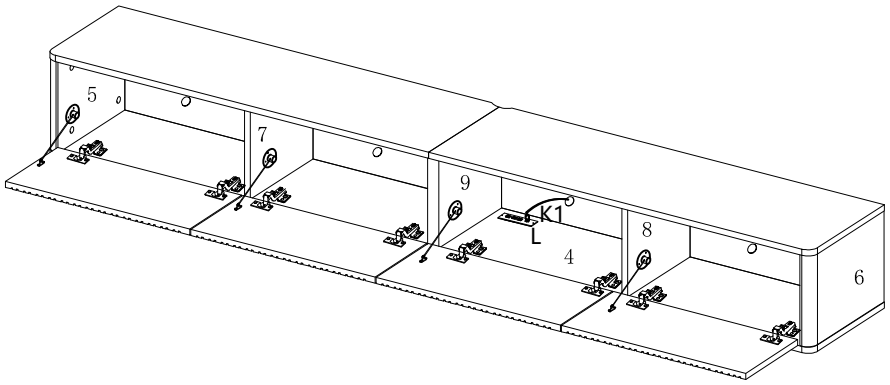

STEP 14

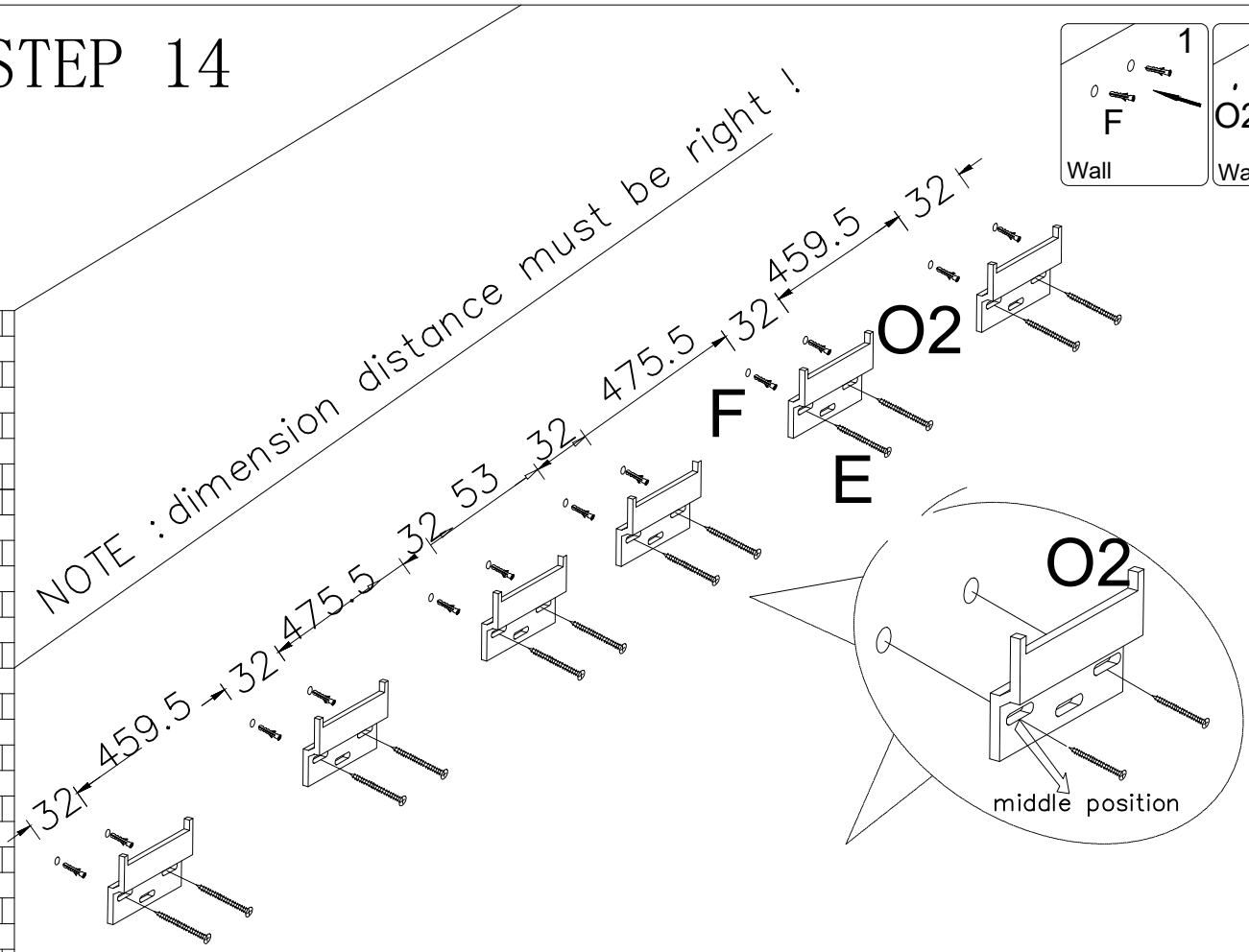

	E×12PCS		F×12PCS		02×6PCS

STEP 15

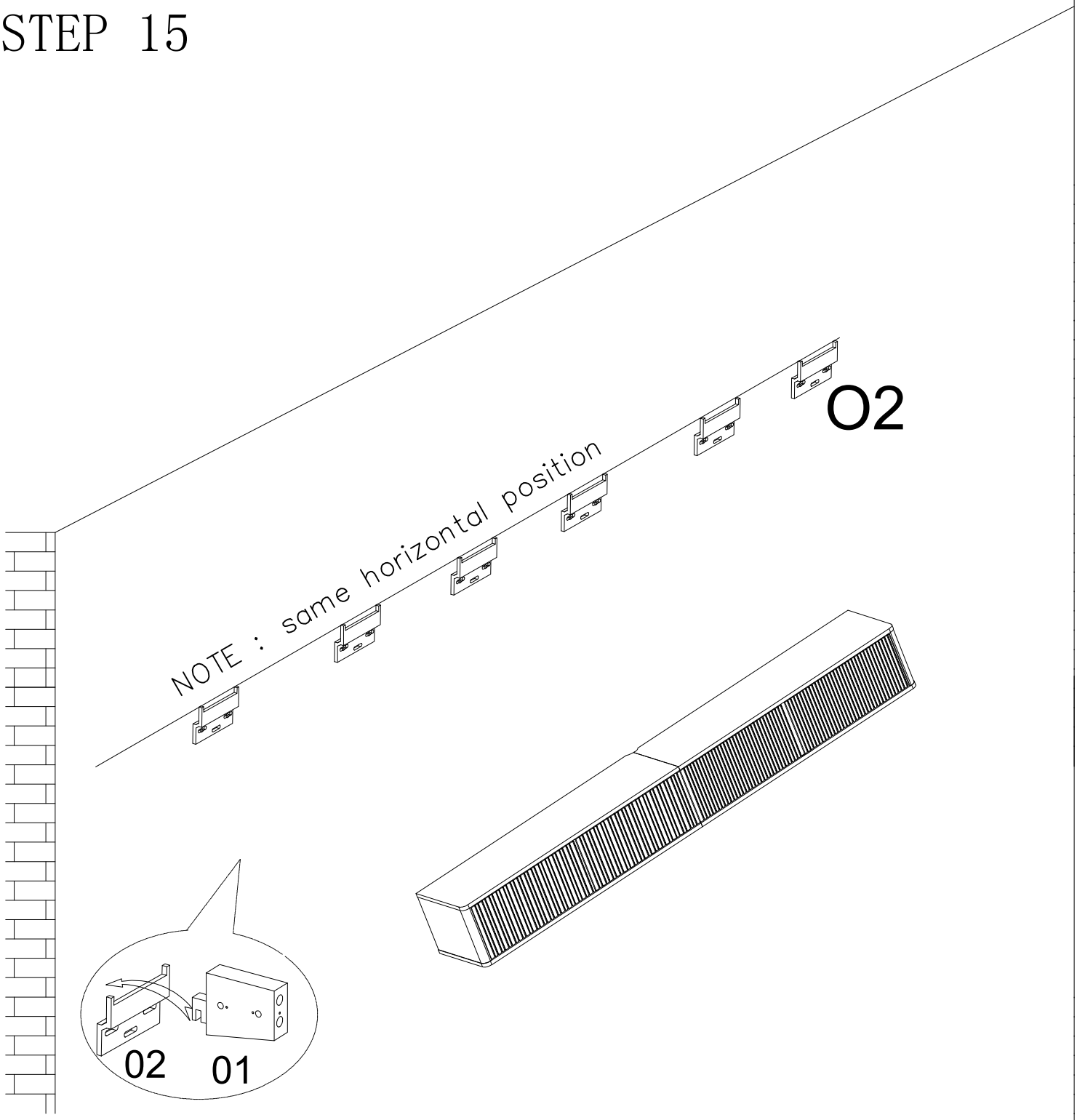

NOTE : install the cabinet on the 02 !

STEP 16 NOTE : dimension distance must be right !

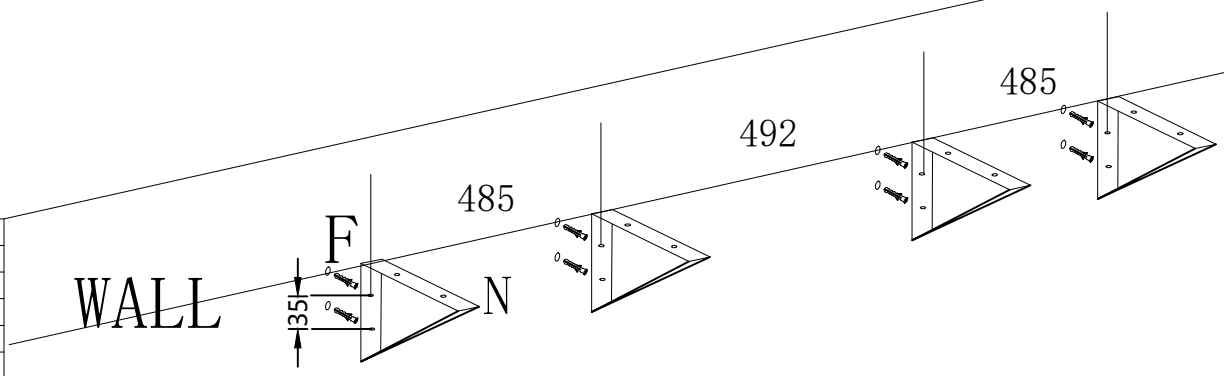

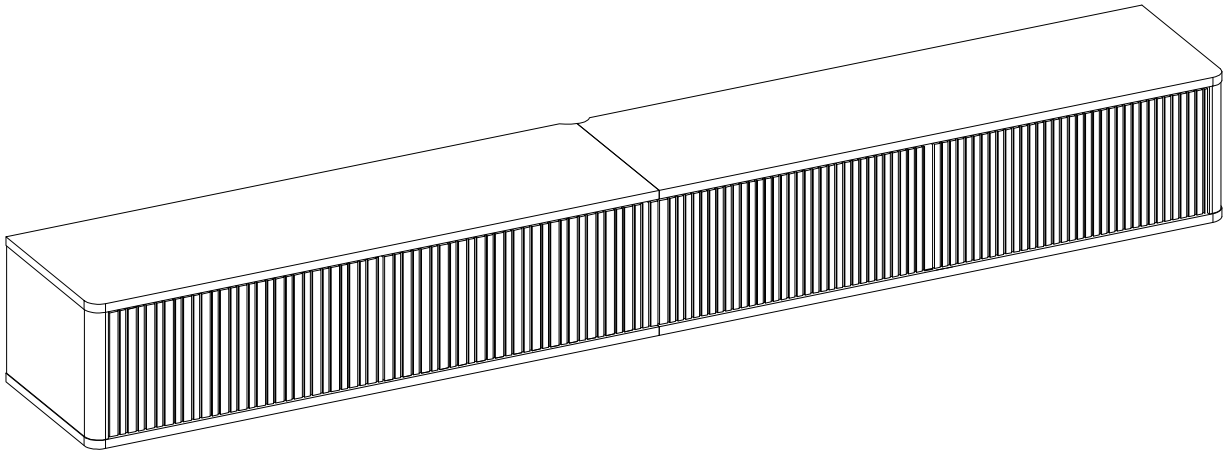

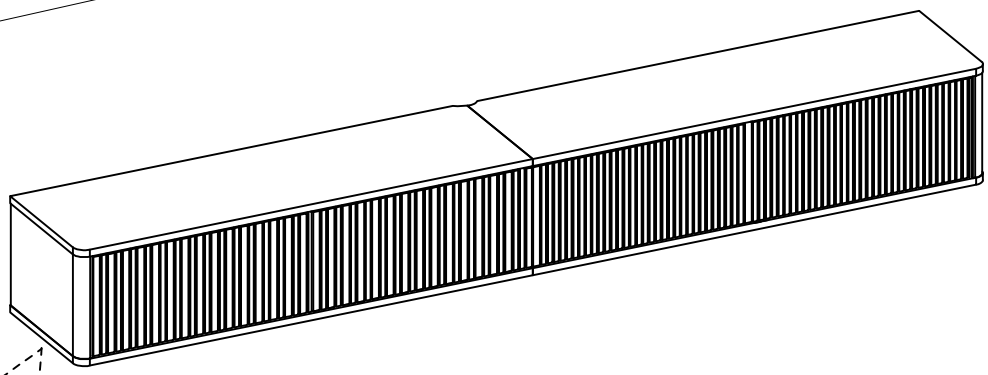

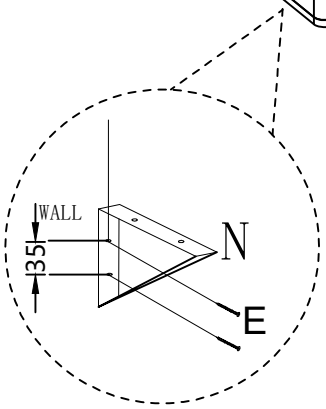

	E× 8PCS		F× 8PCS