# COMPONENT LIST - ARMCHAIR*2

| Item no. | Reference Image | Description | Qty. |
|---|---|---|---|
| A | 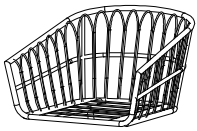 | Chair Seat | 1 |
| B | | Chair Leg | 1 |
| G | | Seat Cushion | 1 |
| H | 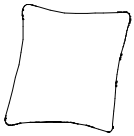 | Back Cushion | 1 |
| J | | Washer | 4 |
| K | 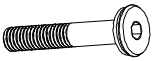 | M6X40 Head Cap Screws | 4 |
| N | | Allen Key | 1 |

**NOTE:**
When tightening the screws, tighten sequentially.
DO NOT tighten any screws fully and then move on to the next one. This may cause the frame to warp.
If there is still wobbles or screw holes cannot be aligned,loosen the screws and execute this same process.
If the Chair is not stable it could lead to damage to the product.

1

Attach the Chair Leg (B) to the Chair Seat (A) by securing with M6X40 Head cap screws (K) and Washers (J). Do this in 4 places.

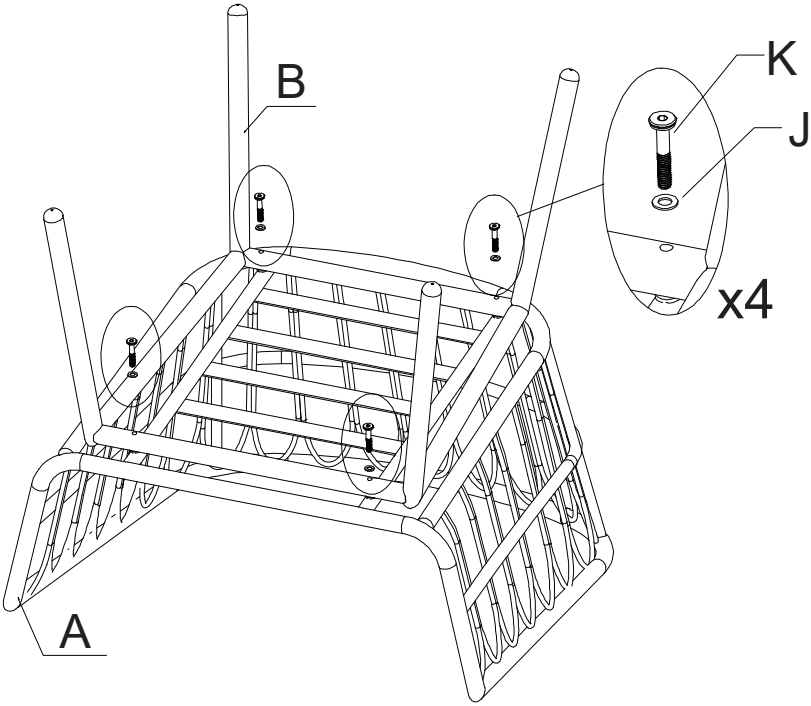


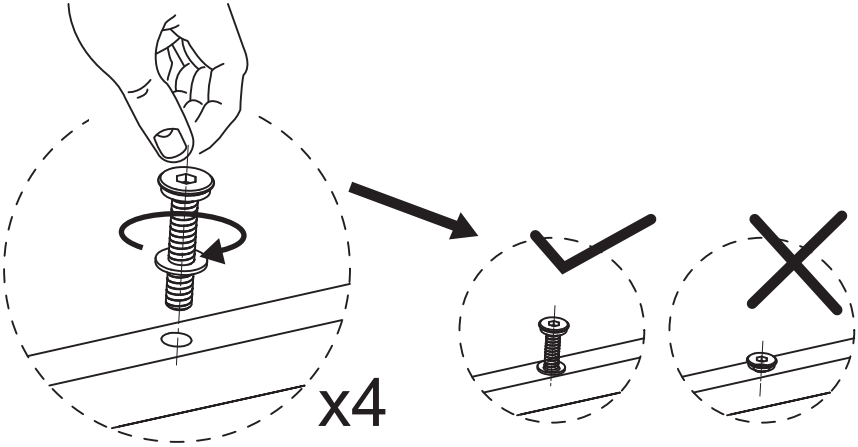


**NOTE**:DO NOT TIGHTEN THE BOLTS COMPLETELY.

## 2

Tighten all 4 Screws into place with Allen Key (N).

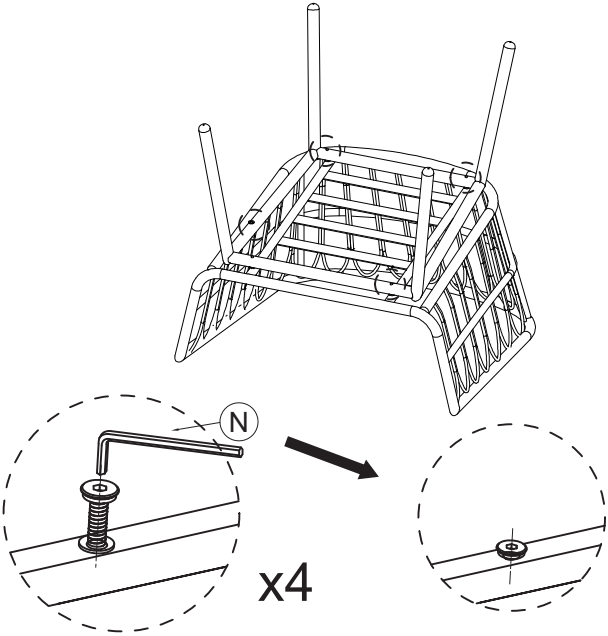


**NOTE**:IF ANY SCREW HOLES CANNOT BE ALIGNED, LOOSEN ALL THE SCREWS AND GO BACK STEP 1 AND RESTART ASSEMBLY.

## 3

Place the chair on a level surface, then place Seat Cushion (G) & Back Cushion (H) on the chair. Your chair is ready for use.

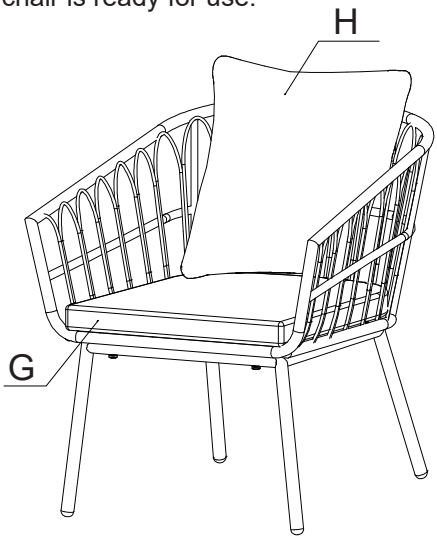

# COMPONENT LIST - TABLE

| Item no. | Reference Image | Description | Qty. |
|---|---|---|---|
| C | | Table Glass | 1 |
| D | | Table Top | 1 |
| E | | Table Leg | 1 |
| F | | Table Leg | 1 |
| L | | M6X30 Head Cap Screws | 1 |
| M | | M6X20 Head Cap Screws | 4 |
| J | | Washer | 5 |
| N | | Allen Key | 1 |

**NOTE:**
When tightening the screws, tighten sequentially.
DO NOT tighten any screws fully and then move on to the next one. This may cause the frame to warp.
If there is still wobbles or screw holes cannot be aligned,loosen the screws and execute this same process.
If the Table is not stable it could lead to damage to the product.

1

Attach the Table Legs (E) &(F) to the Table Top (D) by securing with M6X20 Head cap screws (M) and Washers (J). Do this in 4 places.

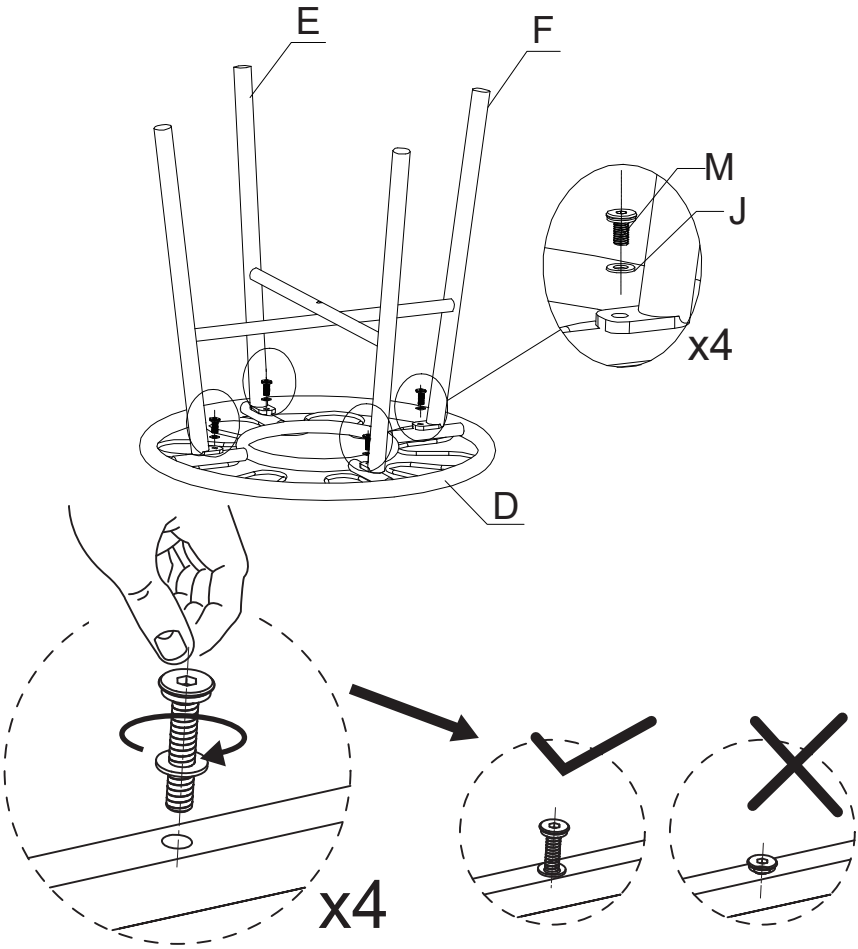


**NOTE**:DO NOT TIGHTEN THE BOLTS COMPLETELY.

## 2

Attach the Table Leg (E) to the Table Leg (F) by securing with M6X30 Head cap screws (L) and Washers (J). Do this in 1 place.

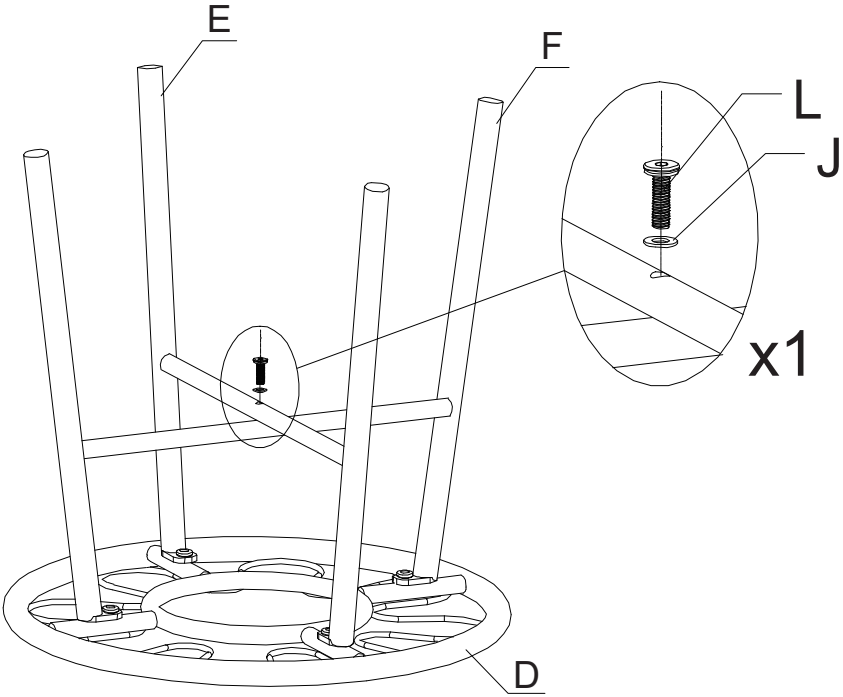


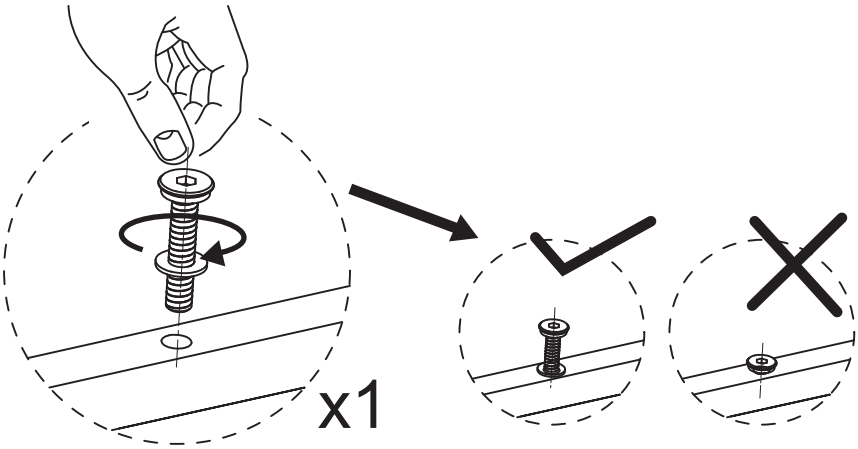


**NOTE**:DO NOT TIGHTEN THE BOLTS COMPLETELY.

## 3

Tighten all 5 Screws into place with Allen Key (N).

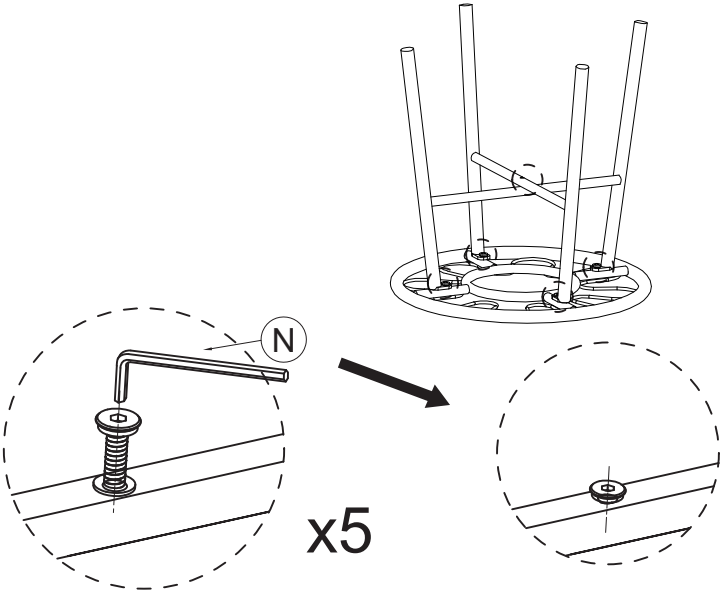


**NOTE**:IF ANY SCREW HOLES CANNOT BE ALIGNED, LOOSEN ALL THE SCREWS AND GO BACK STEP 1 AND RESTART ASSEMBLY.

## 4
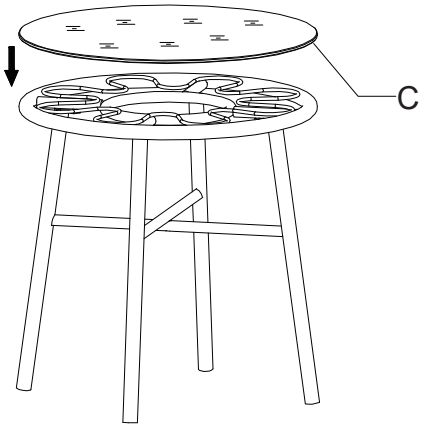
Place the table on a level surface. Put the Table Glass (C) on the Table Top Frame (D). Now your Table is ready for use.