COASTER
FINE FURNITURE

ASSEMBLY INSTRUCTIONS
COASTER FINE FURNITURE

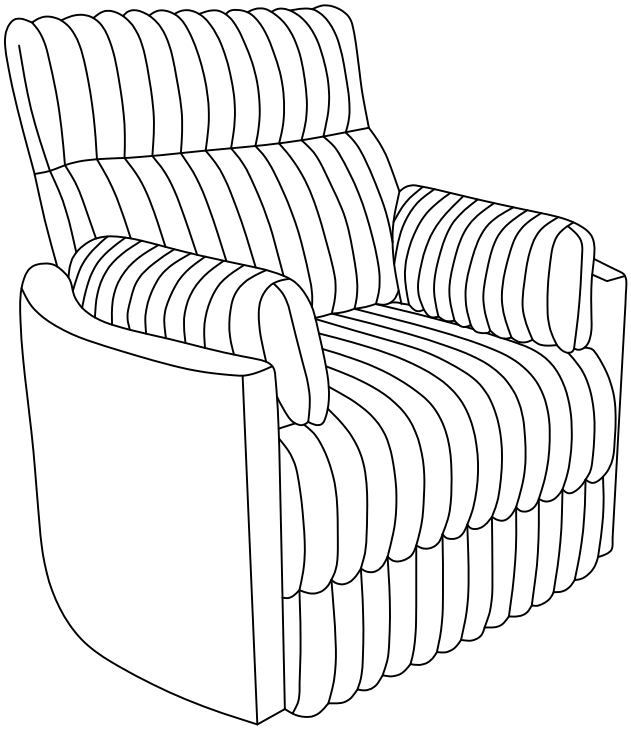

Fine Furniture for every stage of life

600151
RECLINER

REVISION 0: 08/07/2026

ITEM :600151

ASSEMBLY INSTRUCTIONS

ASSEMBLY TIPS:

1.Remove hardware from box and sort by size.
2.Please check to see that all hardware and parts are present prior to start of assembly.
3.Please follow attached instruction in the same sequence as numbered to assure fast & easy assembly.

WARNING!
1.Don't attempt to repair or modify parts that are broken or defective. Please contact the store immediately.
2.This product is for home use only and not intended for commercial establishment.

ASSEMBLY TIME	15 MINUTES

PARTS IDENTIFICATION

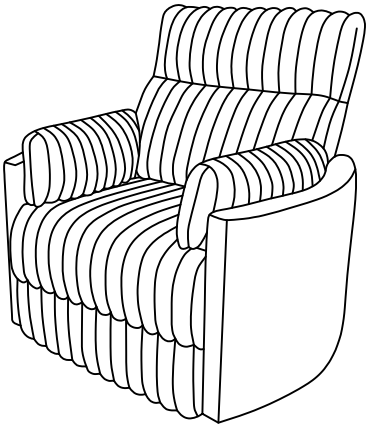

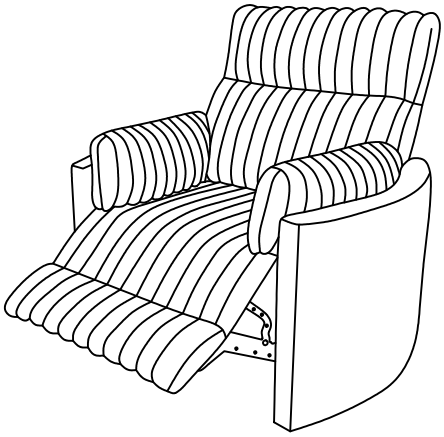

A BASE	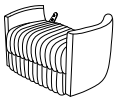	**1 PC**	**C PILLOW**		**2 PCS**
B BACK	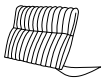	**1 PC**			

COASTERFURNITURE.COM

ITEM :600151
ASSEMBLY INSTRUCTIONS

COASTER FINE FURNITURE

STEP 1

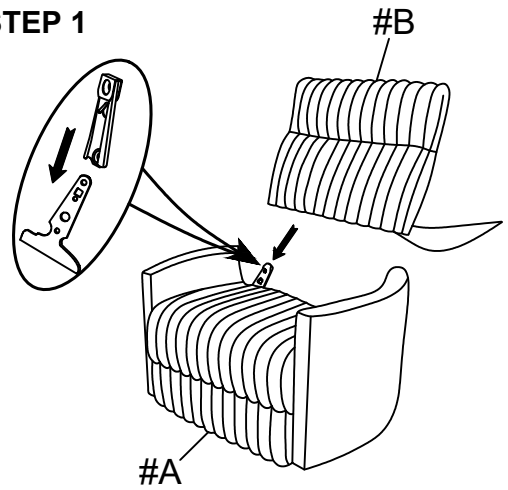

STEP 2

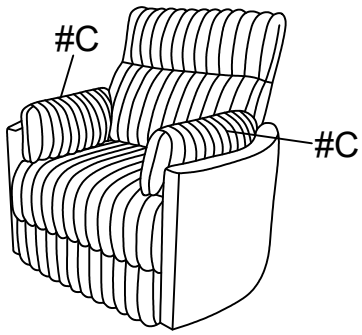

STEP 3

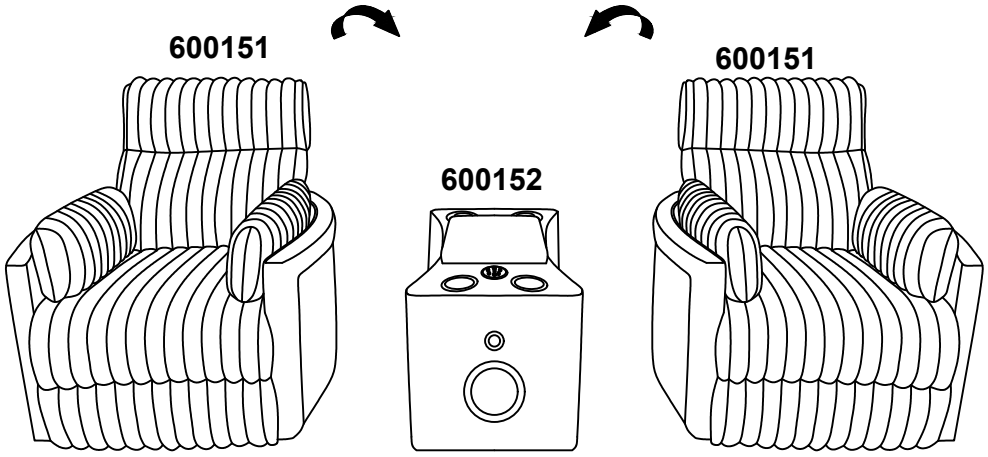

STEP 4

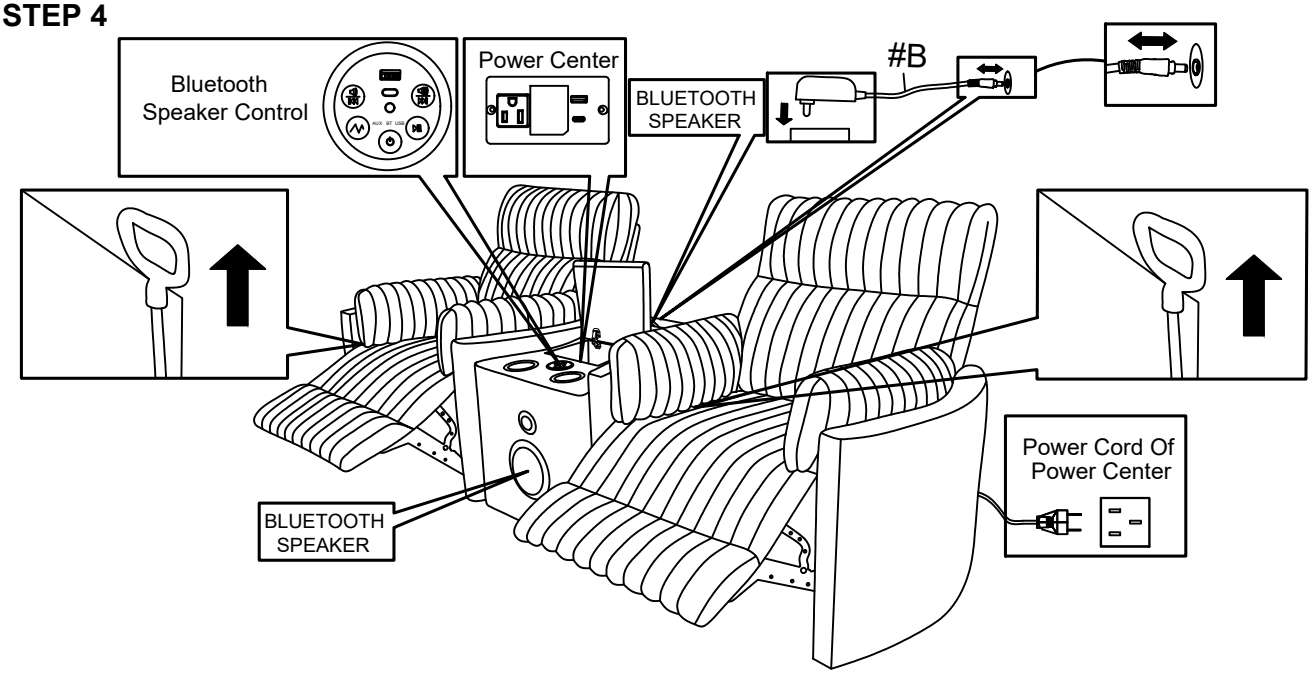

COASTERFURNITURE.COM

600151

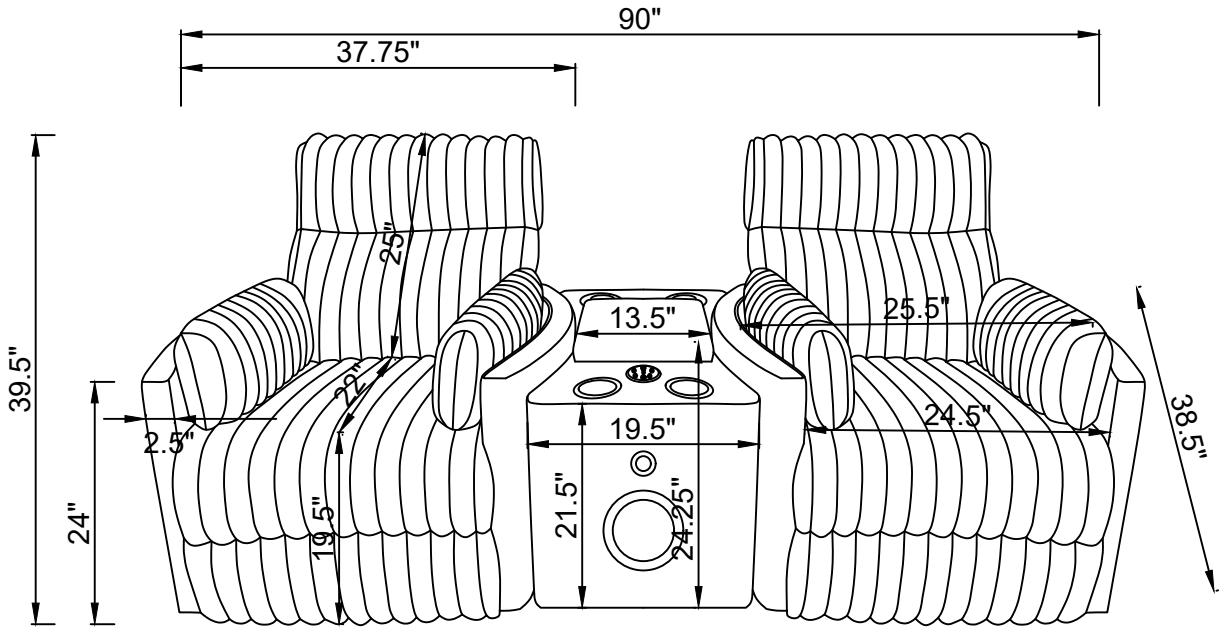

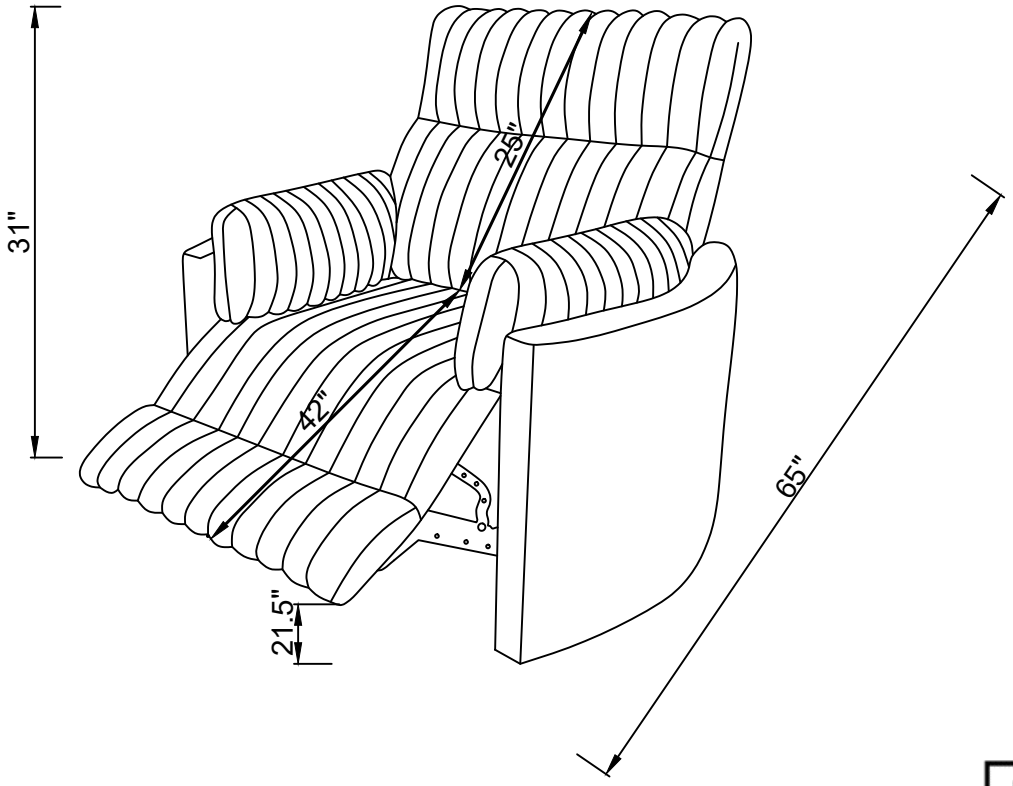

Note: Dimension tolerance ±5%

COASTERFURNITURE.COM

ASSEMBLY INSTRUCTIONS
COASTER FINE FURNITURE

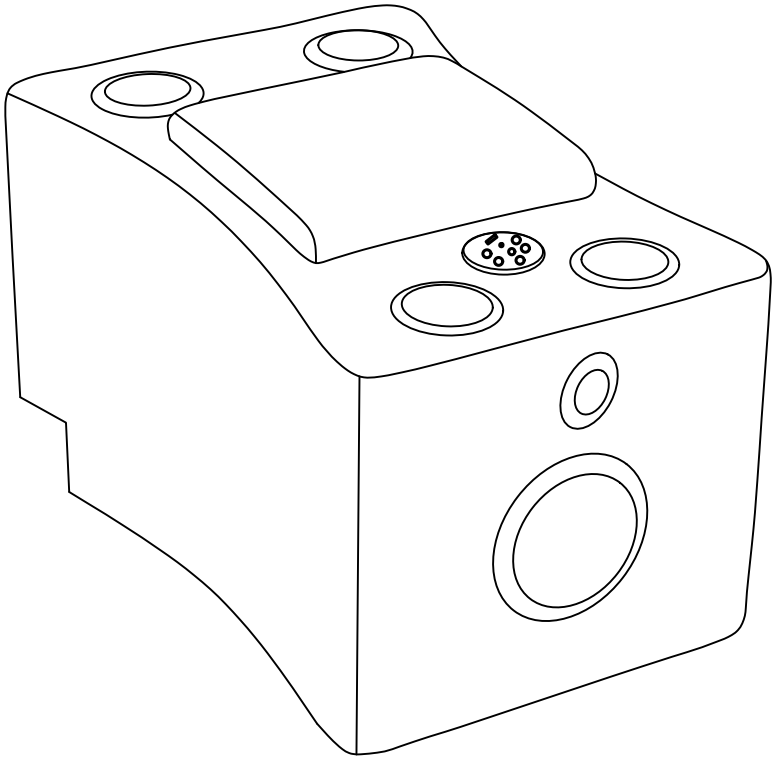

Fine Furniture for every stage of life

600152
HOME THEATER CONSOLE

REVISION 0: 08/07/2026

ITEM :600152

ASSEMBLY INSTRUCTIONS

ASSEMBLY TIPS:

1.Remove hardware from box and sort by size.
2.Please check to see that all hardware and parts are present prior to start of assembly.
3.Please follow attached instruction in the same sequence as numbered to assure fast & easy assembly.

WARNING!
1.Don't attempt to repair or modify parts that are broken or defective. Please contact the store immediately.
2.This product is for home use only and not intended for commercial establishment.

ASSEMBLY TIME	15 MINUTES

PARTS IDENTIFICATION

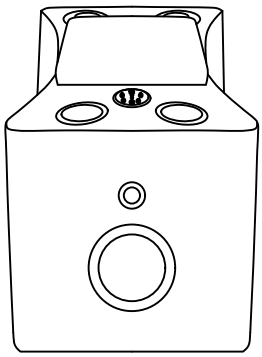

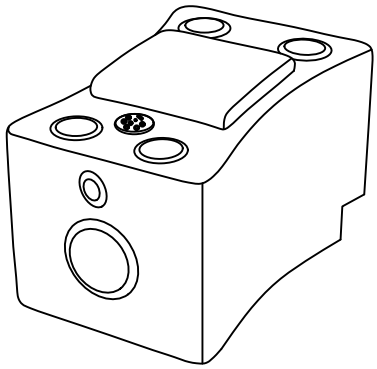

A CONSOLE **1 PC**

B SPEAKER POWER SUPPLY **1 PC**

COASTERFURNITURE.COM

INSTRUCTIONS

Features

Thank you, our distinguished customer, for choosing the latest generation of multi-functional sofa music system, which enables automatic switching from one mode to another (BLUETOOTH / USB / AUX),with the perfect touch buttons plus a strong 2.1bass amp,with good sound quality and beautiful appearance. We sincerely hope that it could give you an extraordinary experience of enjoying the music at this digital age.

The main functions:

USB: USB interface supports playing music on Flash disk,

AUX: Supports playing music on mobile phone, computer, television and other audio input via AUX cable.

Precautions:

Before use, please read the instructions to ensure proper use of this product. For better service,the customer's product performance specifications are subject to change,and the content of this manual may also be updated without further notice. To maintain good performance of the product, do not use it in too cold, too hot,dusty or humid environments

Control Panel

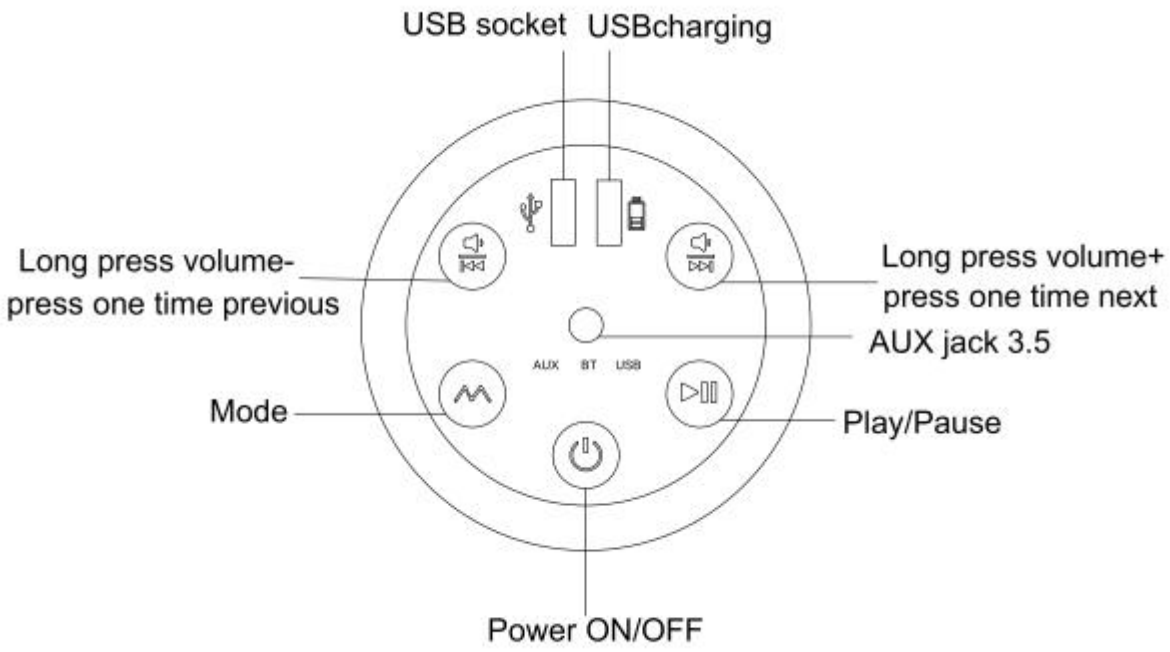

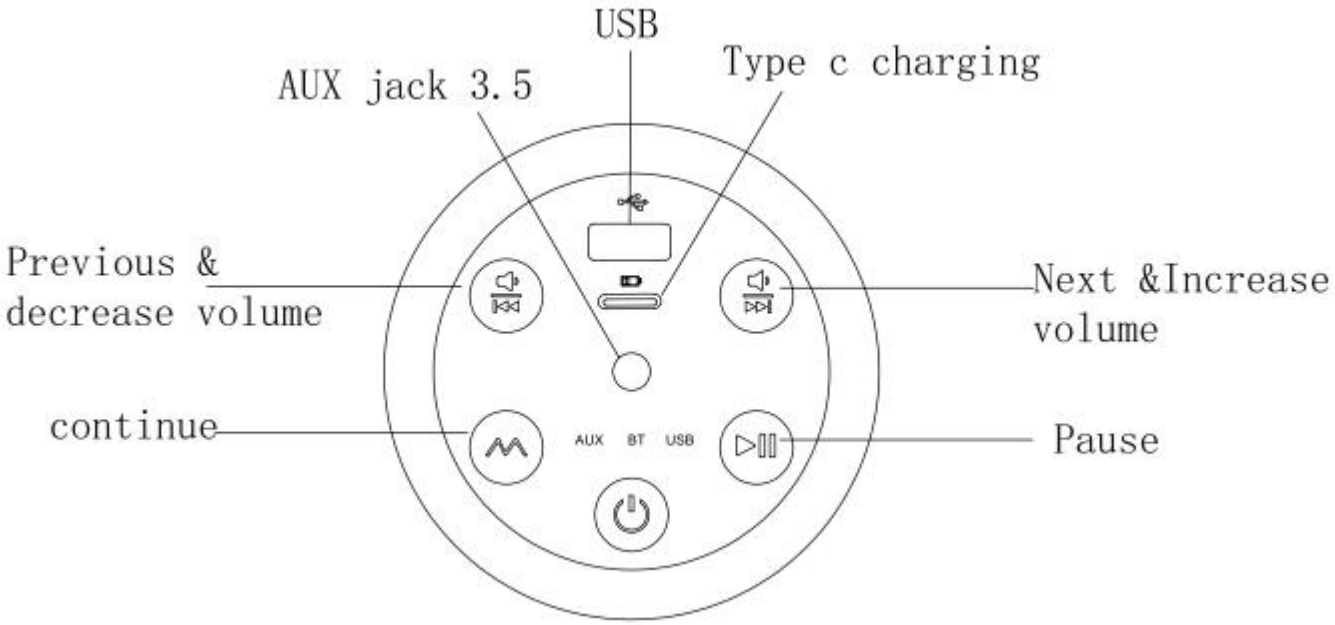

INSTALLATION GUIDE

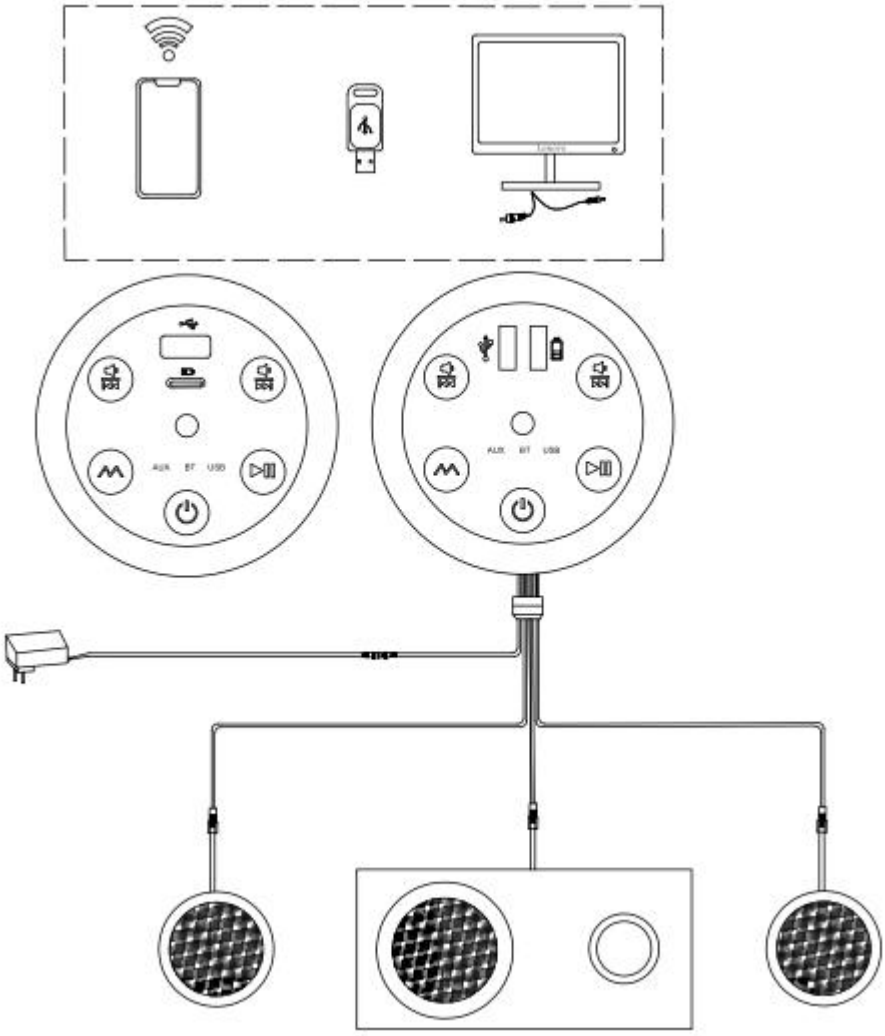

HOW TO USE

Bluetooth mode:

Bluetooth mode is set as default mode for playing music wher the sofa music system is turned on (touch the "Power" button till the indicator light turns from red to blue) and Bluetooth indicator light "BT is shining. First search the Bluetooth device list in mobile phone, and click to

connect"**GFUSA**".the name of the sofa music system, and the indictor light"BT",Then it is ready to play music from the mobile phone.

USB mode:

When insert a USB device Flash disk,"USB" indicator light is on,and the play mode will automatically switch to USB mode,scanning USB devices and automatically play music files.

AUX mode:

When insert the 3.5mm audio cable to the AUX connector, it will automatically switch to the AUX mode, and "AUX" indicator light is on. And it's ready to play music from phone, TV, and computer. in this mode, only the Volume+ and Volume-and Play/Pause buttons could be operated from the control panel of the device.

Specifications

Power input: DC12V / 2A Frequency response: 50HZ-20KHZ SNR: ≥ 60db
Maximum output power for 2+1 speakers: 15W* 2 + 30W Speaker
Impedance: 4 ohms
Adjustment forms: Touch button for Power switch / automatic mode switch / Volume adjustment / Previous and Next song switch Bluetooth Distance: > 10 m in open areas
Bluetooth transmitting frequency: 2.4G

USB function: Support playing music on Flash disk and charging mobile phone via USB cable.

Maintenance and Troubleshooting Guides

Before you think to repair the sofa music system for problems, please check first the following FAQ and troubleshooting guides to find the possible causes of the problem you are experiencing.Some simple checks or minimum adjustment you make is likely to solve the problem and restore normal operation of the device. If you have some points in doubt, or, can not resolve the problem pls turn to professional maintenance personnel for solution.

FAQ	Troubleshooting Guides
In the mode of USB,not able to play music on Iphone/Ipod	The version of Iphone/Ipod is old, not the lastest thus can not play music automatically for the first time connection. You could try to play music manually, and from the second time, it could play music automatillcally once connected via USB cable.
In the mode of USB,not able to play music on Android system mobilephone	Please make sure your Anroid phone supports OTG function, or it could be the Android version being old not the latest. Pls confirm it's Android 4.3 or above.
No sound	Please check whether it's the speakers volume being too low or they are not correctly connected,If the problem still exist after checking the music system is all connected in correct form, the speakers need to be replaced.
Not able to turn on the device	The power supply is not plugged in correctly. If confirm there is something wrong with the power supply, it needs to be replaced. Or if the power supply is in good condition, then it's likely that there is a problem with the device, it would have to be replaced.
No response the device	Please unplug and plug the power supply and try again. iphone/ipod/Android phone/USB/AUX is not plugged in correctly.
Touch button does not work	Please do not press too hard on the touch button and check whether if there is any obstacle or water on top of the button, and try to unplug and plug the power supply and try again.
In mode of Bluetooth not able to connect the device to the music system	Please turn off the bluetooth connection of the device like Iphone/ Ipad/Android phone etc (within the connecting distance) that has been already connected to the music system, and then turn on the bluetooth of the other device that you want to connect to the music system, and search "MS003", the name of the music system and click to connect it. Please make sure the connecting distance is whithin 10 meters, and avoid the wall and the corner.

ITEM :600152
ASSEMBLY INSTRUCTIONS

STEP 1

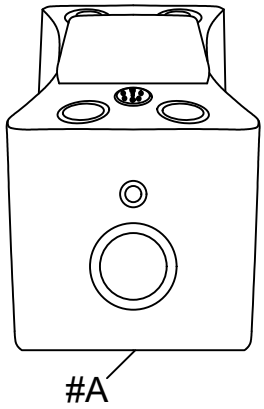

STEP 2

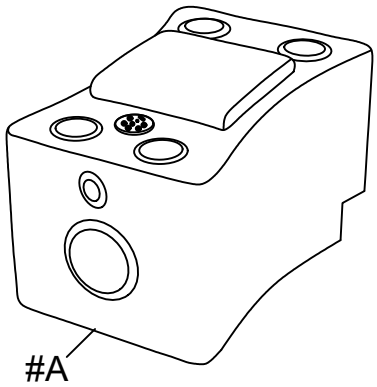

STEP 3

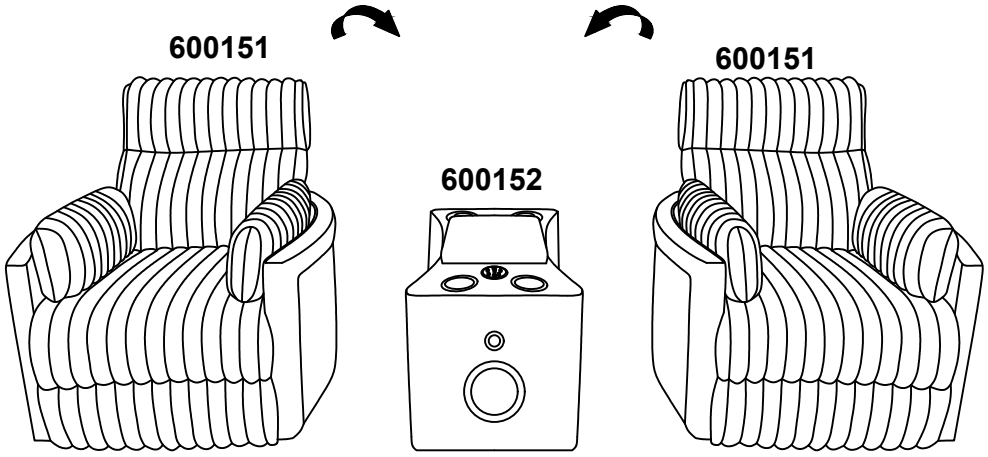

STEP 4

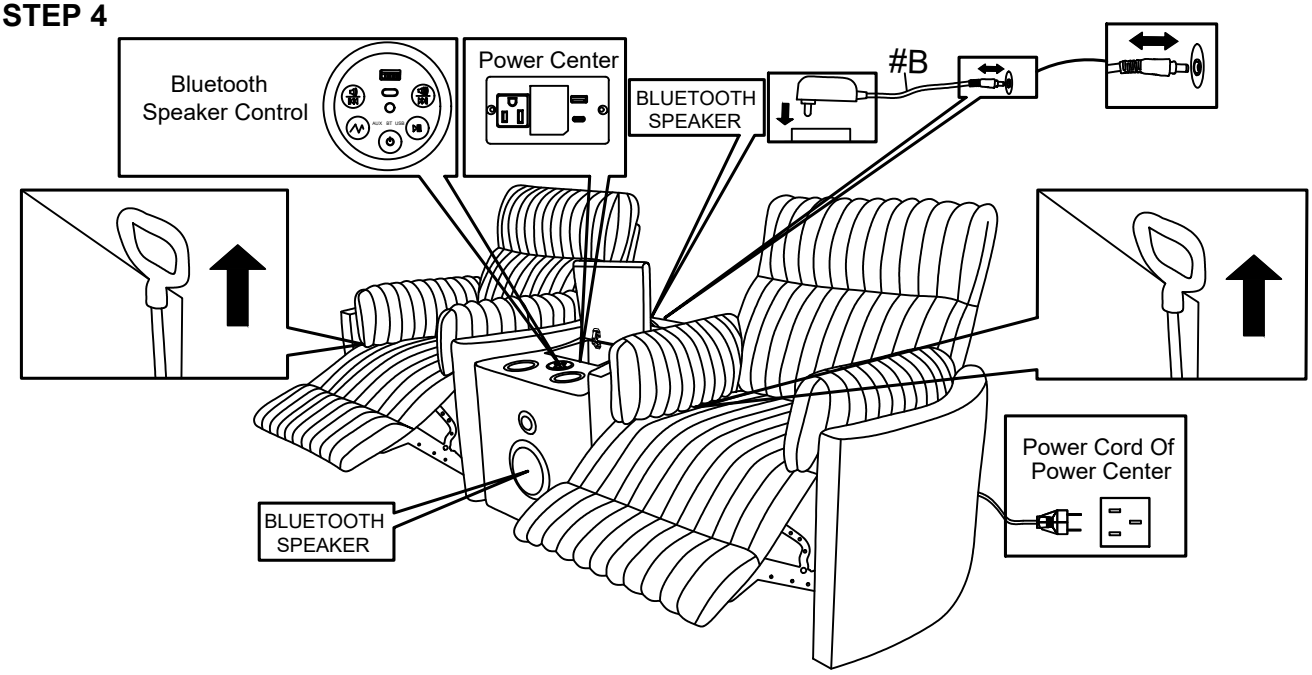

600152

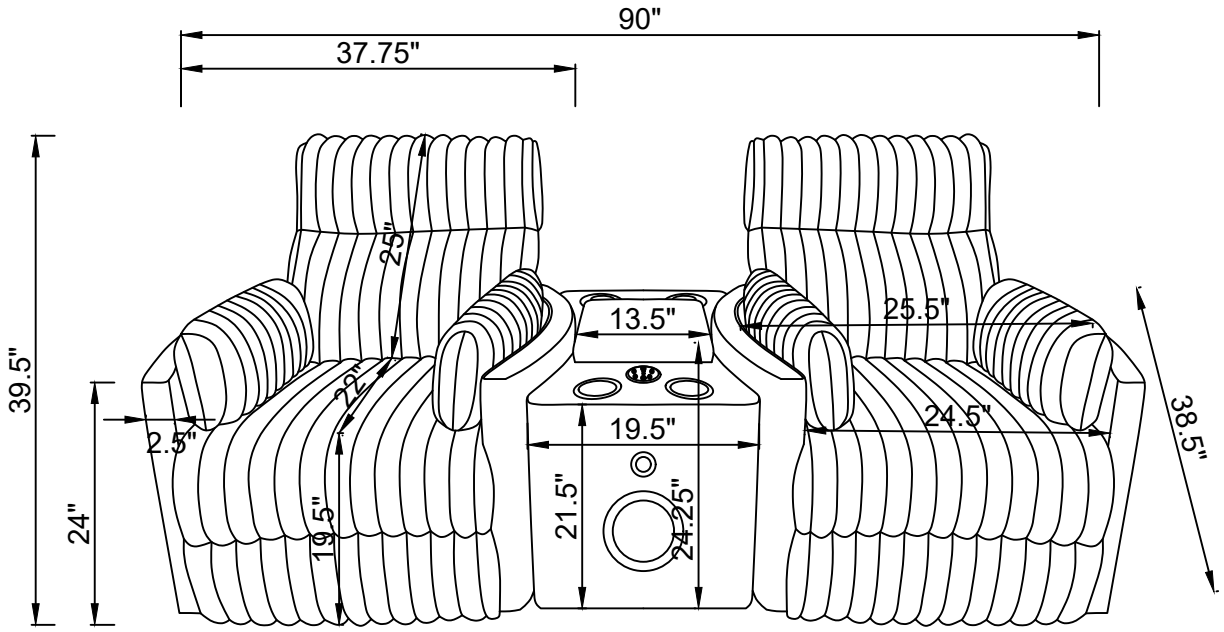

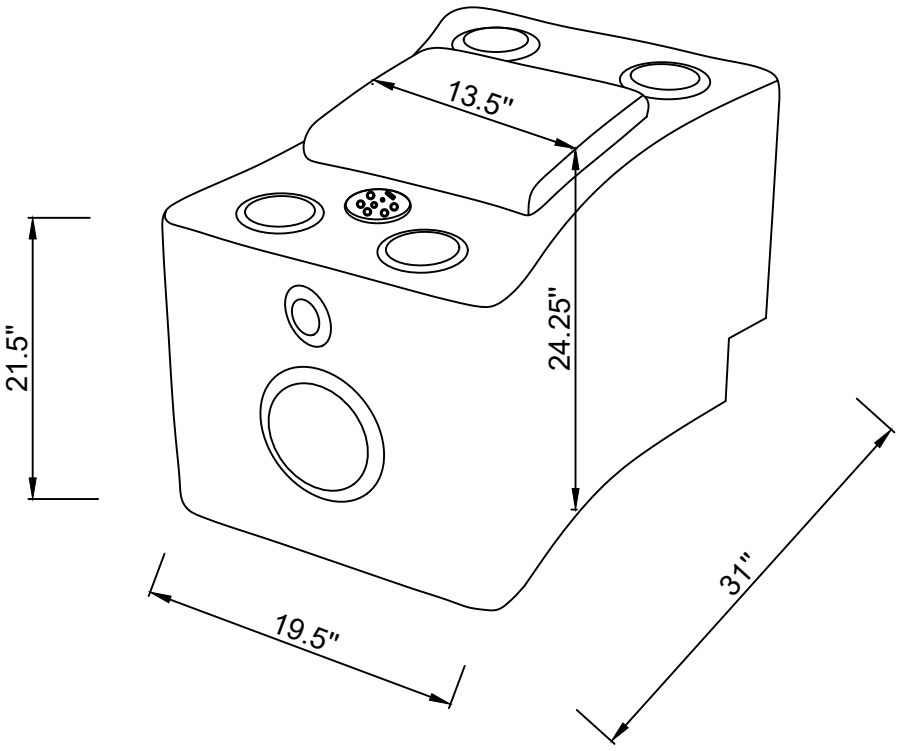

Note: Dimension tolerance ±5%

COASTERFURNITURE.COM