# Side Catch
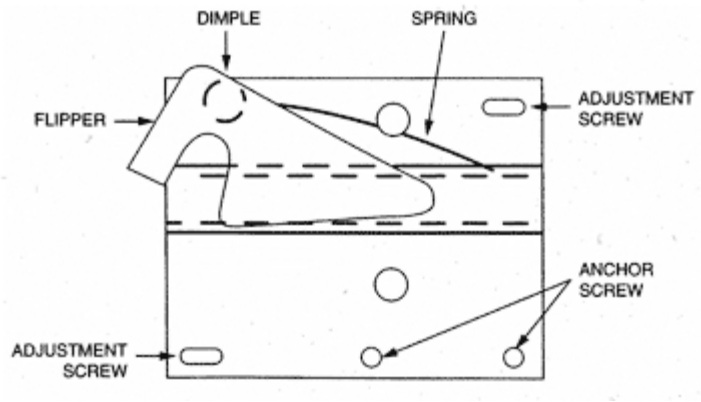
**When To Adjust**
Due to the settling of the drawers, it may be necessary to make adjustments to the side catch. If adjustment is necessary the first step should be to determine which direction the side catch should be moved. If the side catch "bumps" on the lock pin when the drawer is opened, the side catch should be moved upward. When locked the drawers should have approximately 1/8 inch of play. If the lock up is too tight the side catch should be moved toward the back of the file.
**How To Adjust**
To adjust the side catch, remove the two anchor bolts located at the bottom of the side catch. Loosen the two adjustable bolts and move the side catch as needed, then re-tighten bolts. It will be necessary to drill new holes through the drawer body using a #20 drill bit to re-install the anchor bolts.