Product Instruction

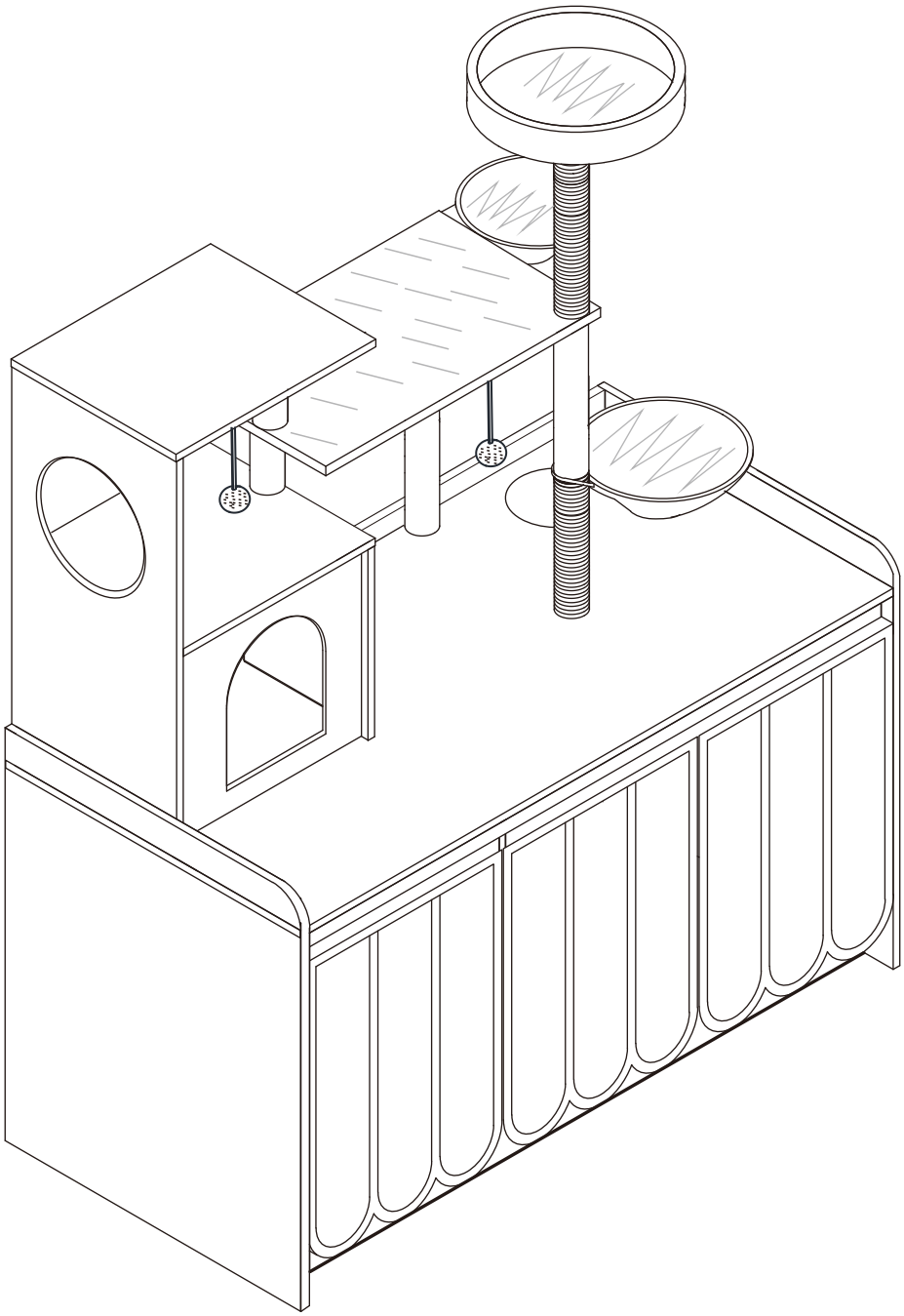

IMPORTANT INFORMATION!

please read the entire manual before starting to assemble and/or using this product.follow the manual thoroughly and keep it for further reference.

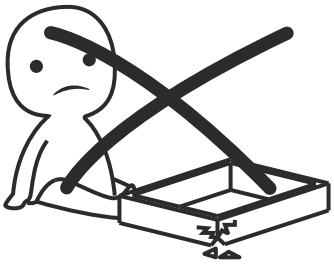

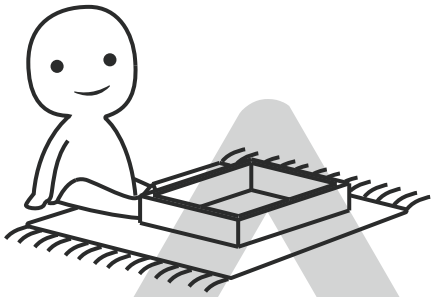

AVOID SCRATCHES!

In order to avoid scratching this furnuture should be assembled on a soft layer–could be a rug.

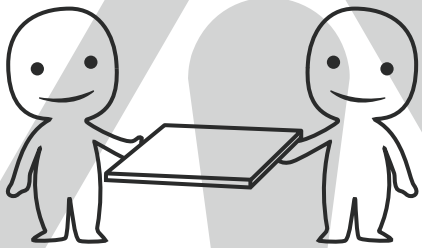

IMPROVE EFFICIENCY !

Try to find a partner to install with you, which can speed up the installation efficiency and shorten the time.

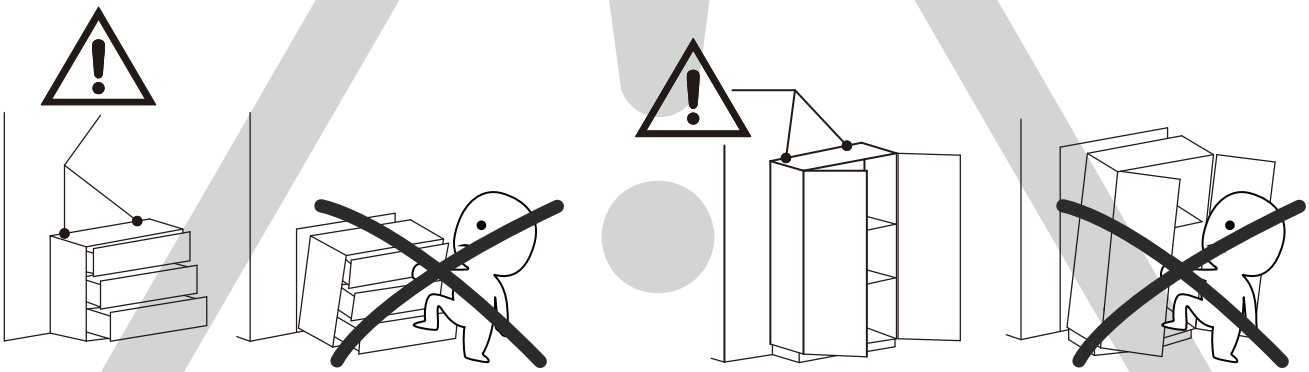

ANTI-TOPPLE WARNING !

Overturned furniture can cause serious or fatal crush injuries. To prevent tipping over, be sure to use the wall attachment, if not included with this product. Please purchase the wall attachment that fit your wall. If unsure, seek professional advice. Please read and follow each step of the instructions carefully.

IMPORTANT !

It is important that any product which is assembled using any kind of screw is re-tightened 2 weeks after assembly, and once every 3 months - in order to assure stability through-out the lifespan of the product.

For regular maintenance and cleaning of the product, for the frame, please use a rag dipped in neutral detergent to fully wipe it, and then dry it with a clean rag.For glass materials, wipe with a rag dampened with water glass cleaner, and thendry with a dry rag.

Do not use an electric screwdriver, and do not use too much force when installing, because the board is easy to break.

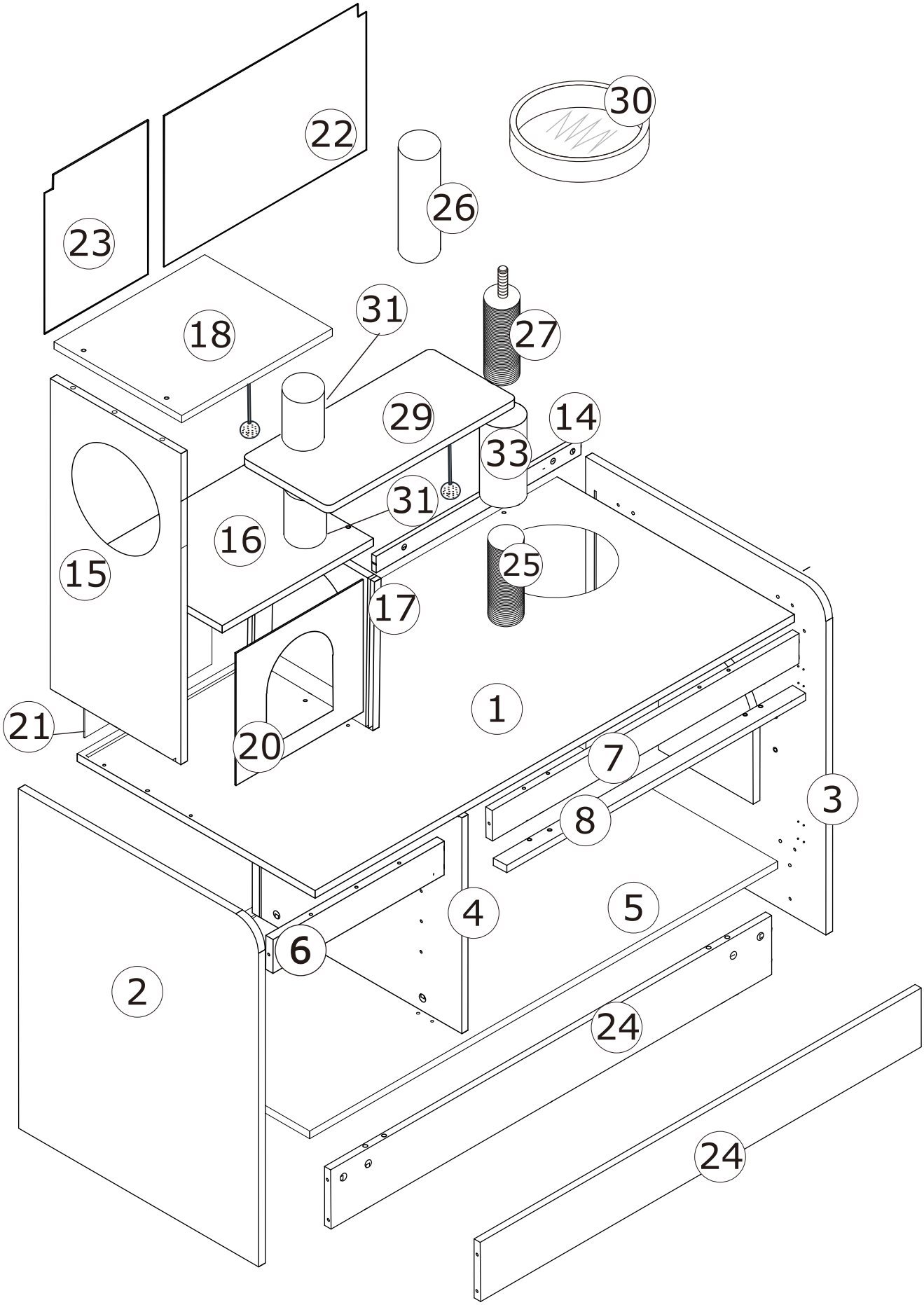
30
22
26
23
31
27
18
29
14
33
31
16
25
15
17
1
21
20
7
3
8
4
5
6
2
24
24

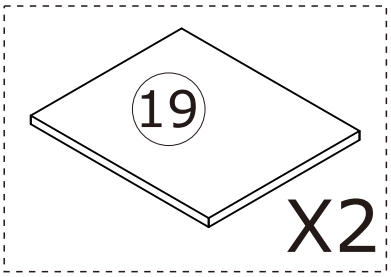

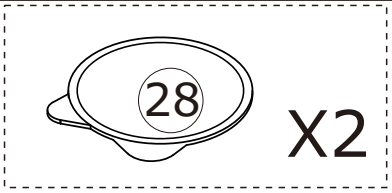

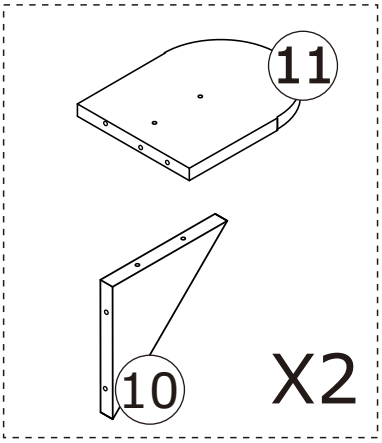

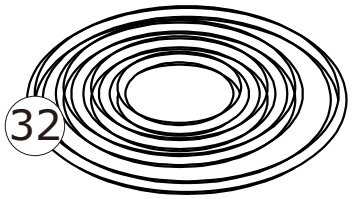

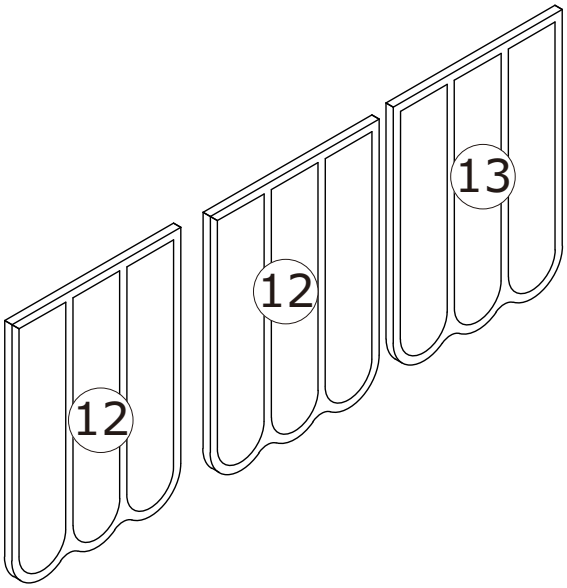

Note:
1. 50% Tighten before fixing all scews, Allen wrench is recommendedinstead of an electric drill.
2. Place the item on a flat ground to adjust and make sure it remains stable.
3. Tighten up all screw with tools gradually.
4. If screw are not aligned with holes furing assembly, please loosen all the other screws to 50% and continue the assembly process.
5. If the item is not stable, please loosen all screws, adjust it on a flat ground and tighten up all screws again.
6. Note: If one or some screws are fully tighten during assembly, chances are the others will not be aligned with holes. In addition, all the holes are designed to be relatively larger to provide more space for the adjustment of the screws.

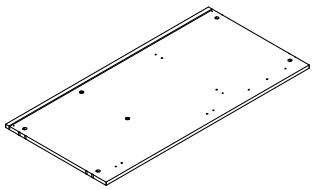	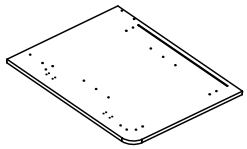	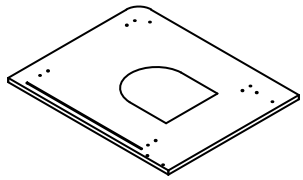
① x1	② x1	③ x1
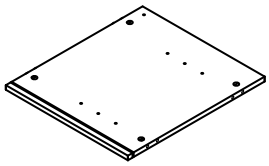	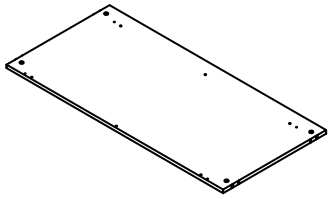	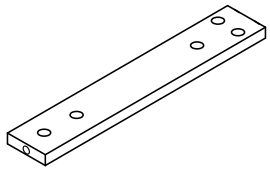
④ x1	⑤ x1	⑥ x1
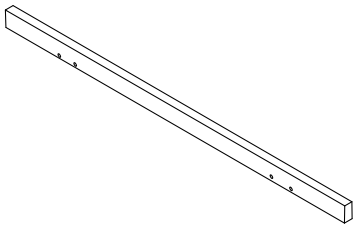	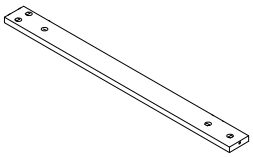	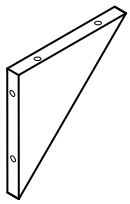
⑦ x1	⑧ x1	⑩ x2
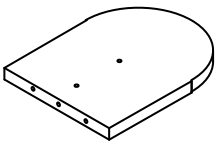	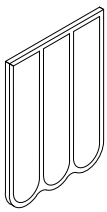	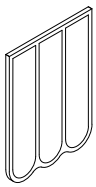
⑪ x2	⑫ x2	⑬ x1
	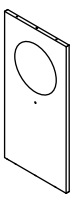	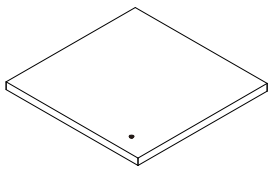
⑭ x**1**	⑮ x**1**	⑯ x**1**
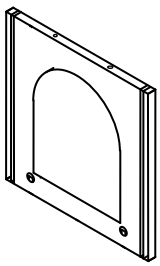	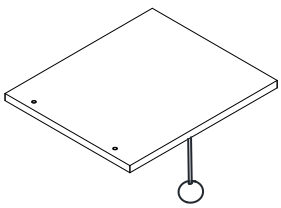	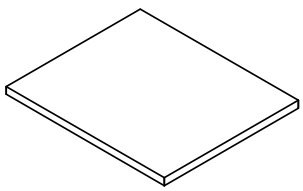
⑰ x**1**	⑱ x**1**	⑲ x**2**

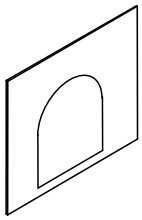	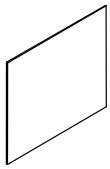	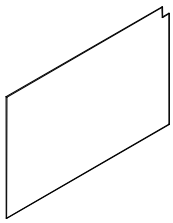
20 x1	21 x1	22 x1
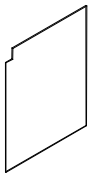	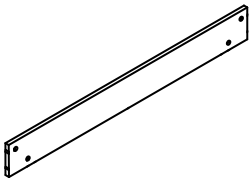	
23 x1	24 x2	25 x1
		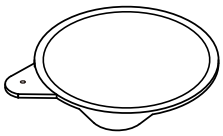
26 x1	27 x1	28 x2
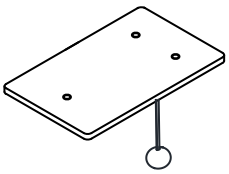	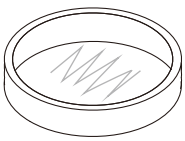	
29 x1	30 x1	31 x2
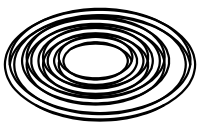	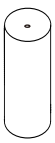	
32 x1	33 x1	

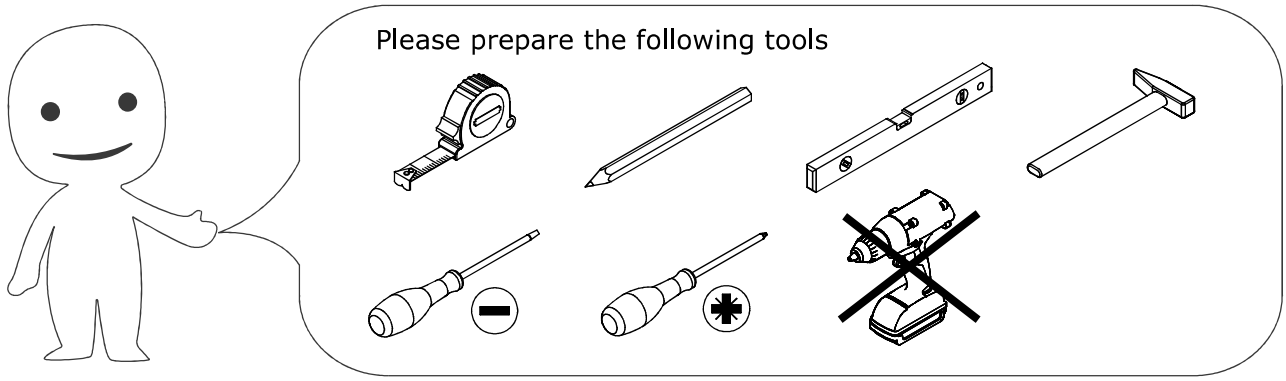

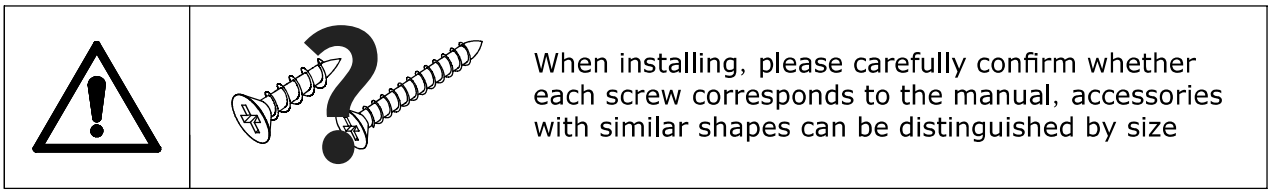

When installing, please carefully confirm whether each screw corresponds to the manual, accessories with similar shapes can be distinguished by size

A x 41

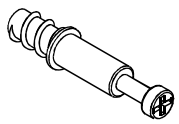

∅6 x 35 mm

B x 41

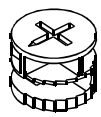

∅15 x 9.5mm

C x 36

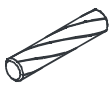

∅6X30 mm

D x 8

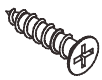

∅3 x 12 mm

E x 36

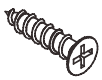

∅3.5 x 12 mm

F x 42

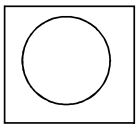

G x 17

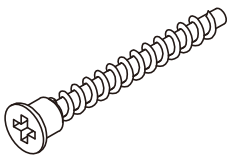

∅5 x 40 mm

H x 5

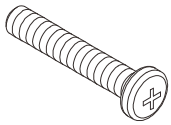

∅8 x 30 mm

J x 4

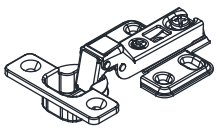

K x 2

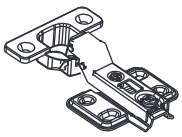

L x 8

M x 6

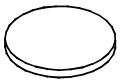

N x 2

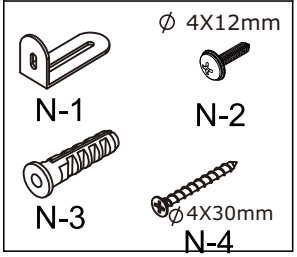

P x 8

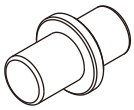

Q x 3

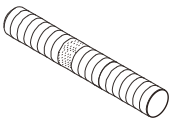

∅8 x 55 mm

1

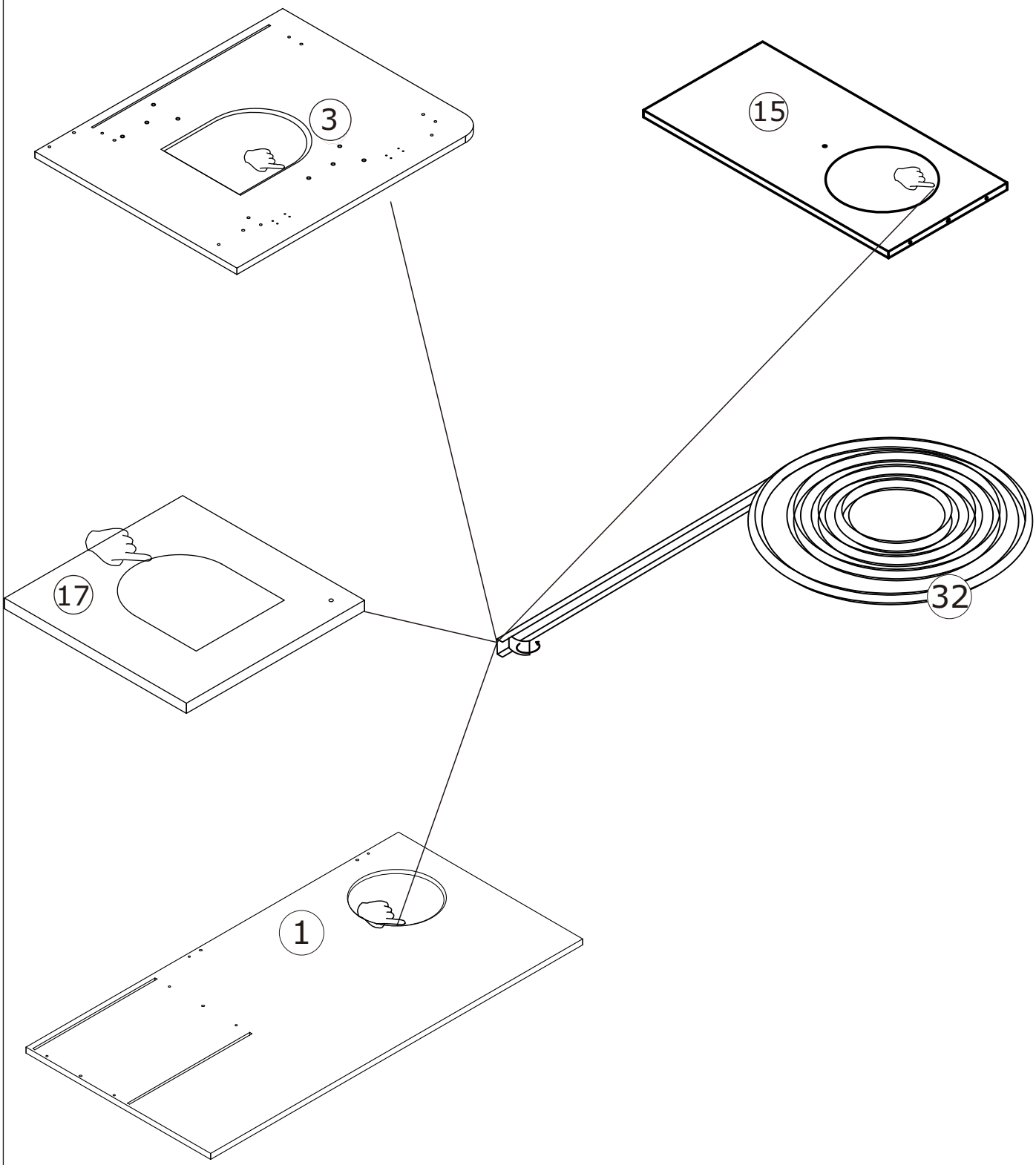

As shown in the figure, please tear one end of No. 32 with adhesive and place it in the molding place of No. 1 and No.3 No.17 No.15 plates.
From here on, stick it evenly in the molding place for a week, and remove the excess part.

2	G x 2	C x 2	
	∅5 x 40 mm	∅6 x 30 mm	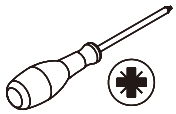

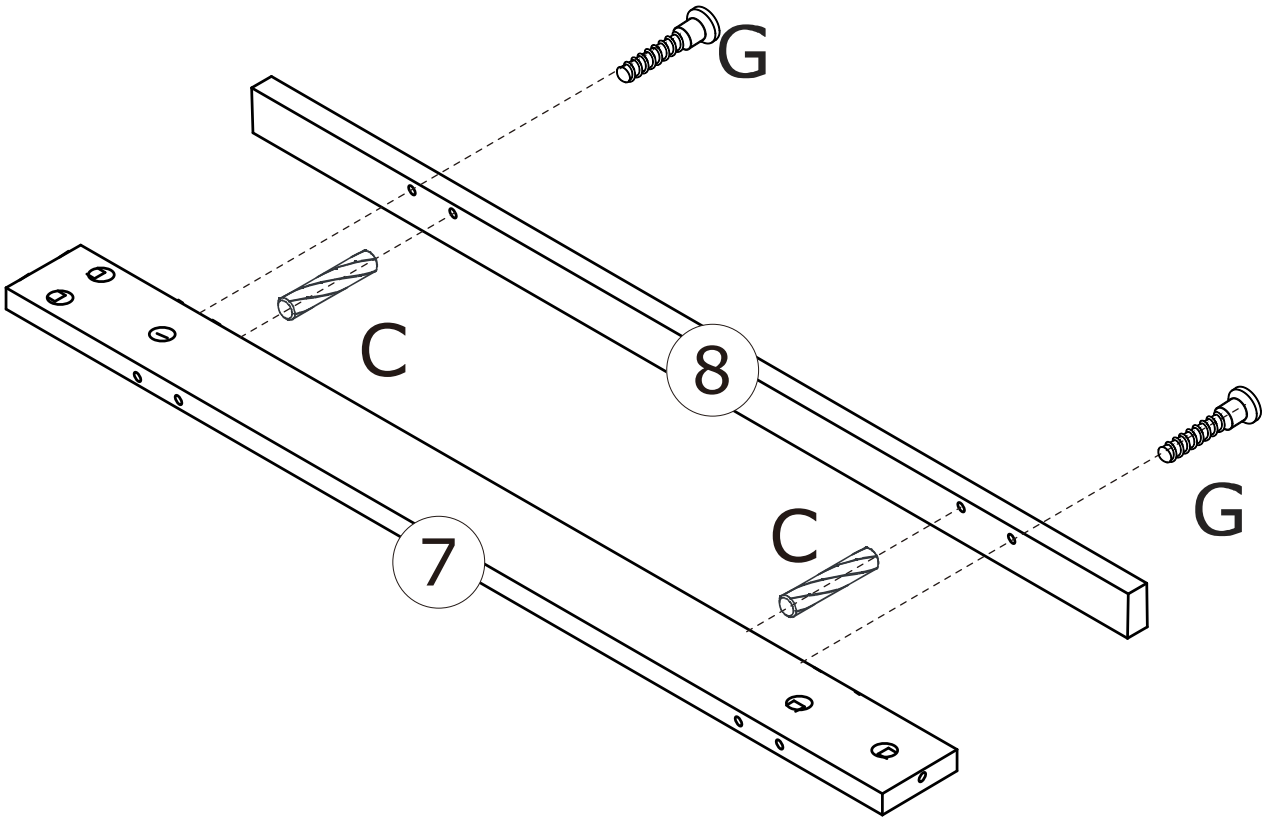

3

A x 3

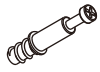

∅6 x 35 mm

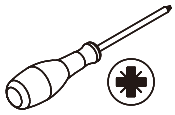

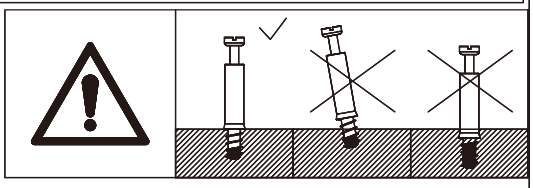

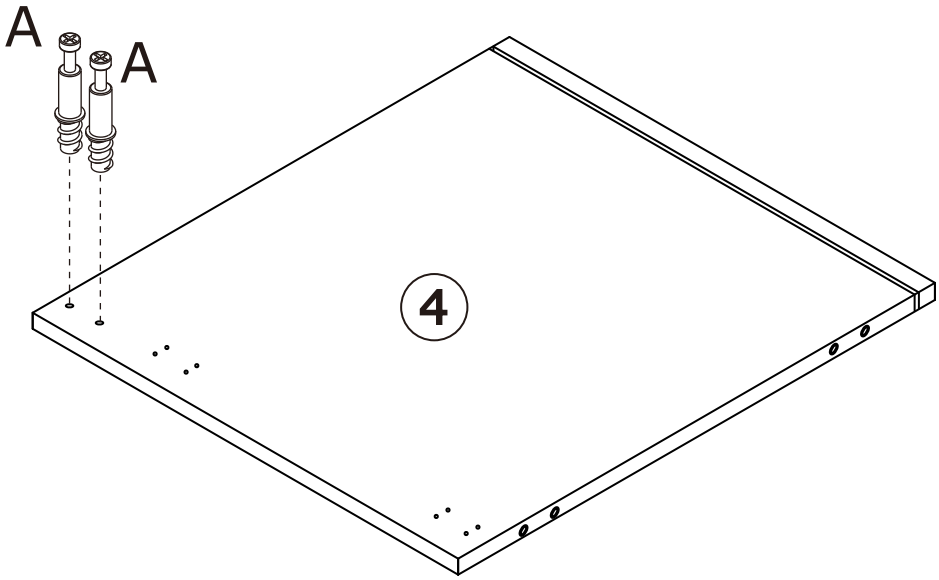

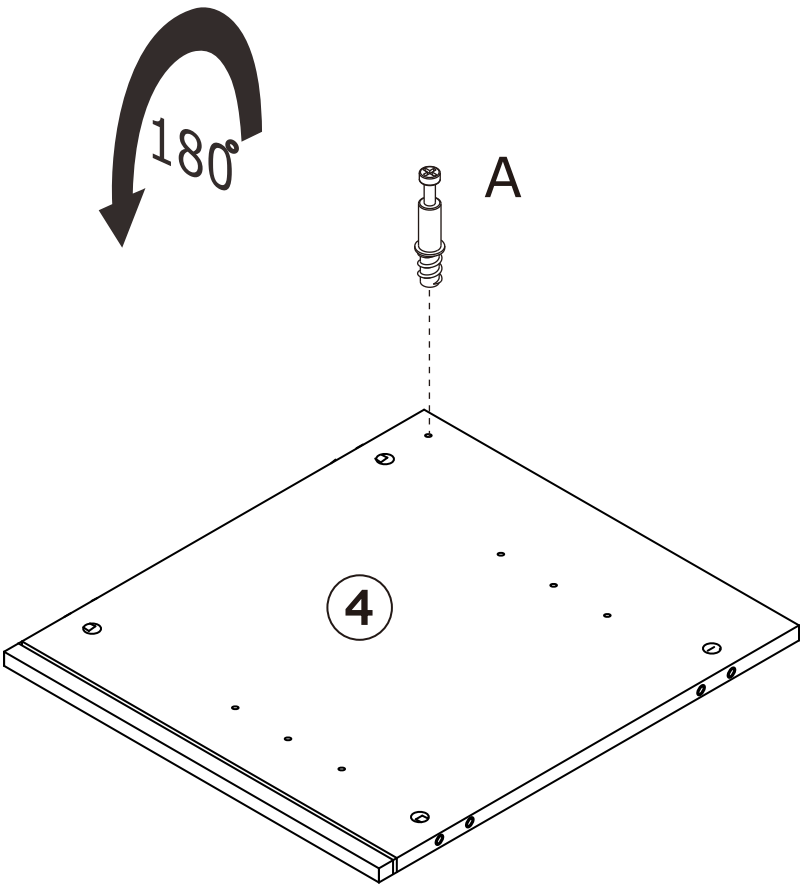

4

B x 3

∅15 x 9.5 mm

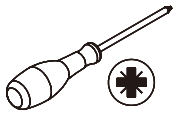

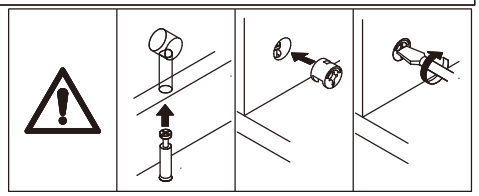

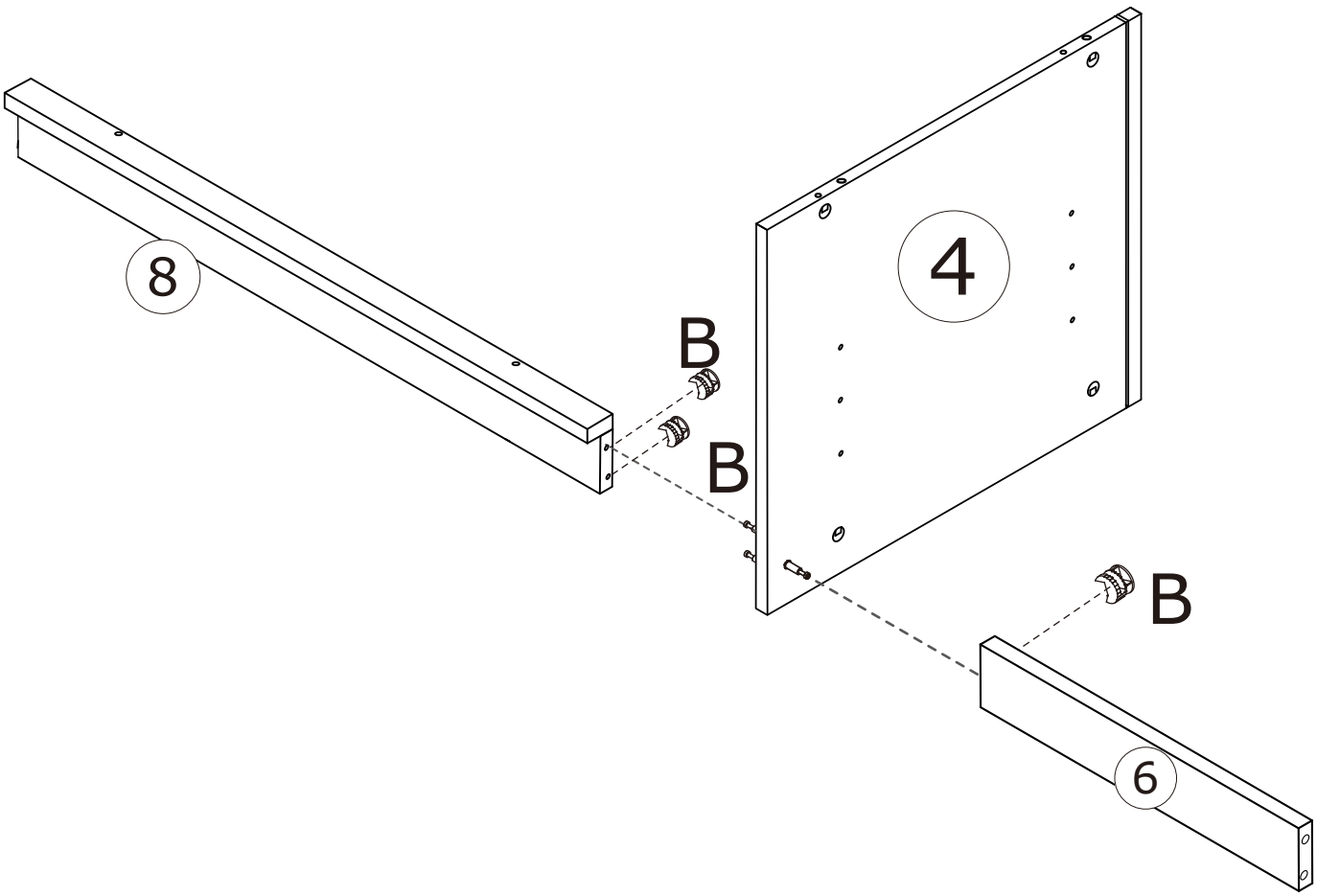

5

A x 6	C x 5	N x 2	
∅6 x 35 mm	∅6 x 30 mm	N-1 N-2 ∅4 x 12 mm	

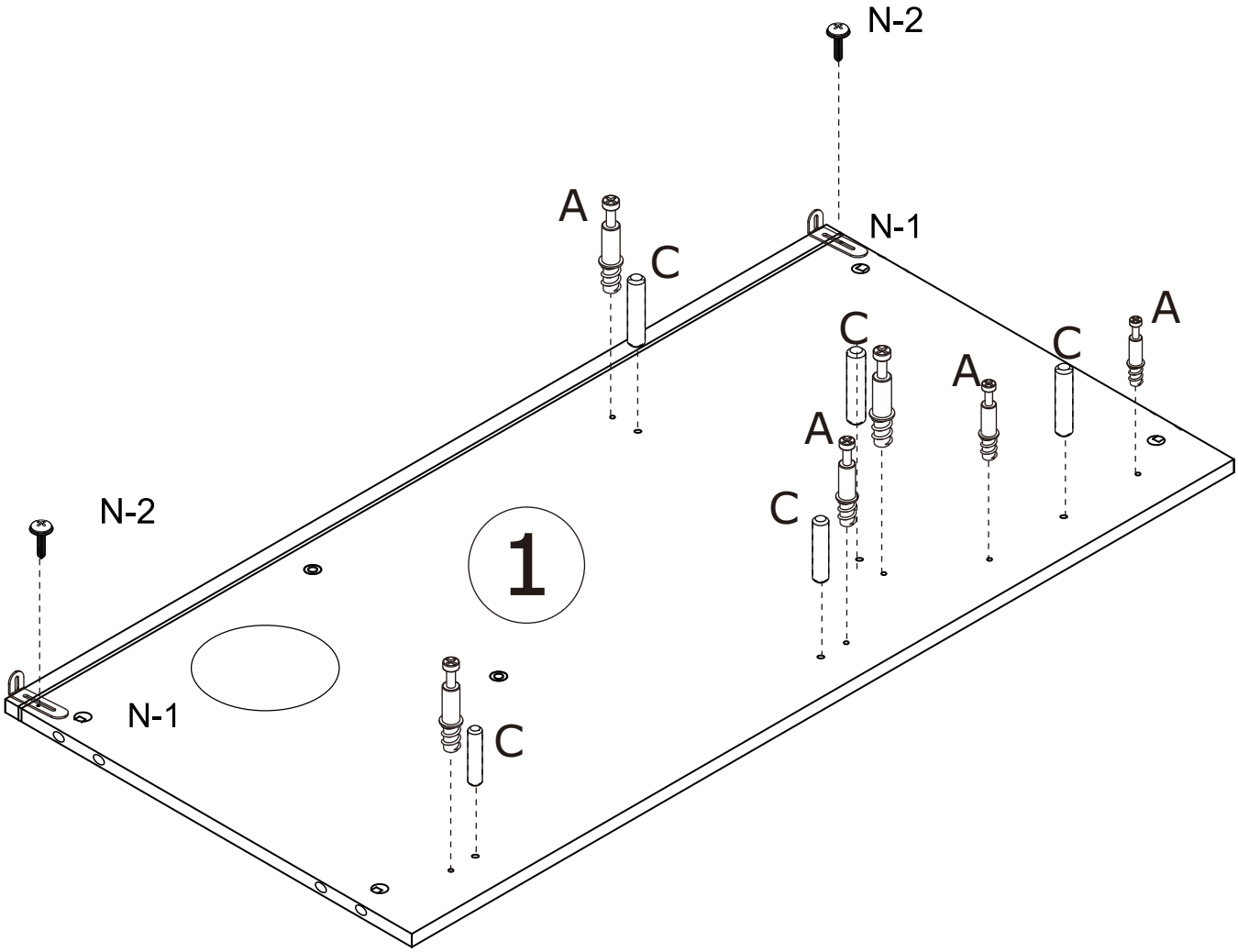

6

B x 6

∅15 x 9.5 mm

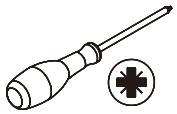

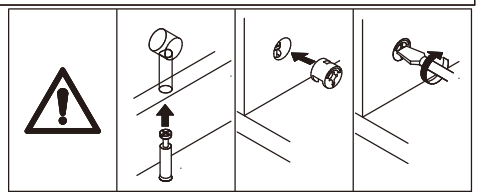

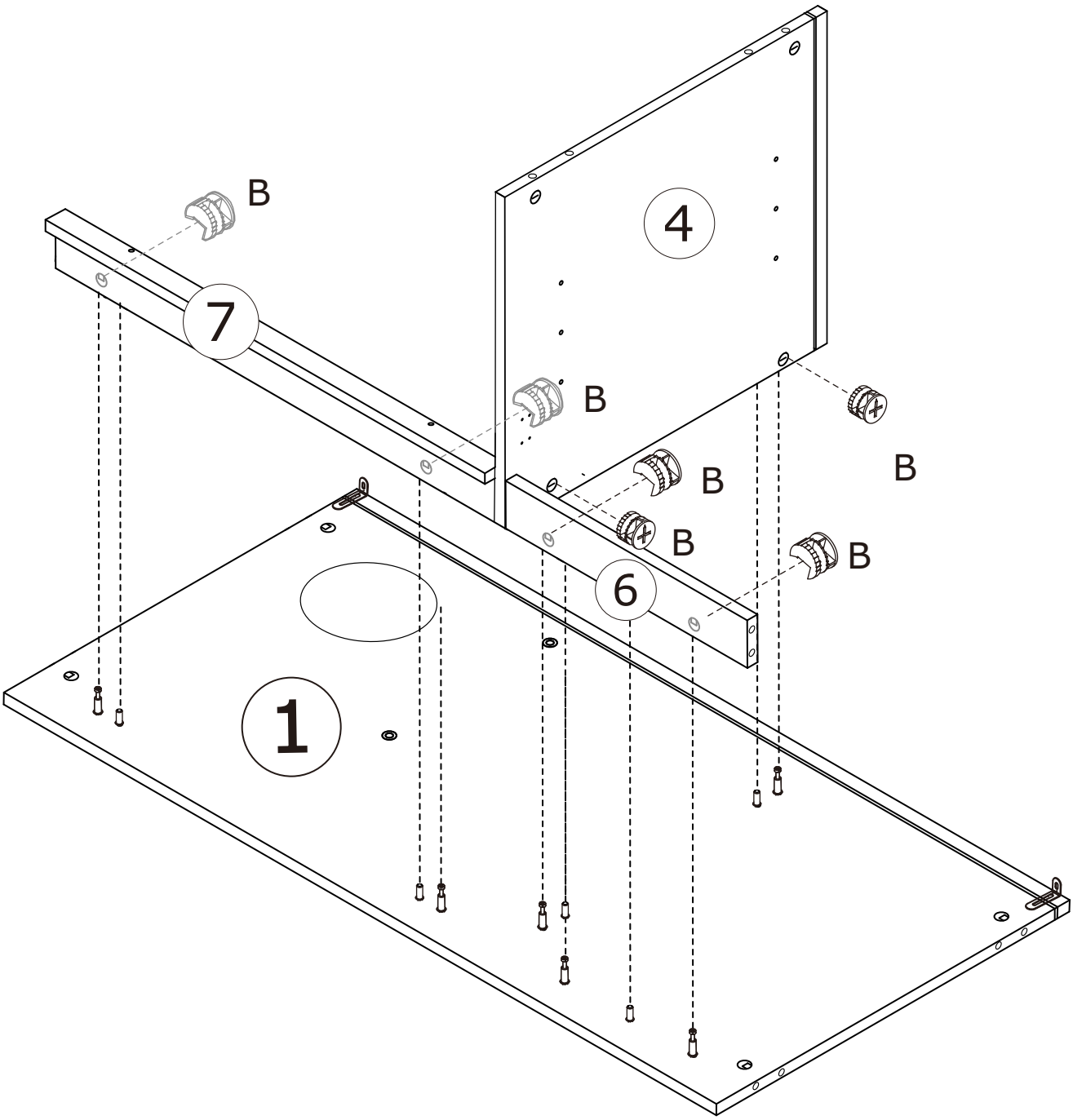

7

A x 4

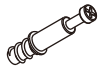

∅6 x 35 mm

C x 6

∅6 x 30 mm

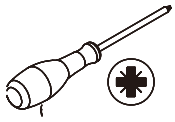

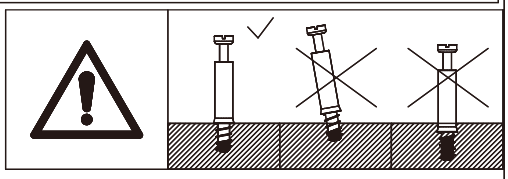

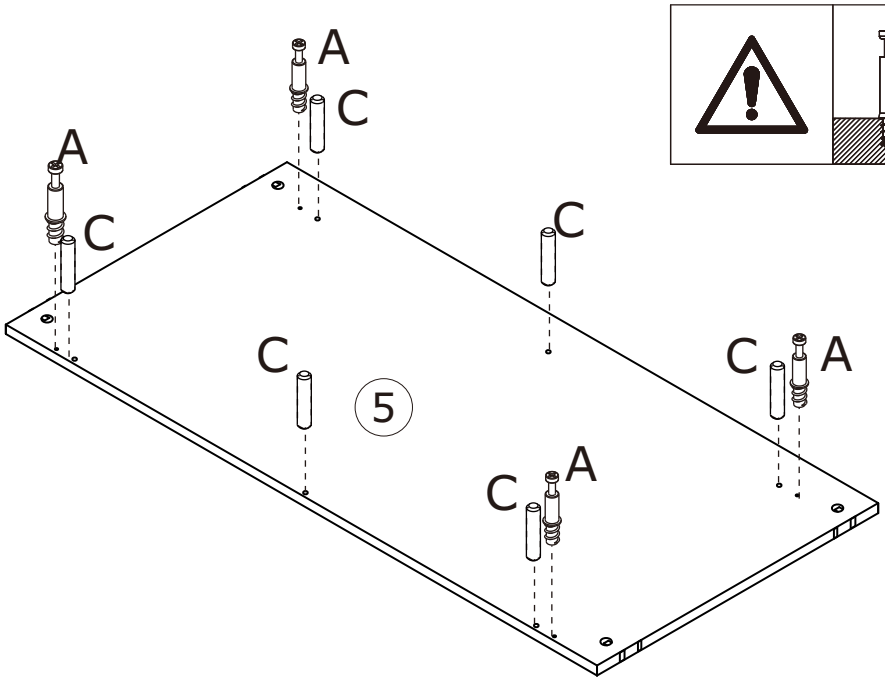

8

B x 4

∅15 x 9.5 mm

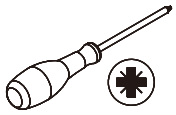

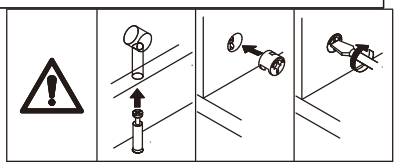

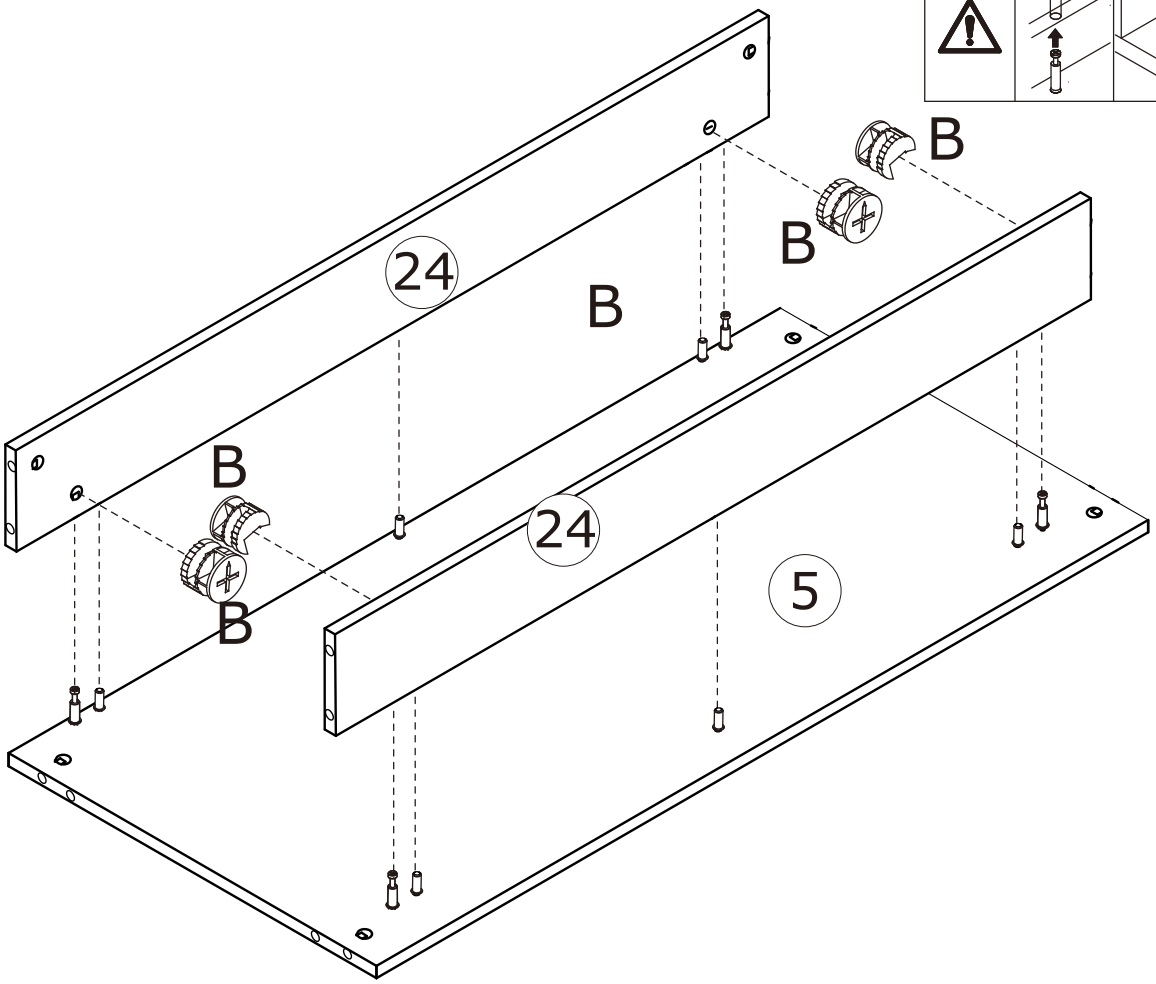

9

A x 2	C x 2	
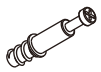 ∅6 x 35 mm	∅6 x 30 mm	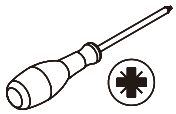

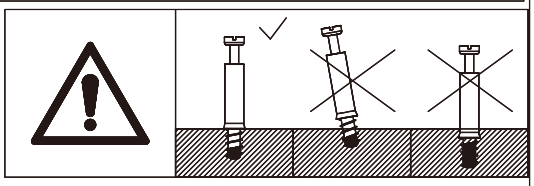

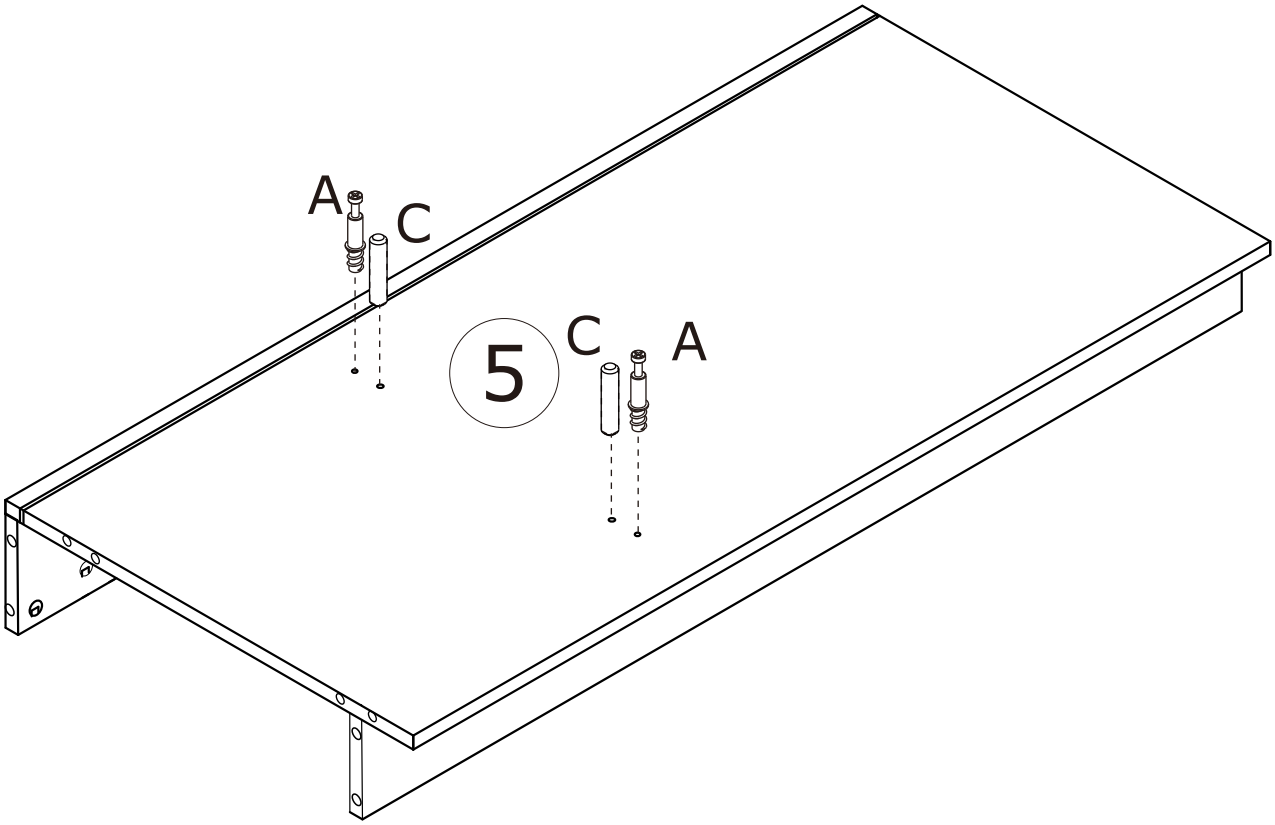

10

B x2

∅15 x 9.5 mm

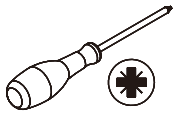

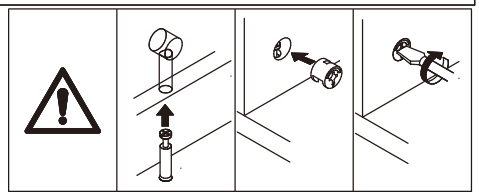

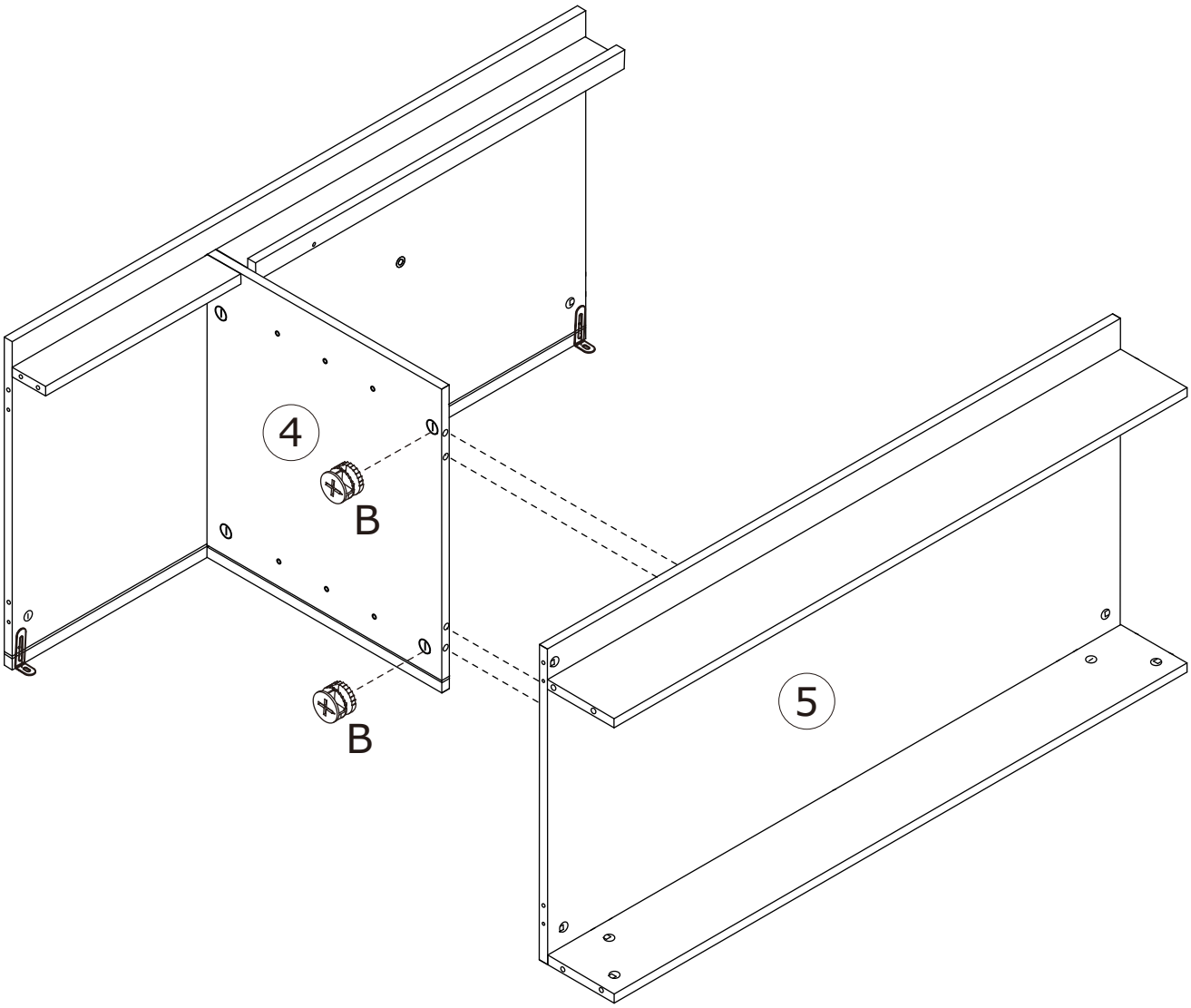

11

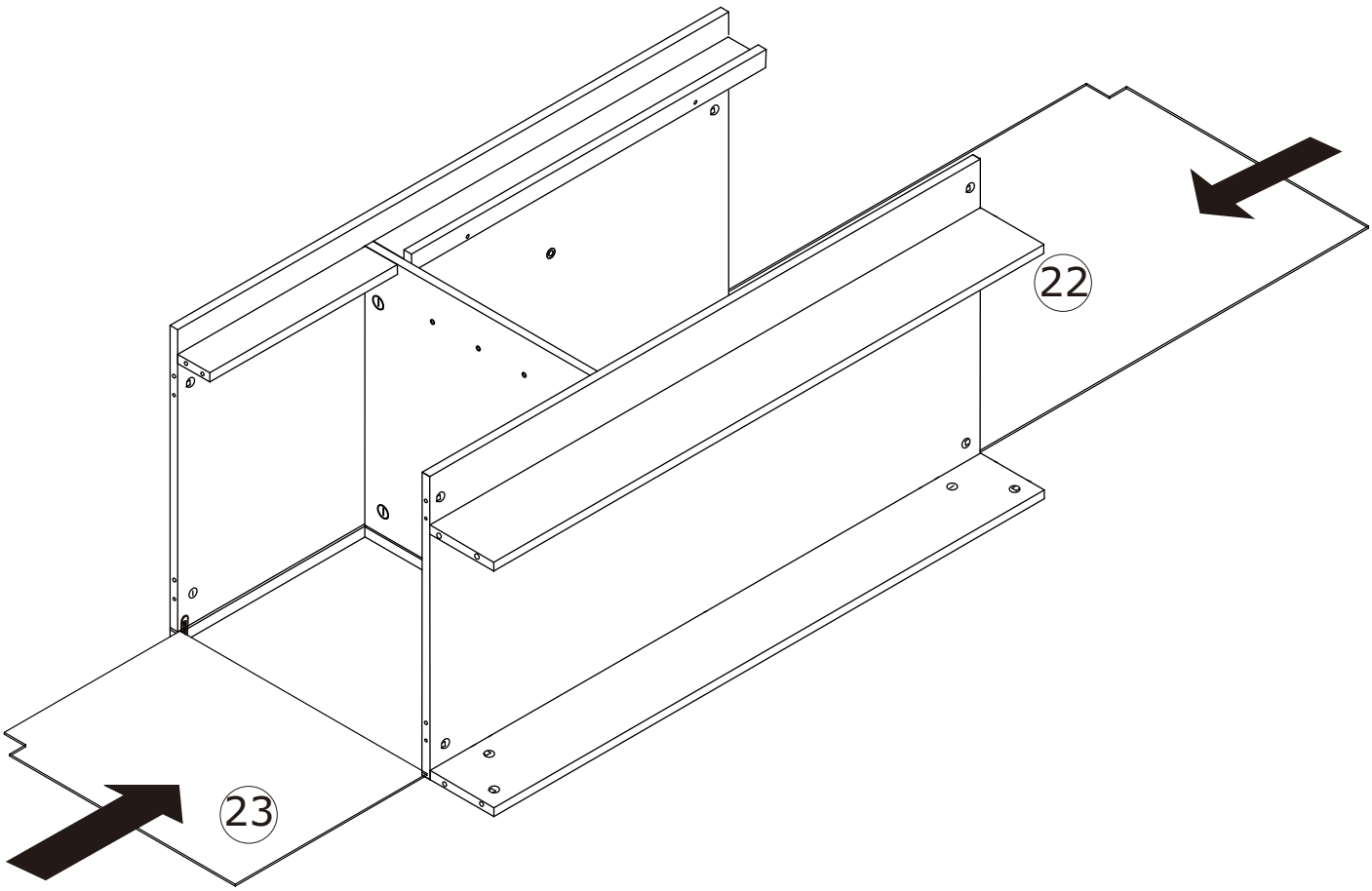

12

A x 15

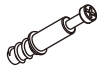

∅6 x 35 mm

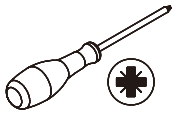

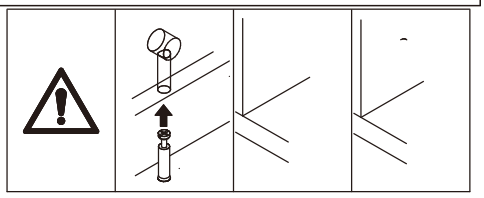

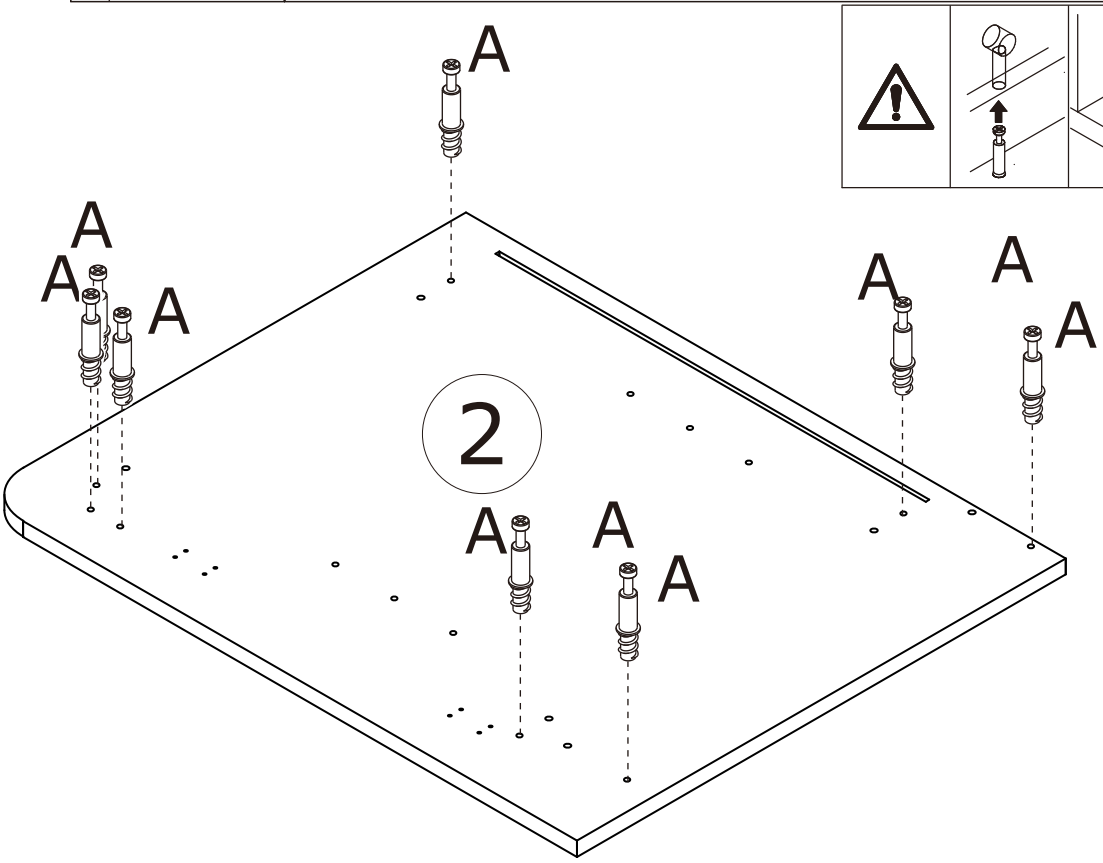

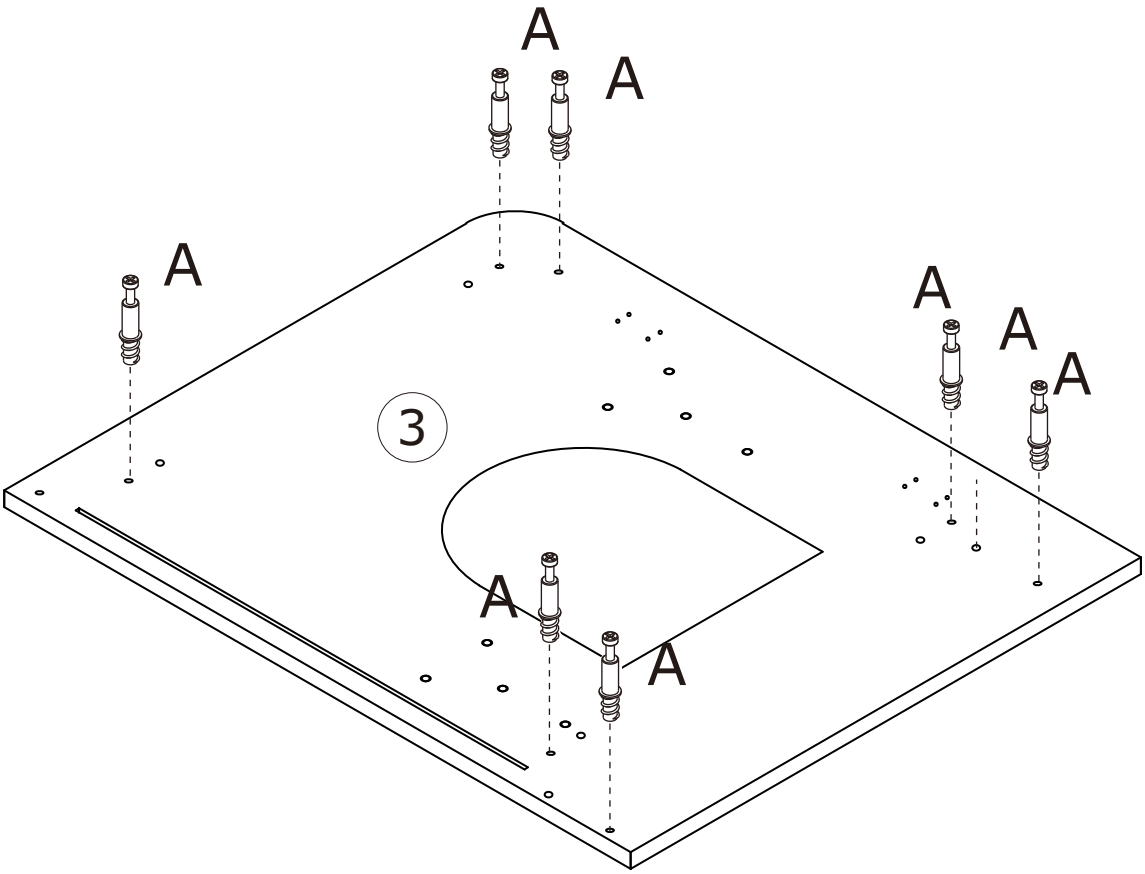

13

B x8	C x 6	
∅15 x 9.5 mm	∅6 x 30 mm	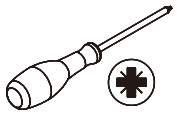

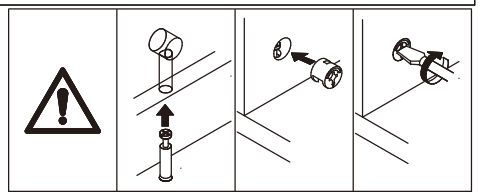

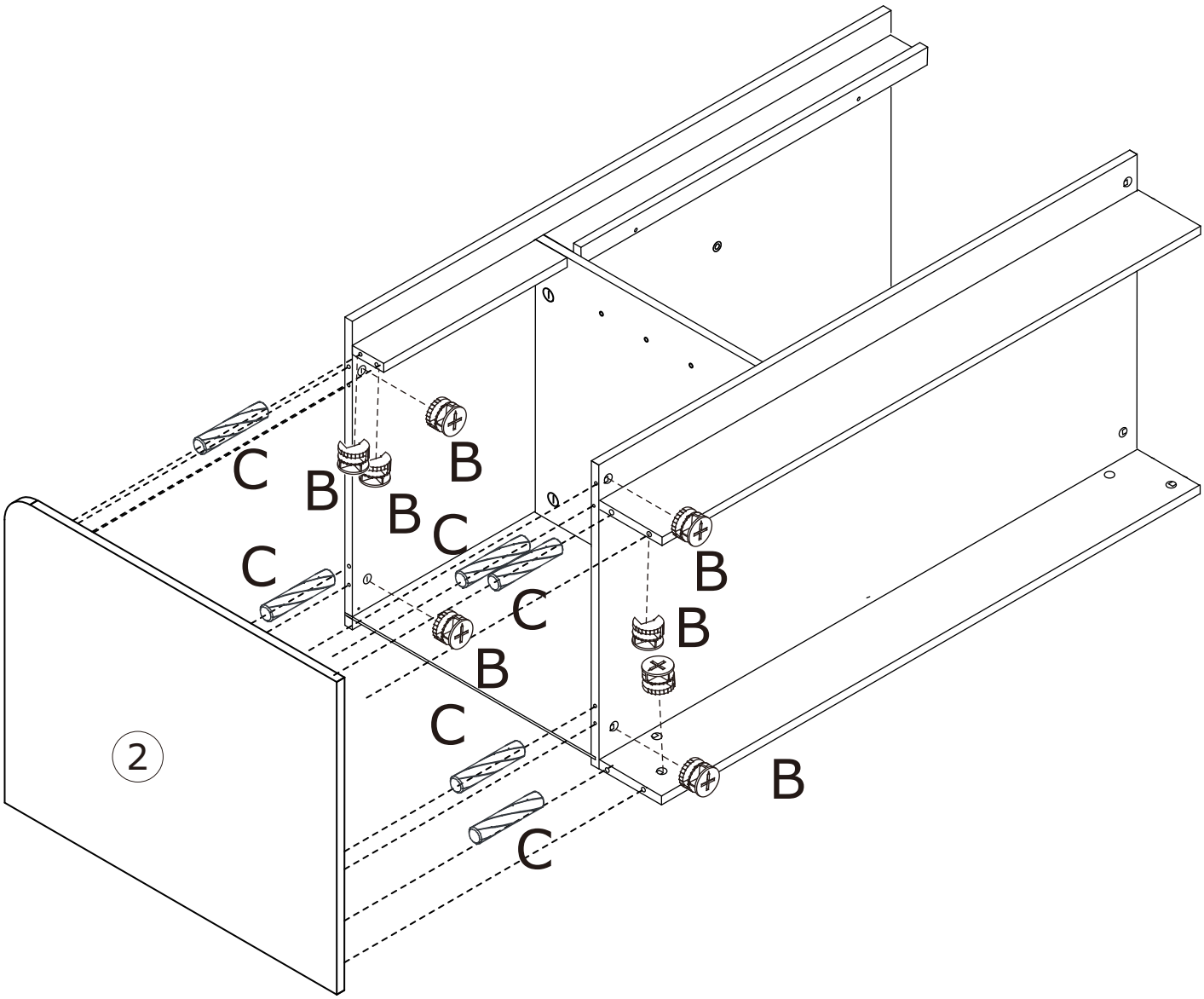

14

B x7	C x 6	
∅15 x 9.5 mm	∅6 x 30 mm	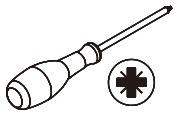

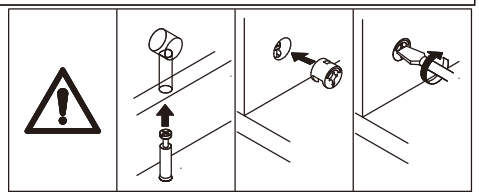

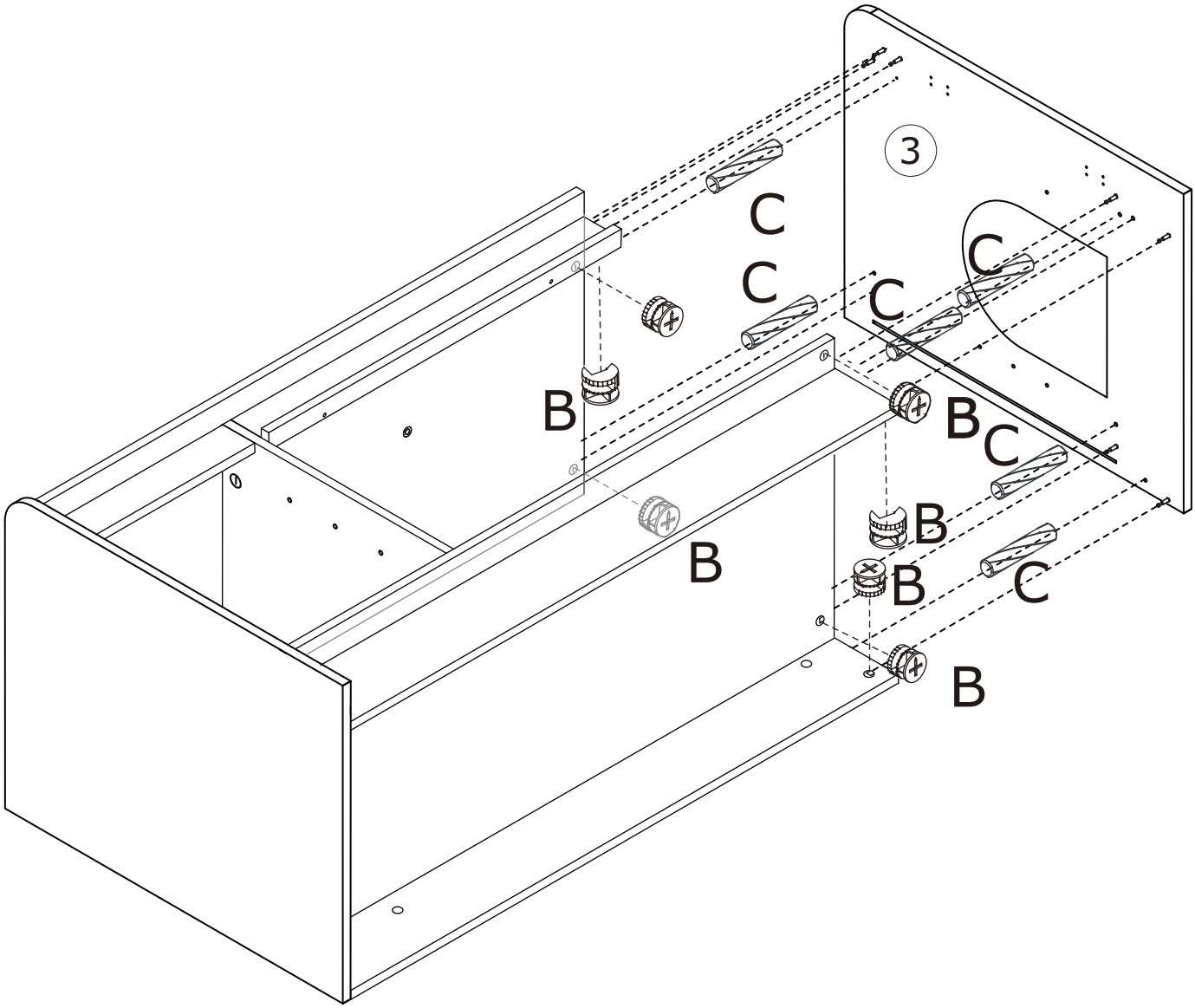

15

D x 8	L x 8	
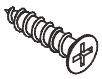 ∅3 x12 mm		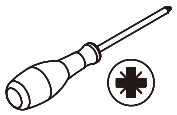

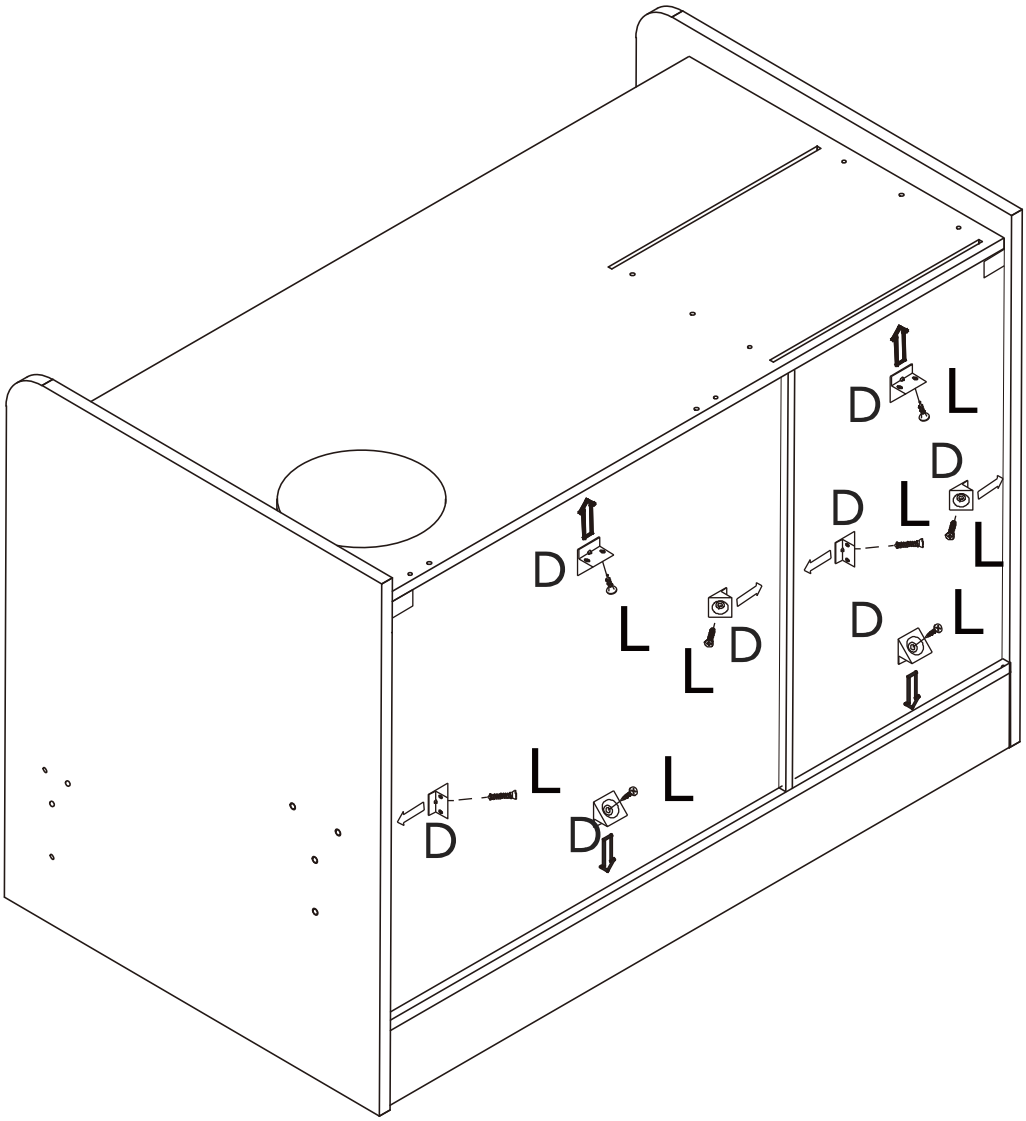

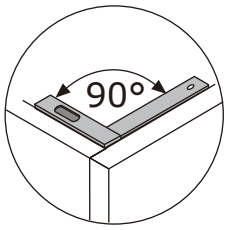

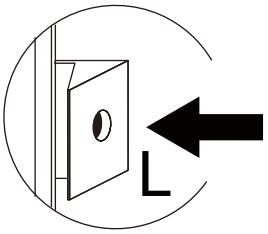

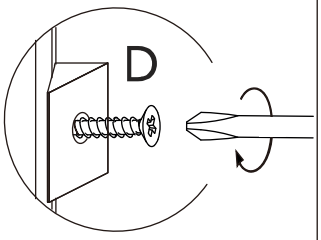

16

A x 6	C x 4	
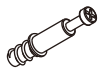 ∅6 x 35 mm	∅6 x 30 mm	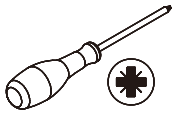

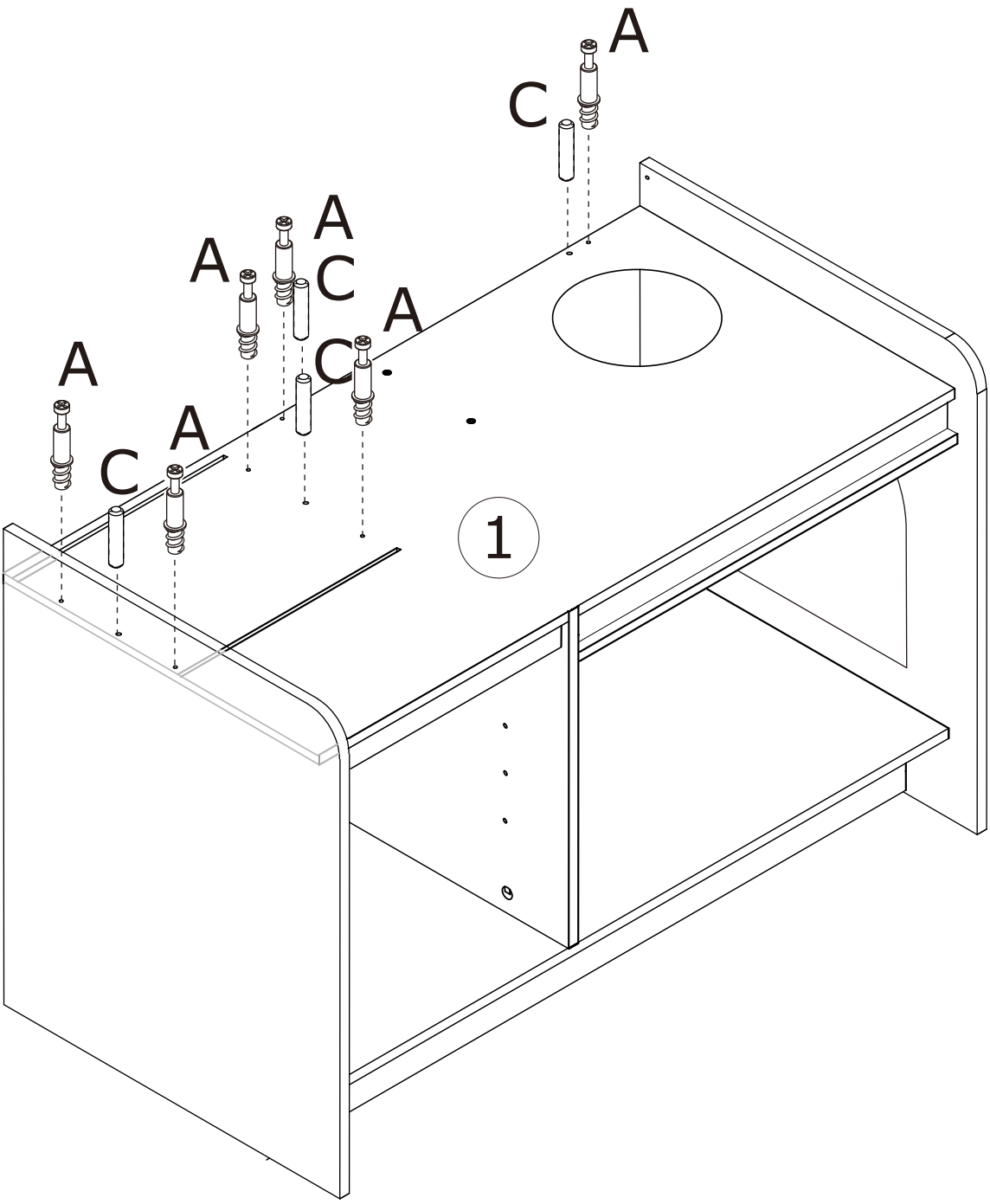

17

B x2

∅15 x 9.5 mm

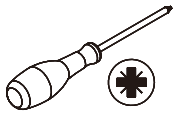

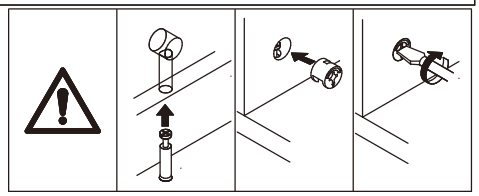

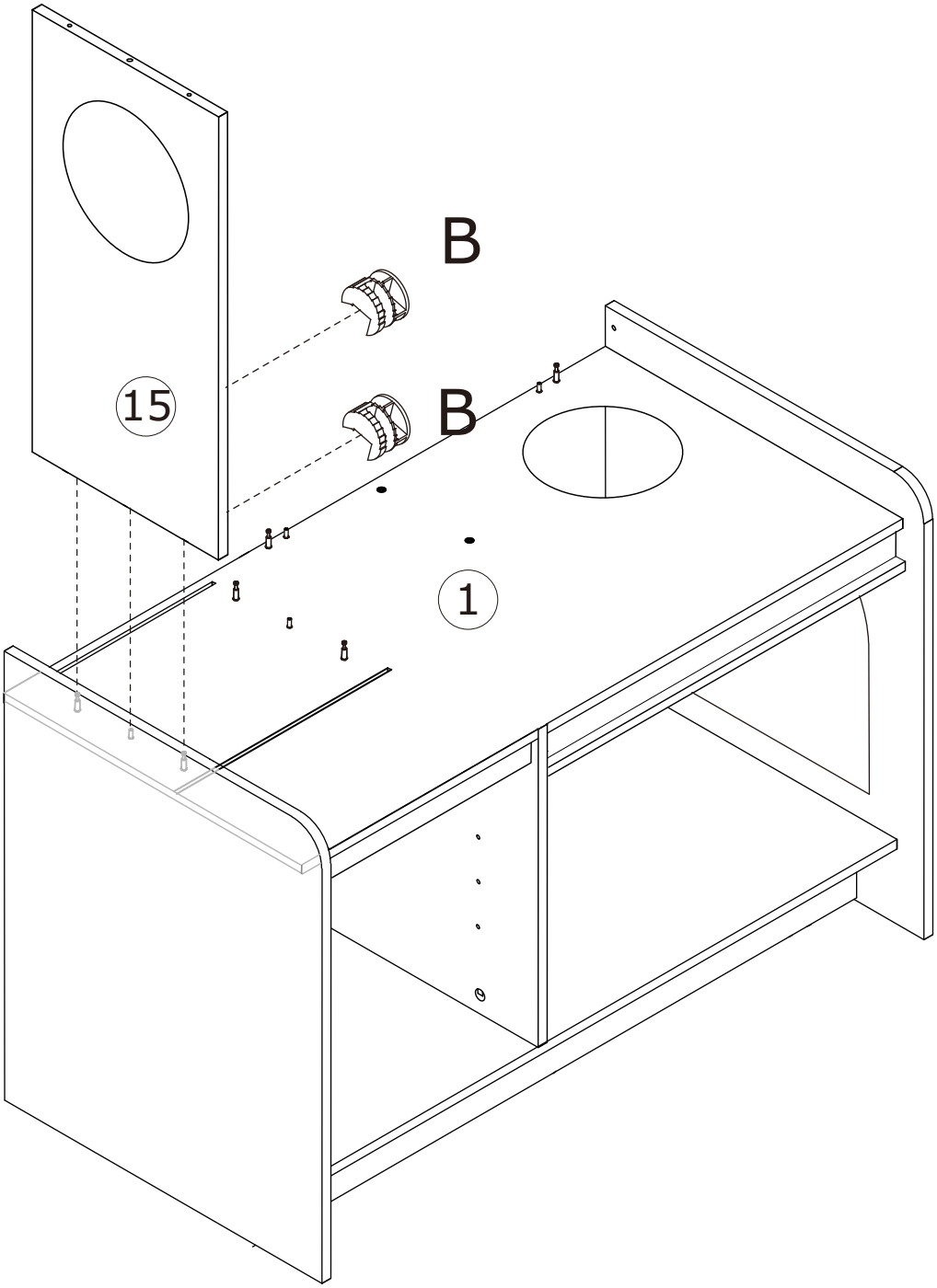

18

A x 1

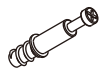

∅6 x 35 mm

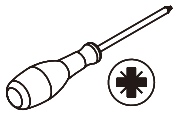

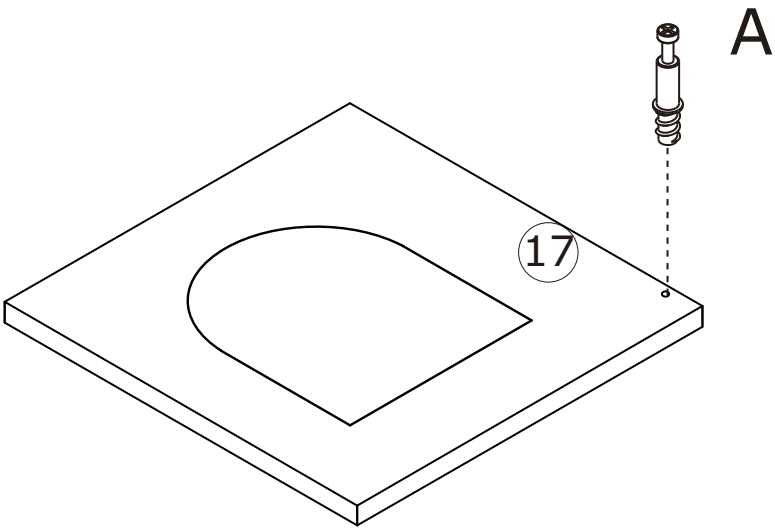

19

B x1

∅15 x 9.5 mm

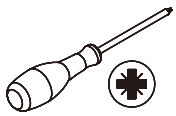

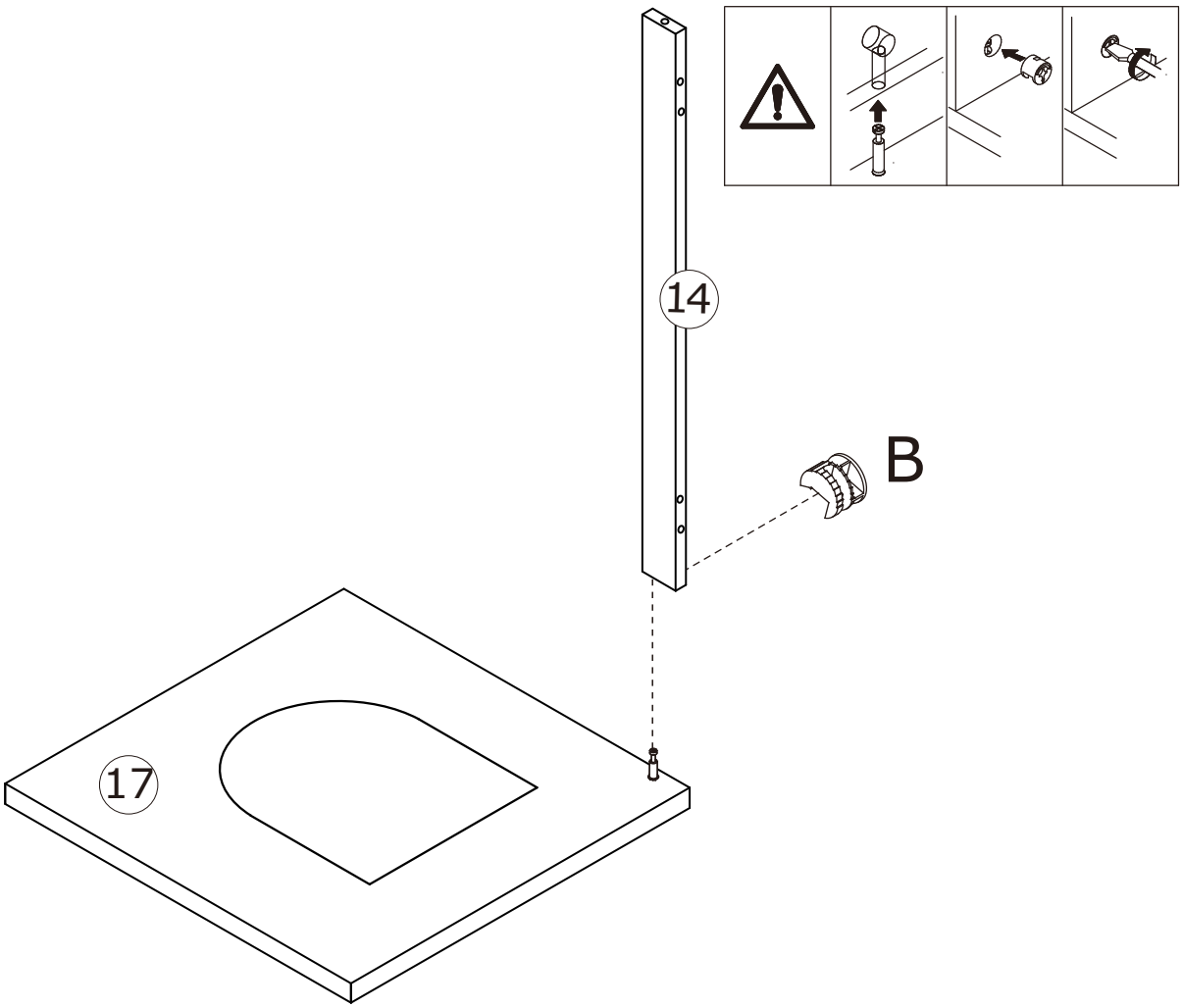

20

B x4

∅15 x 9.5 mm

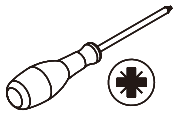

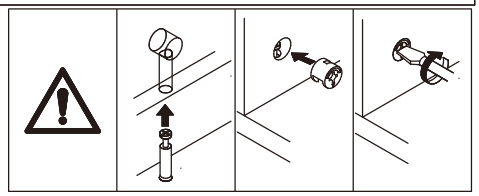

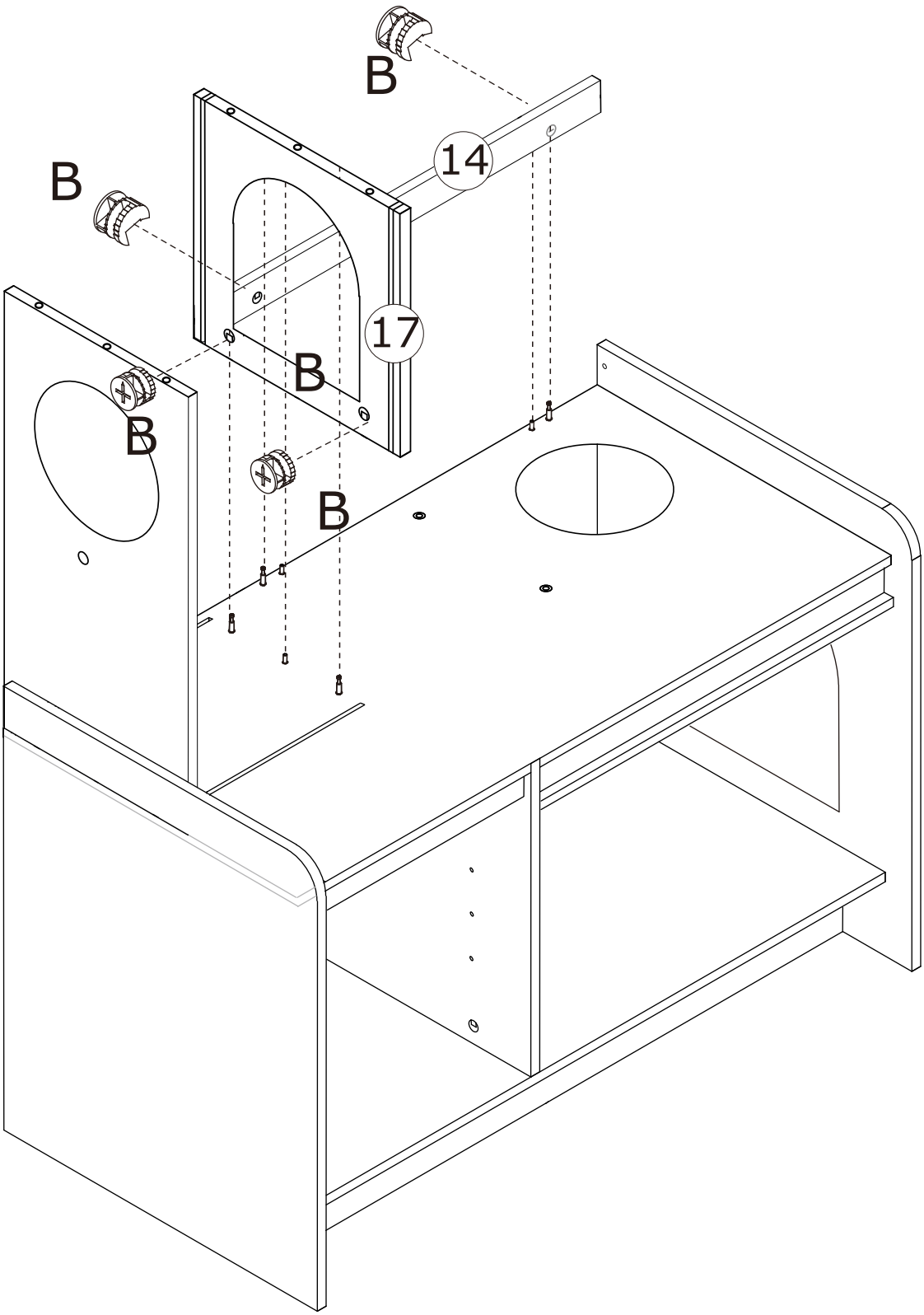

21

G x 1

∅5 x 40 mm

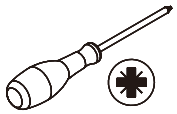

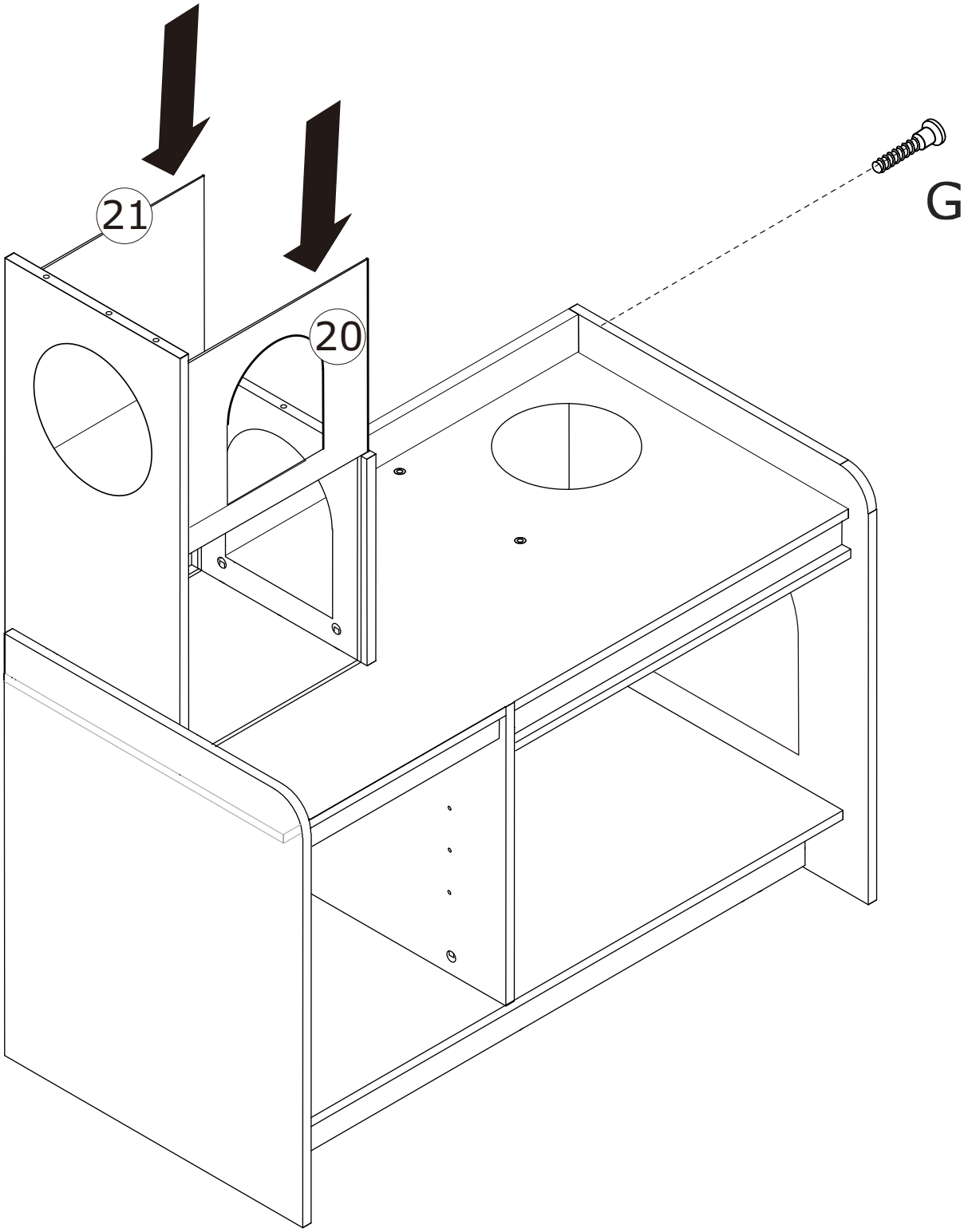

22

G x 4	C x 3	
∅5 x 40 mm	∅6 x 30 mm	

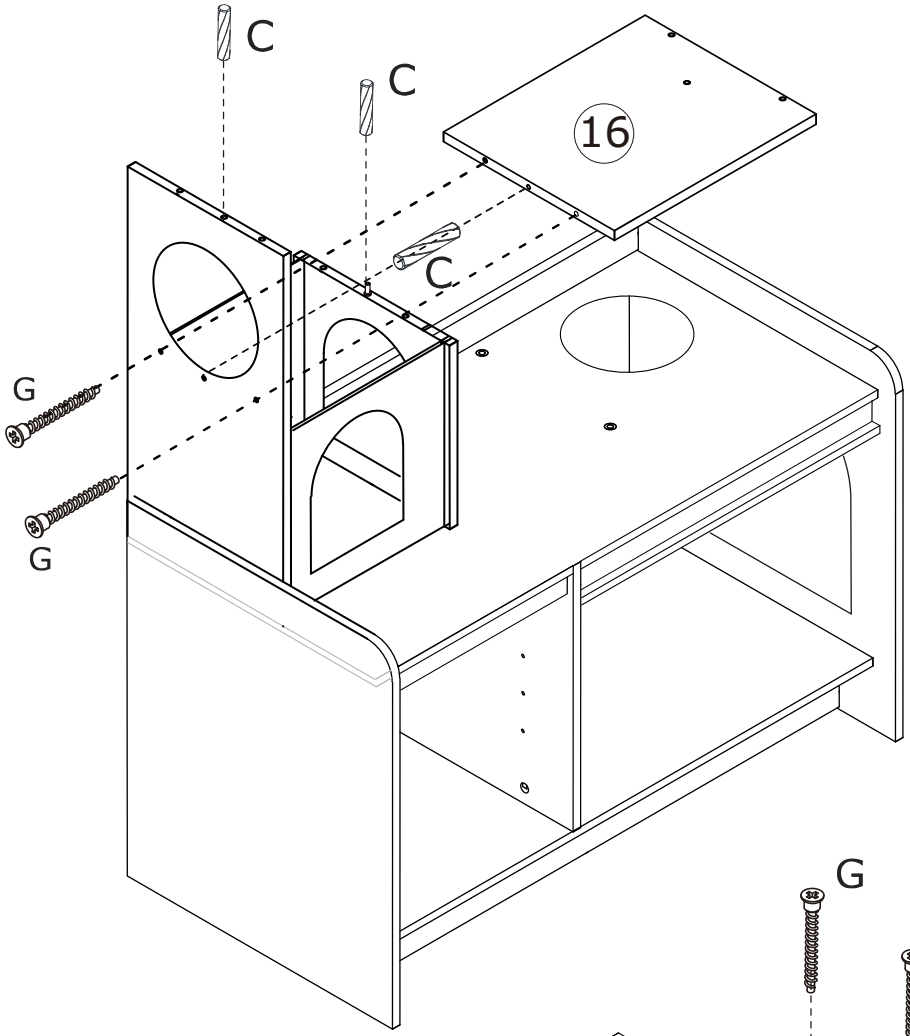

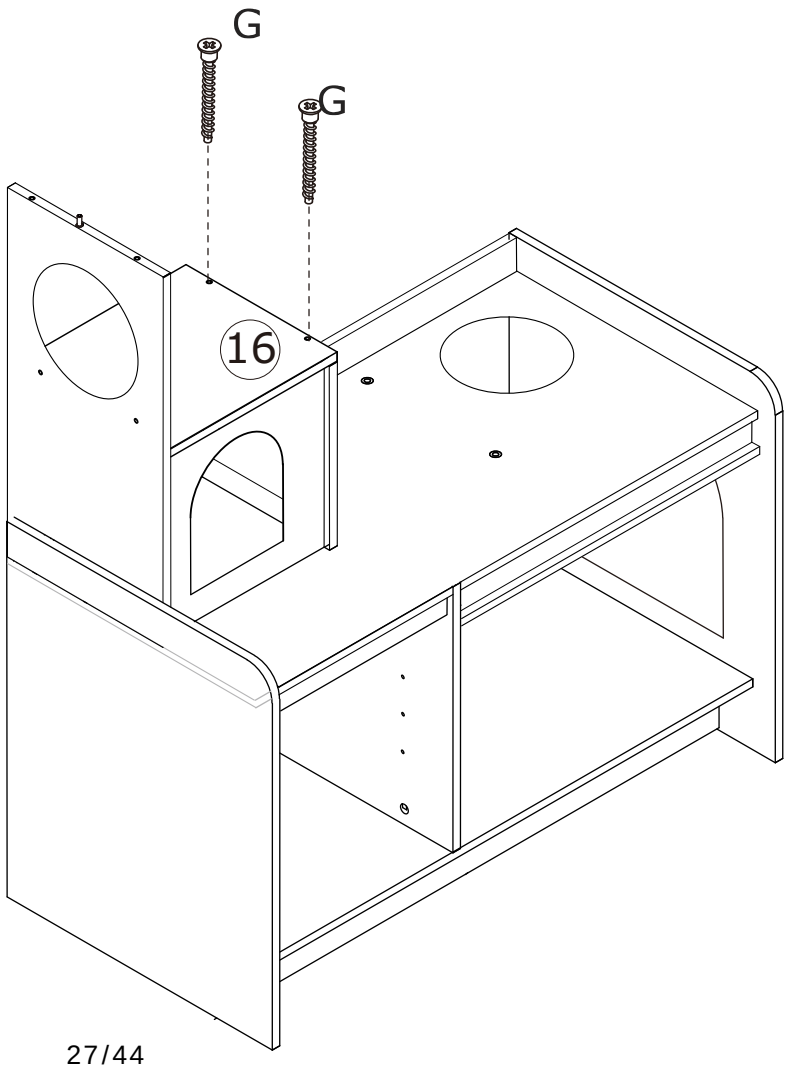

23

H x 3

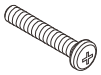

∅8 x 30 mm

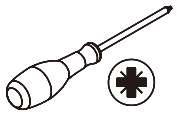

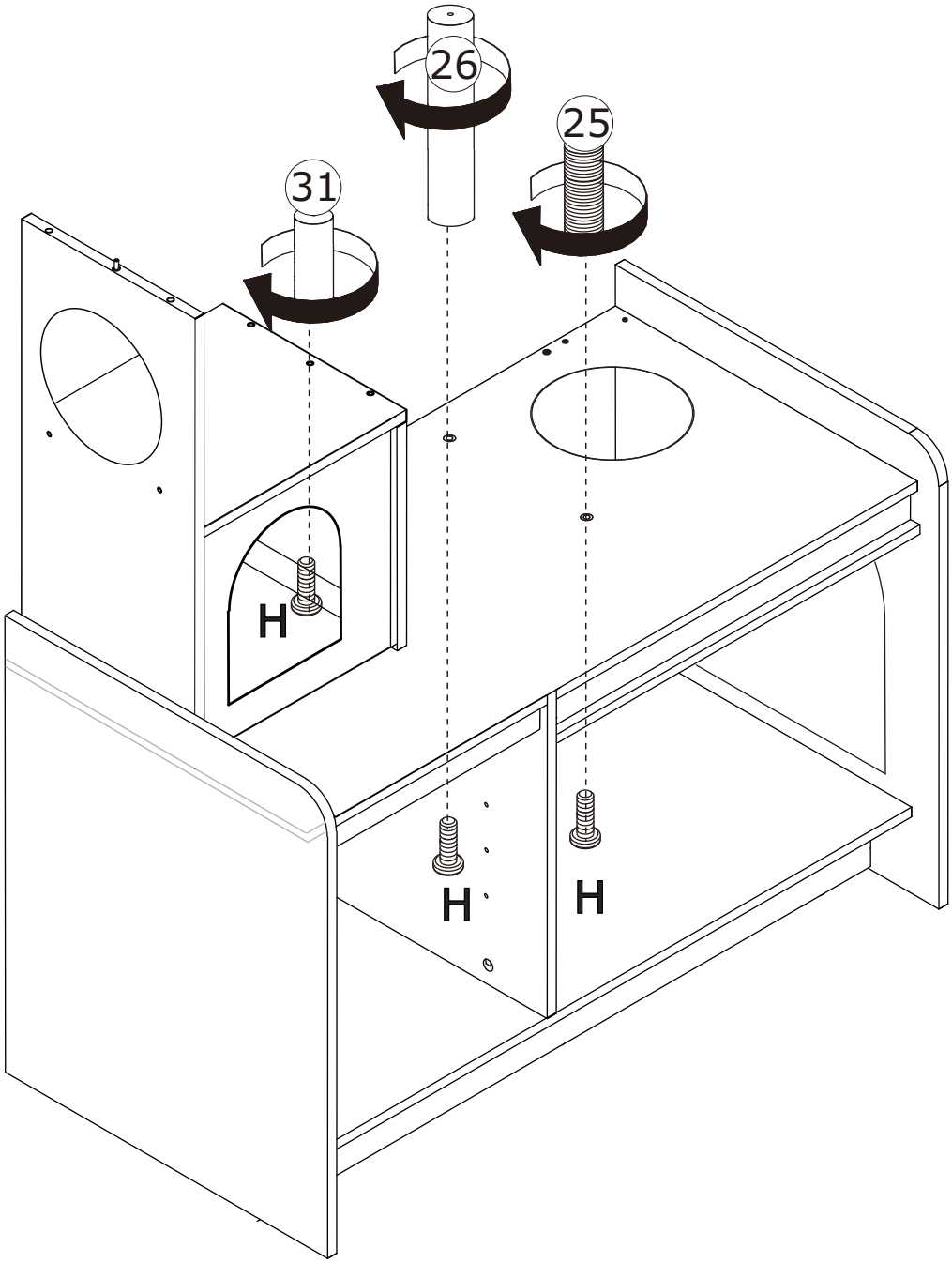

24

Q x 2

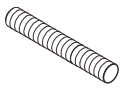

∅8 x 55 mm

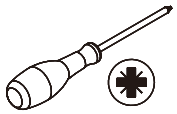

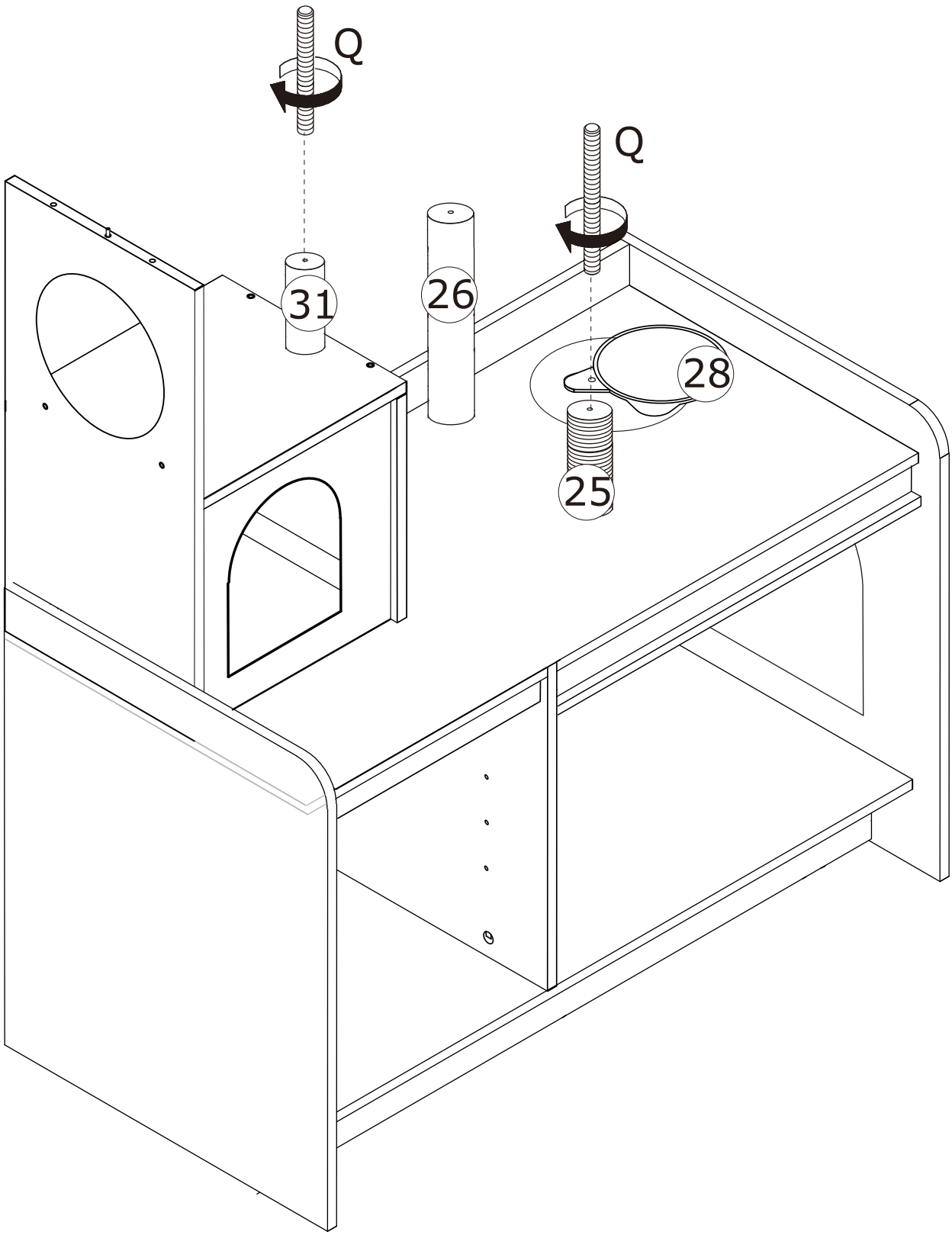

25

Q x 1

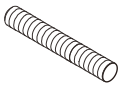

∅8 x 55 mm

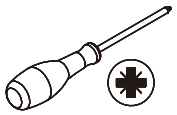

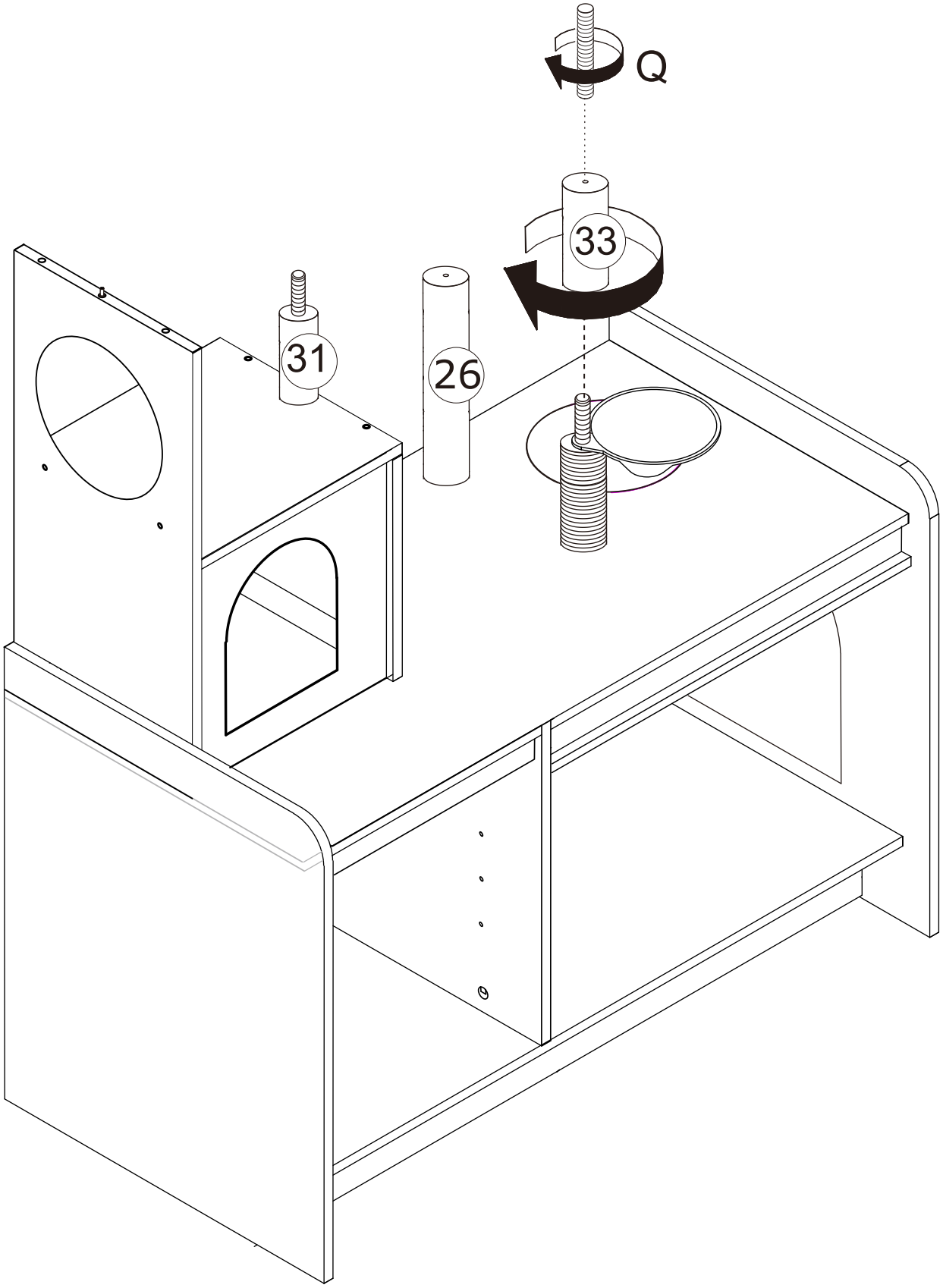

26

H x 1

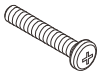

∅8 x 30 mm

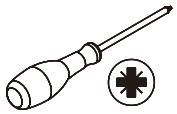

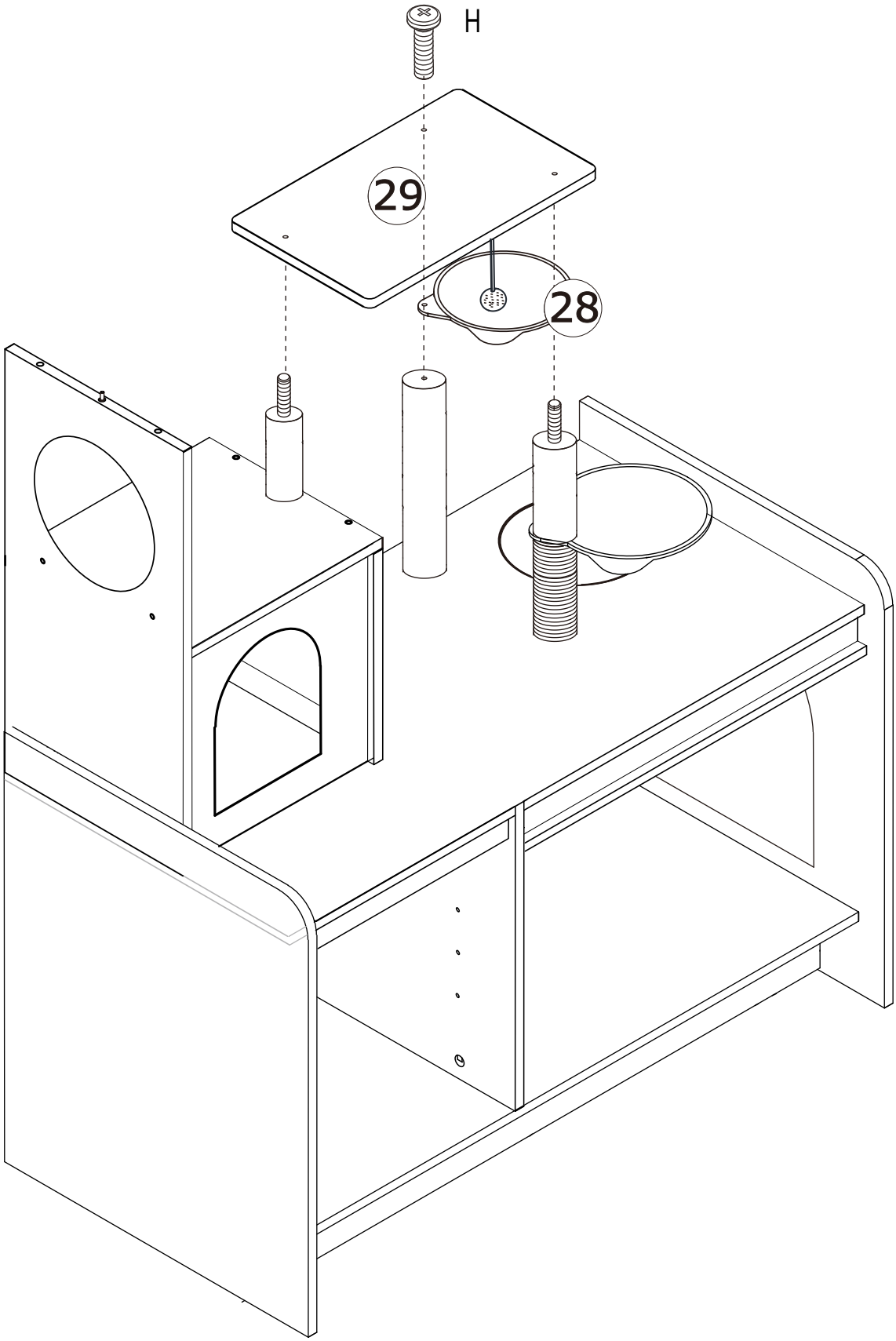

27

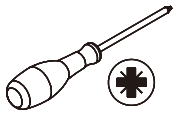

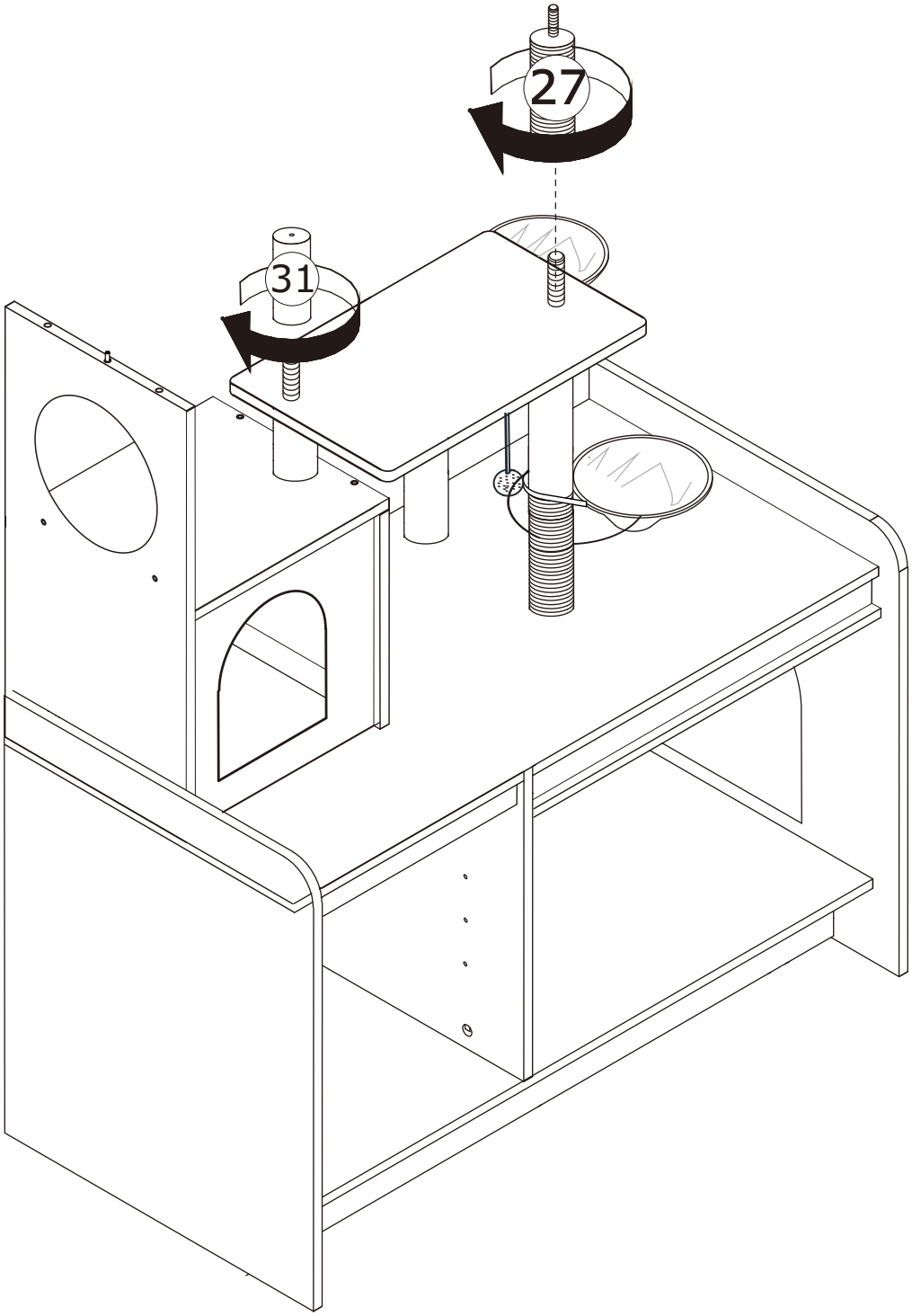

28

G x 2	H x 1	
	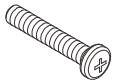	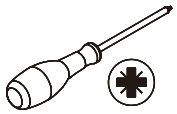
∅5 x 40 mm	∅8 x 30 mm	

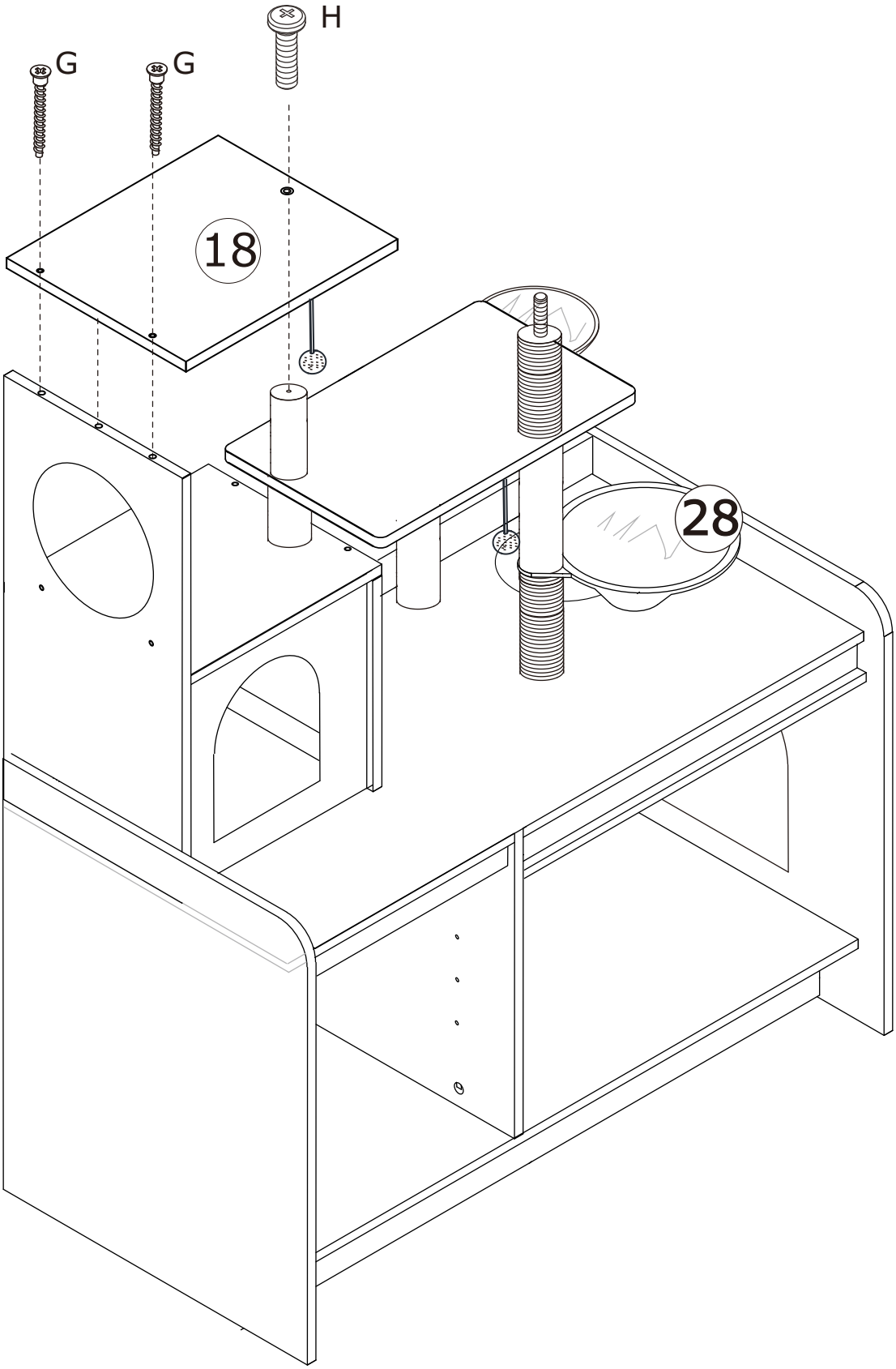

29

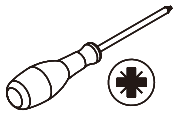

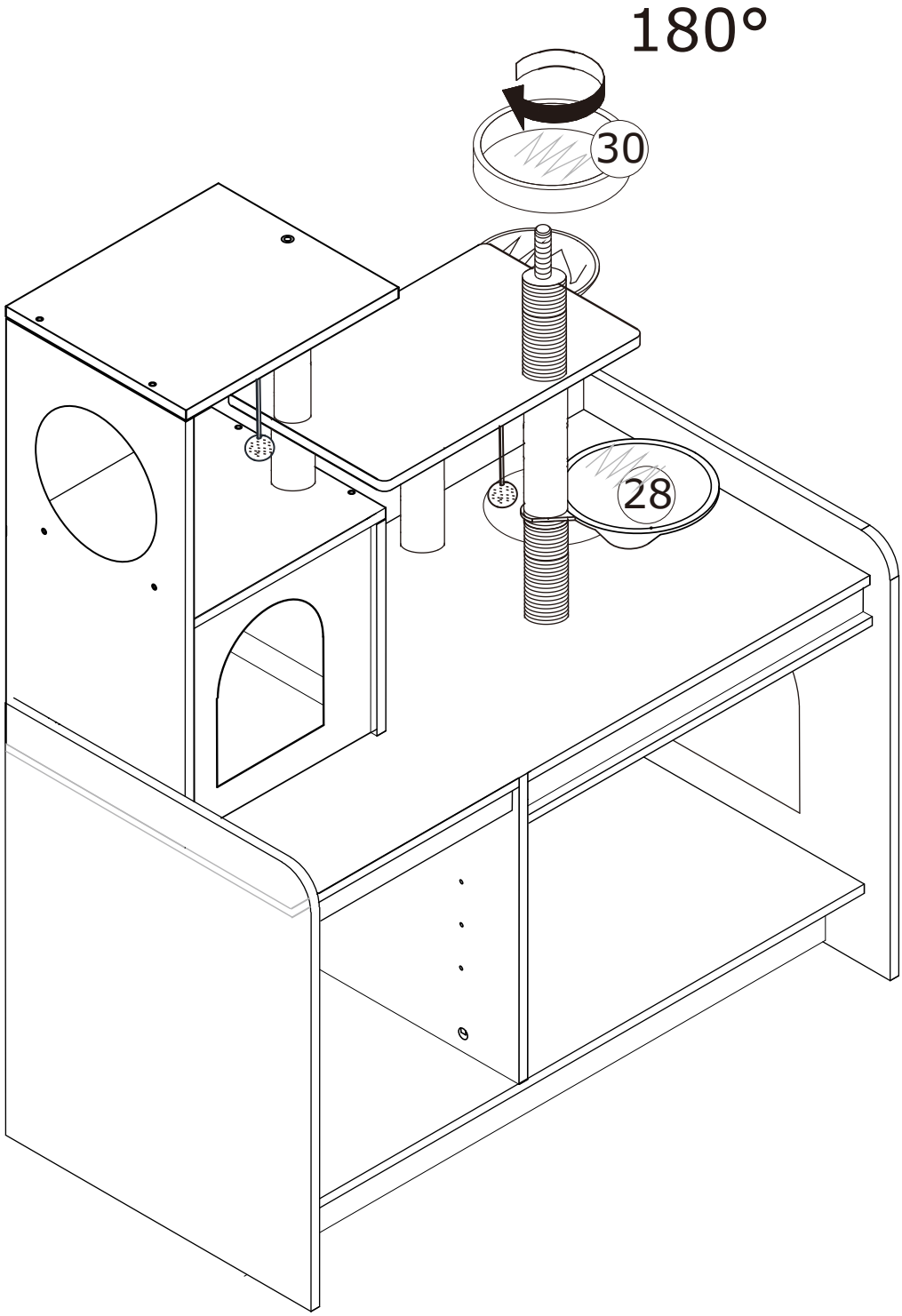

30

P. x8

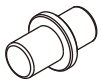

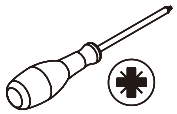

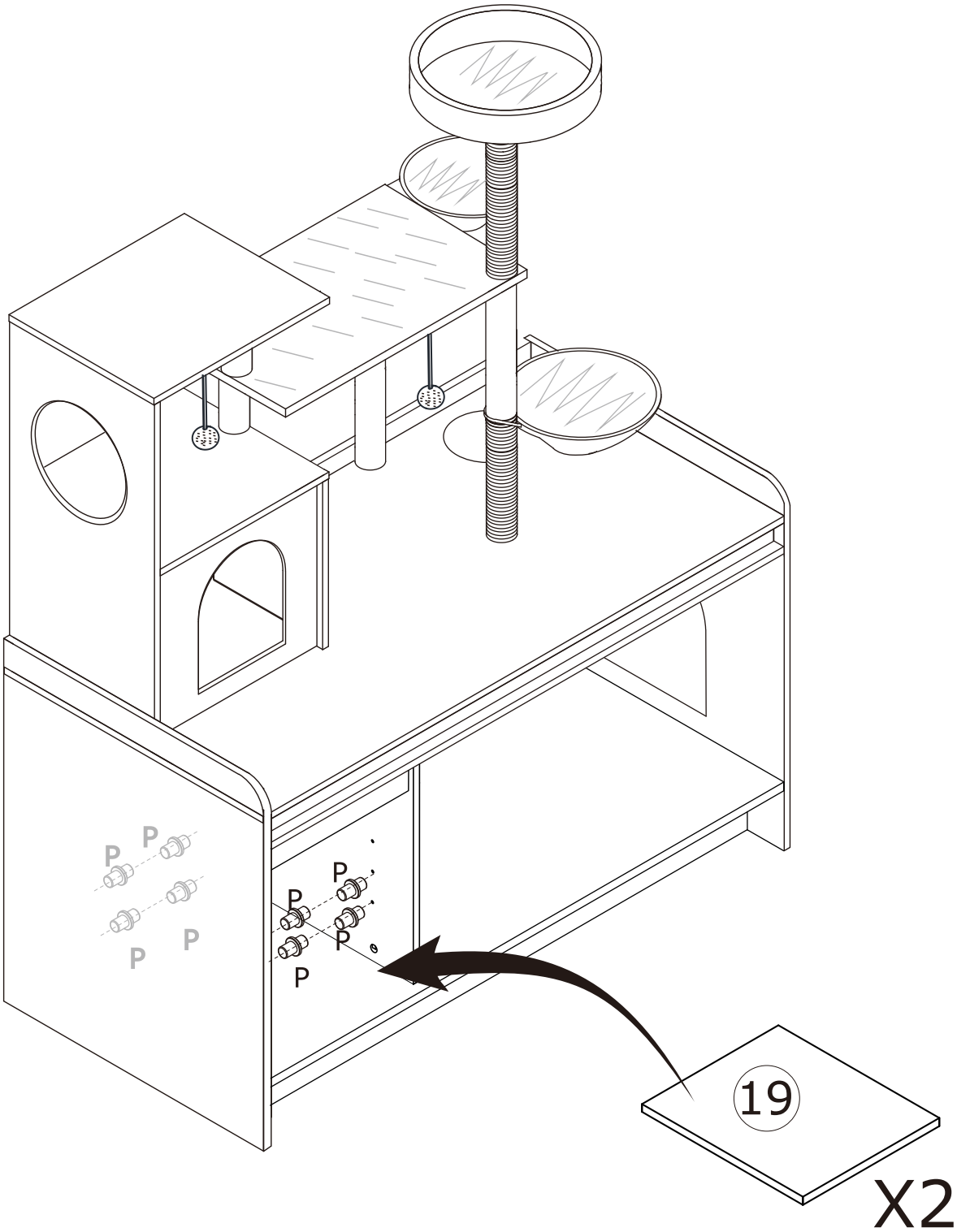

1.

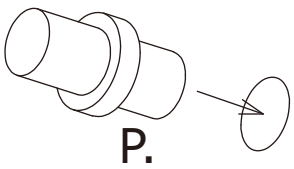

2.

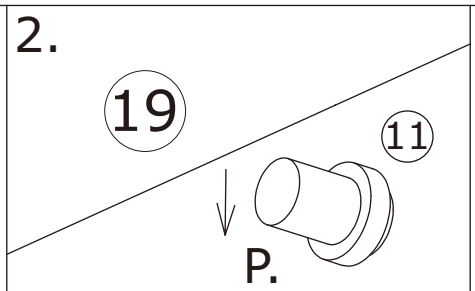

3.

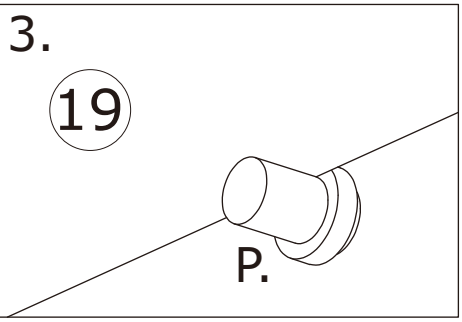

31

K x 2	Ex4	
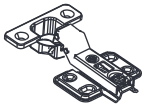	∅3.5 x 12 mm	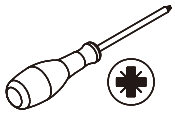

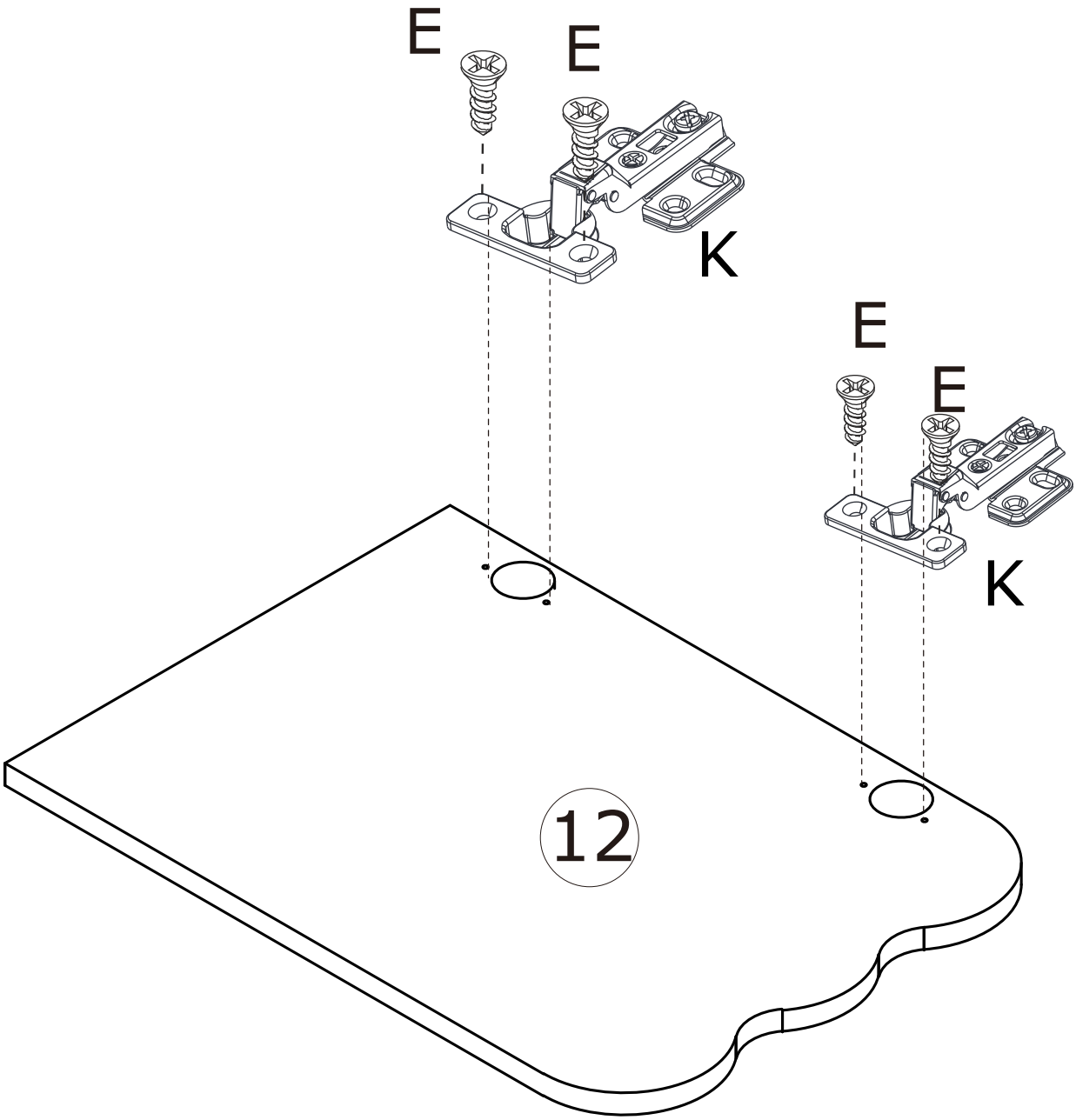

32

Ex8

3.5 x12 mm

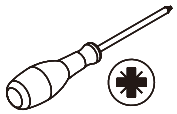

Note: It is forbidden to install the fixing hole screws first, otherwise it will lead to installation failure!

Remarque : Il est interdit d'installer d'abord les vis du trou de fixation, sinon cela entraînera un échec de l'installation !

Hinweis: Es ist verboten, zuerst die Befestigungslochschrauben zu montieren, da dies sonst zu einem Installationsfehler führt!

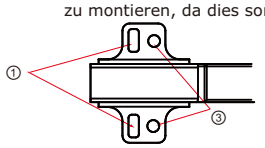

①Installez d'abord les vis du trou de réglage
②Mettez la porte dans la bonne position
③Montieren Sie abschließend die Befestigungslochschrauben

①Install the adjustment hole screws first
②Get the door in the right position
③ Finally, install the fixing hole screws

①Montieren Sie zuerst die Einstelllochschrauben
②Bringen Sie die Tür in die richtige Position
③Enfin, installez les vis du trou de fixation

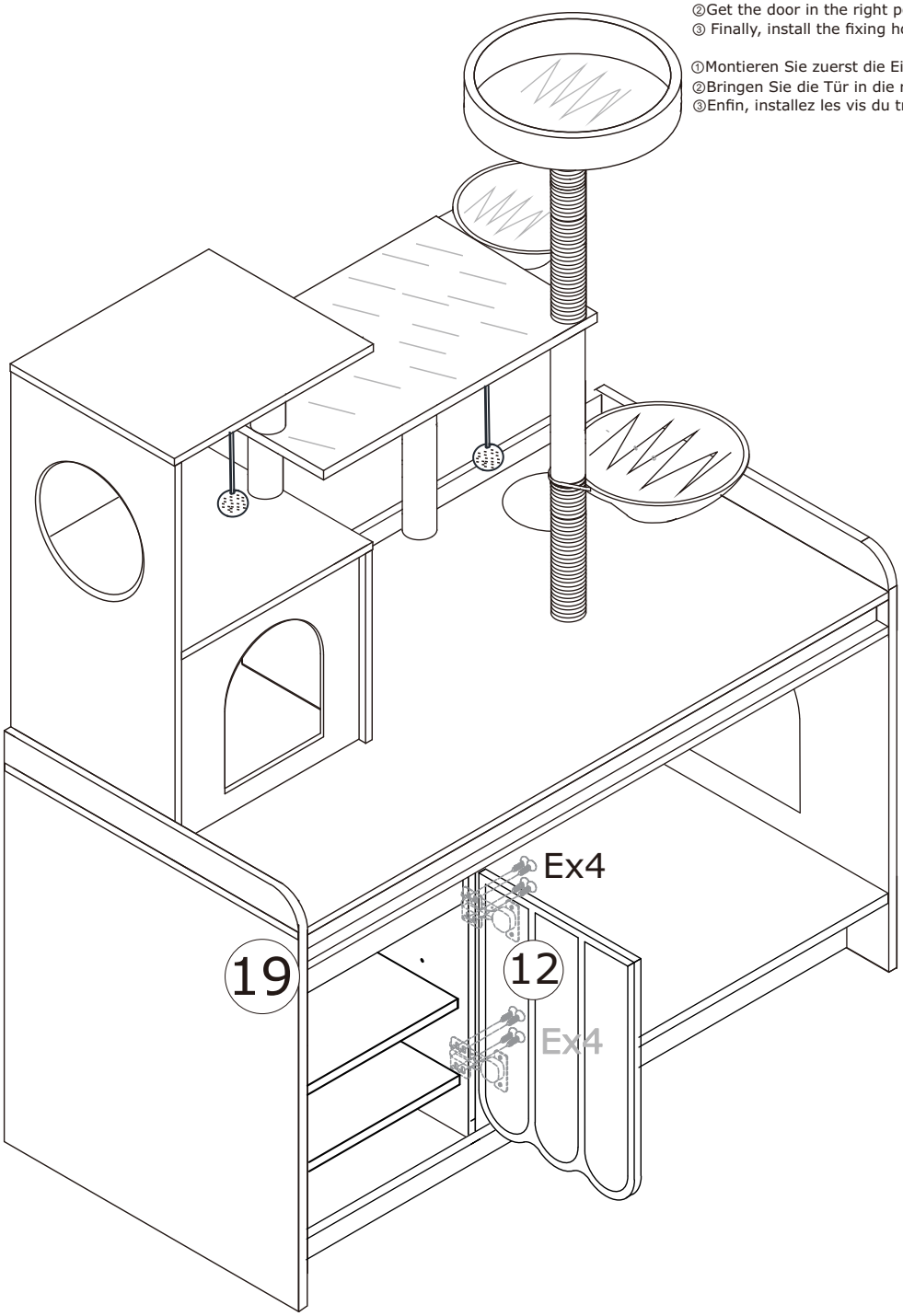

33

J x 4	Ex8	
	∅3.5 x12 mm	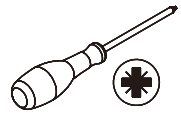

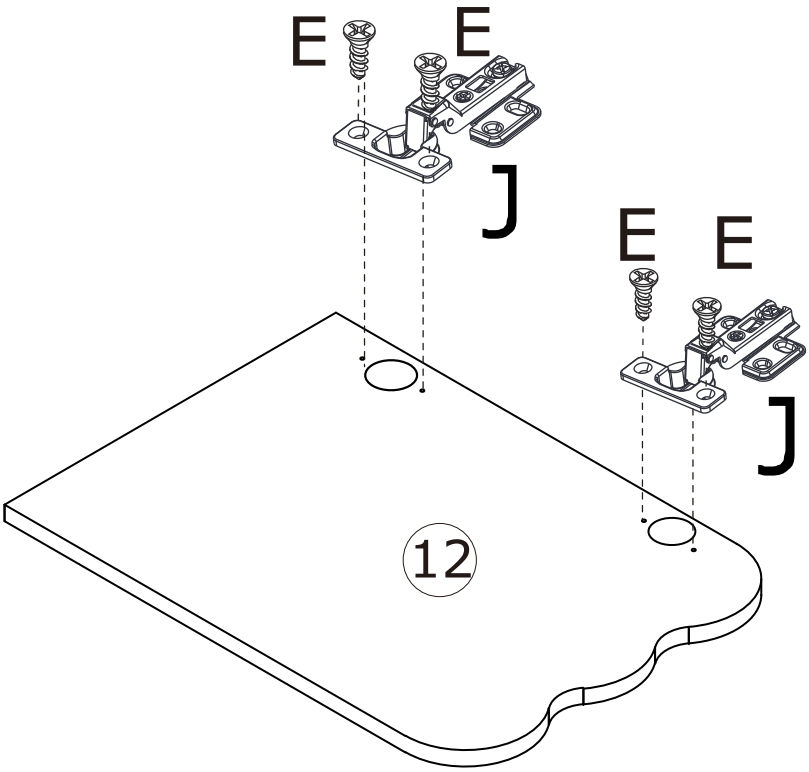

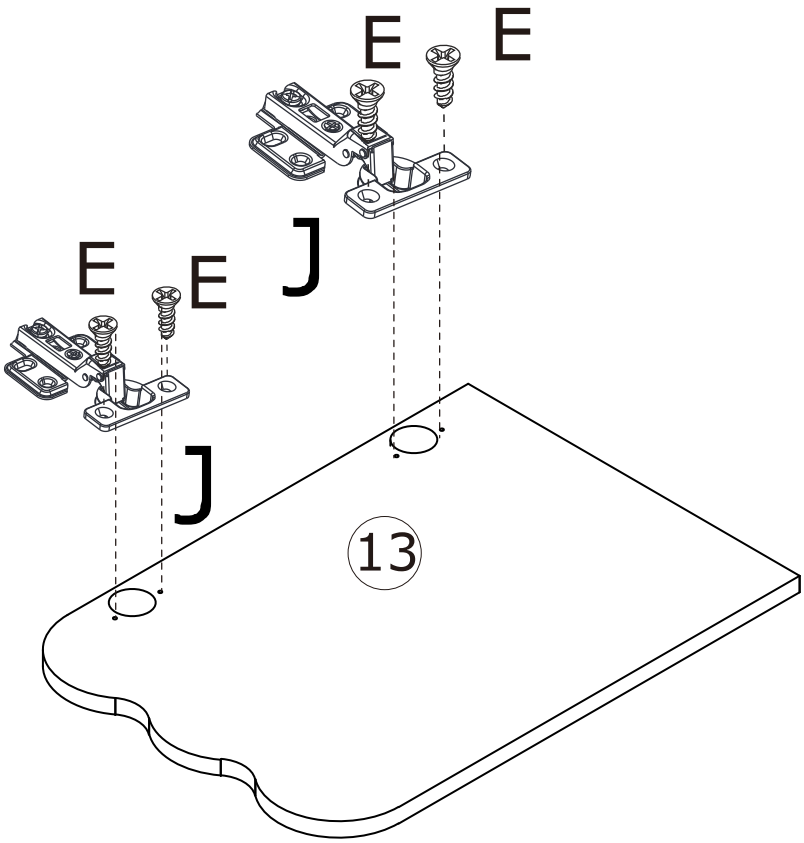

34

Ex16

3.5 x12 mm

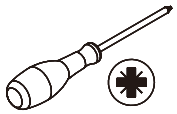

Note: It is forbidden to install the fixing hole screws first, otherwise it will lead to installation failure!

Remarque : Il est interdit d'installer d'abord les vis du trou de fixation, sinon cela entraînera un échec de l'installation !

Hinweis: Es ist verboten, zuerst die Befestigungslochschrauben zu montieren, da dies sonst zu einem Installationsfehler führt!

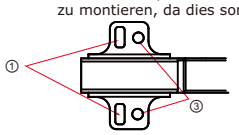

①Installez d'abord les vis du trou de réglage
②Mettez la porte dans la bonne position
③Montieren Sie abschließend die Befestigungslochschrauben

①Install the adjustment hole screws first
②Get the door in the right position
③ Finally, install the fixing hole screws

①Montieren Sie zuerst die Einstelllochschrauben
②Bringen Sie die Tür in die richtige Position
③Enfin, installez les vis du trou de fixation

Ex4

Ex4

13

12

Ex4

12

Ex4

35

A x 4	B x 4	C x 2	
∅6 x 35 mm	∅15 x 9.5 mm	∅6 x 30 mm	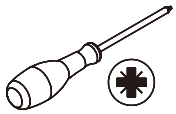

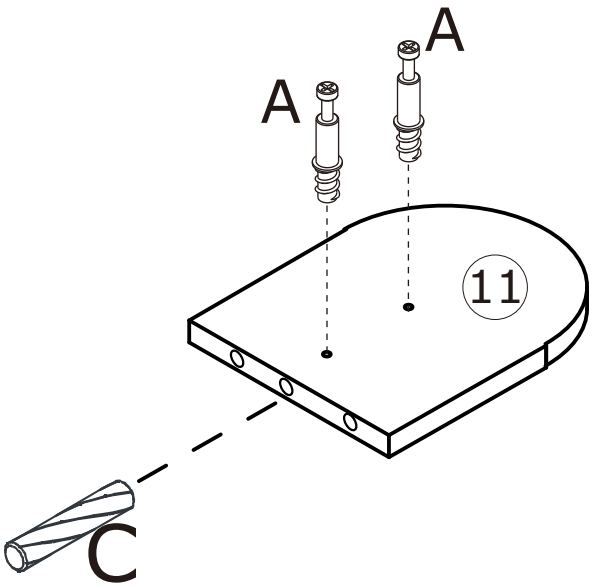

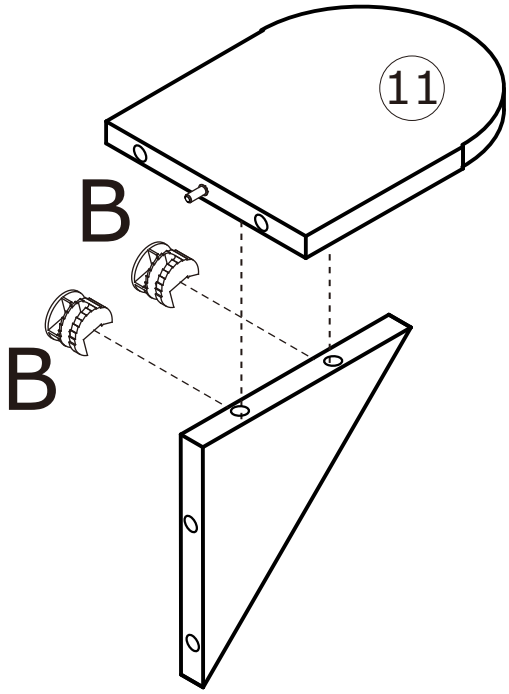

x2

36

G x 8

∅5 x 40 mm

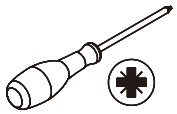

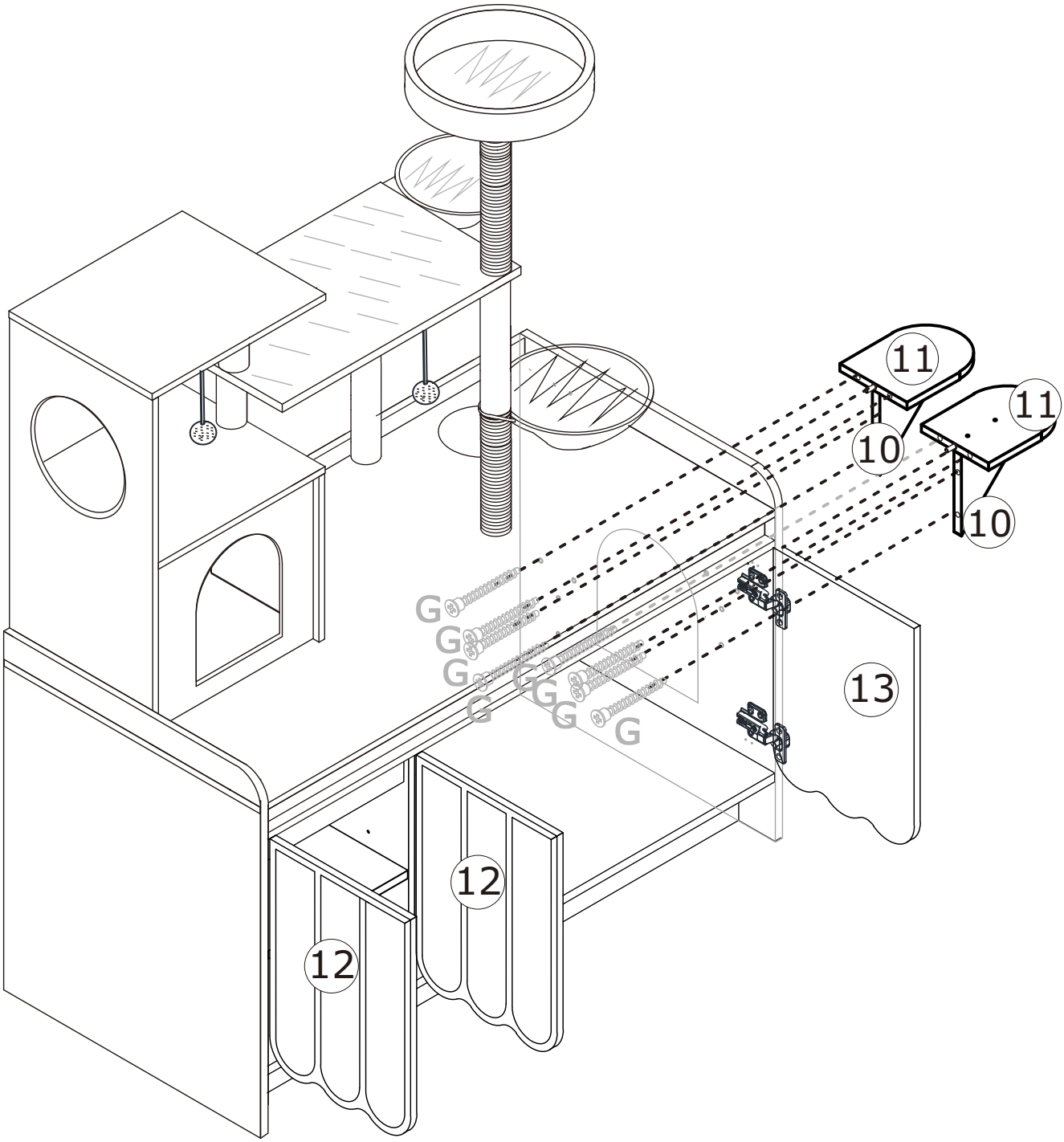

37

N x 2

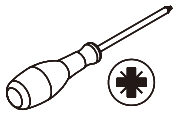

WALL

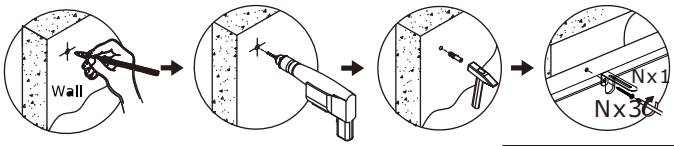

A solid wall	B cavity wall	C solid wood
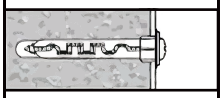	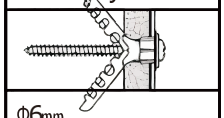	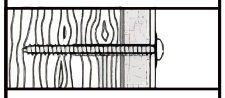
Φ6mm (1/4')	Φ6mm (1/4')	Φ4mm (1/8')

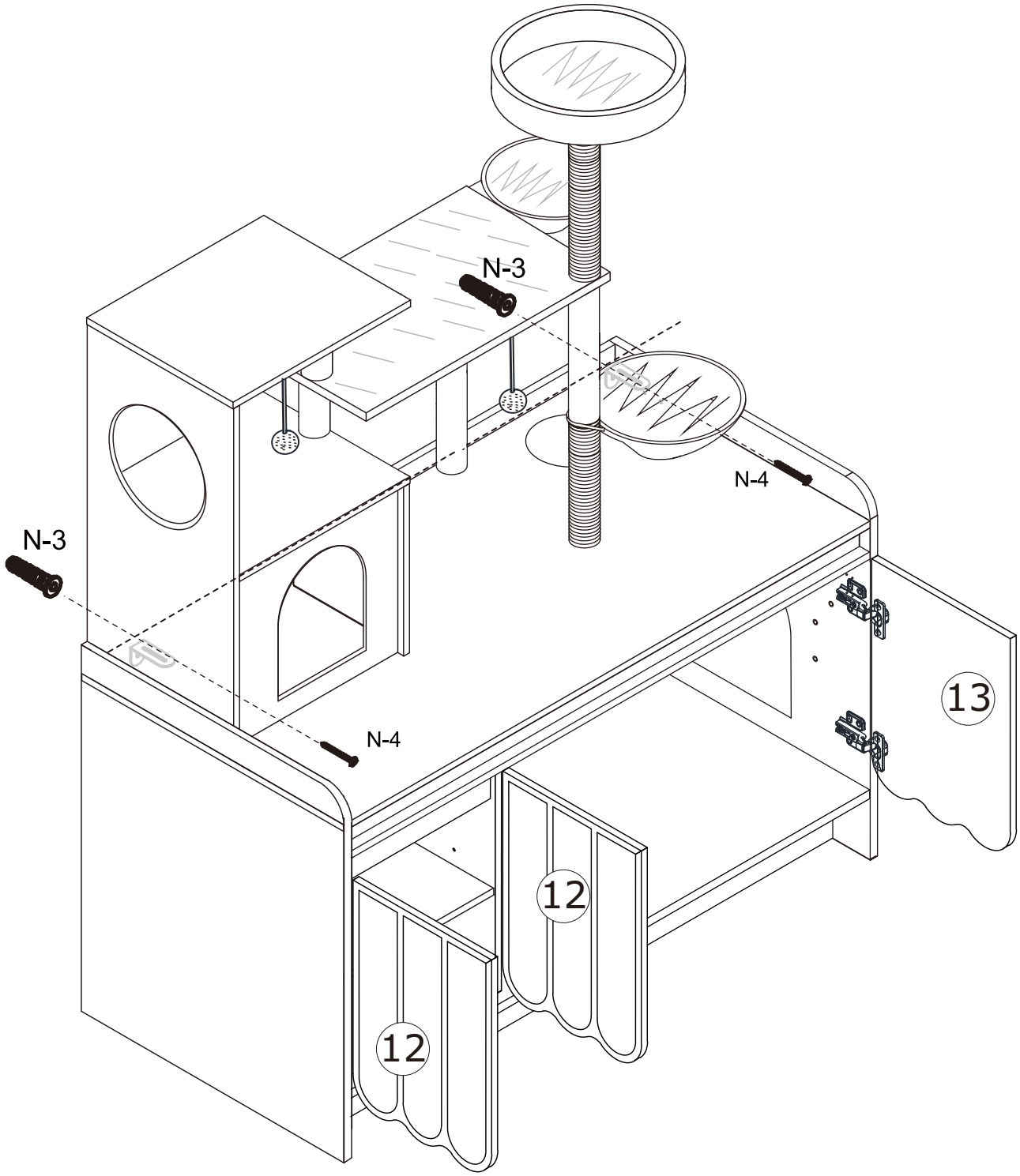

38

F x 42

M x 6

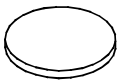

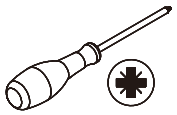

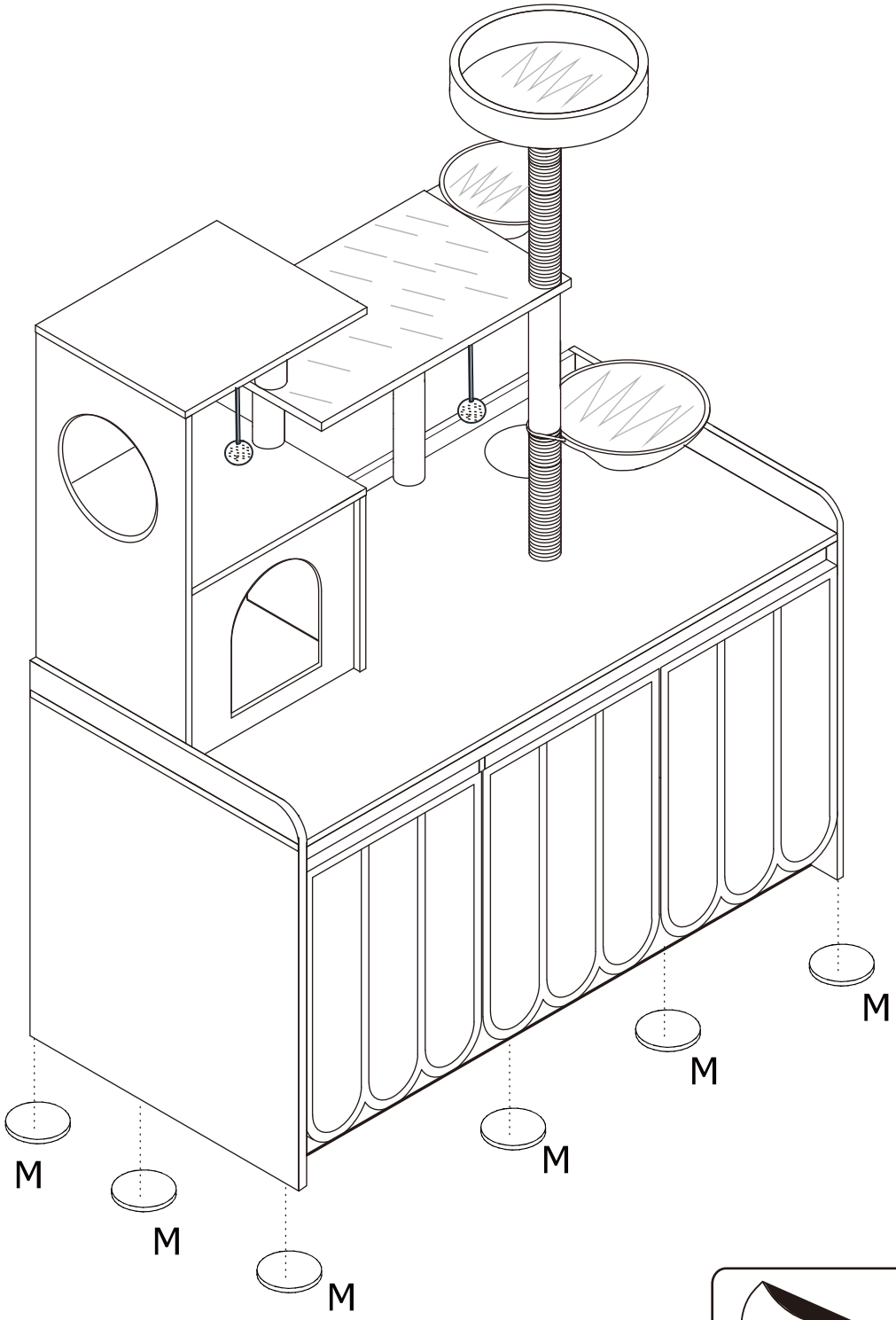

M

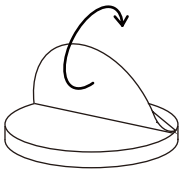

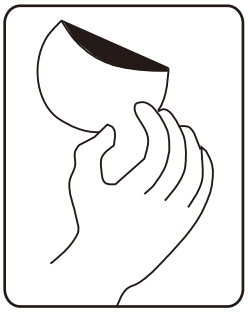

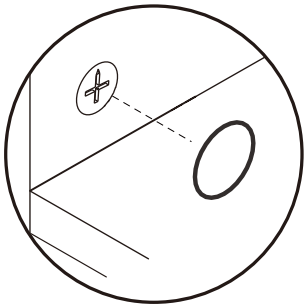

39

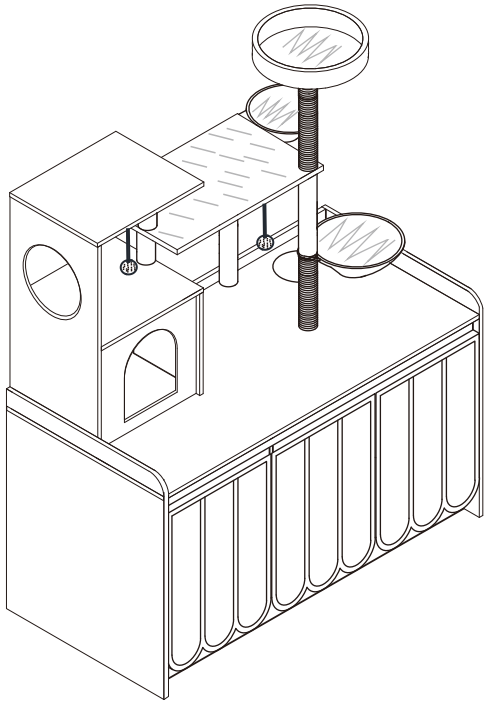
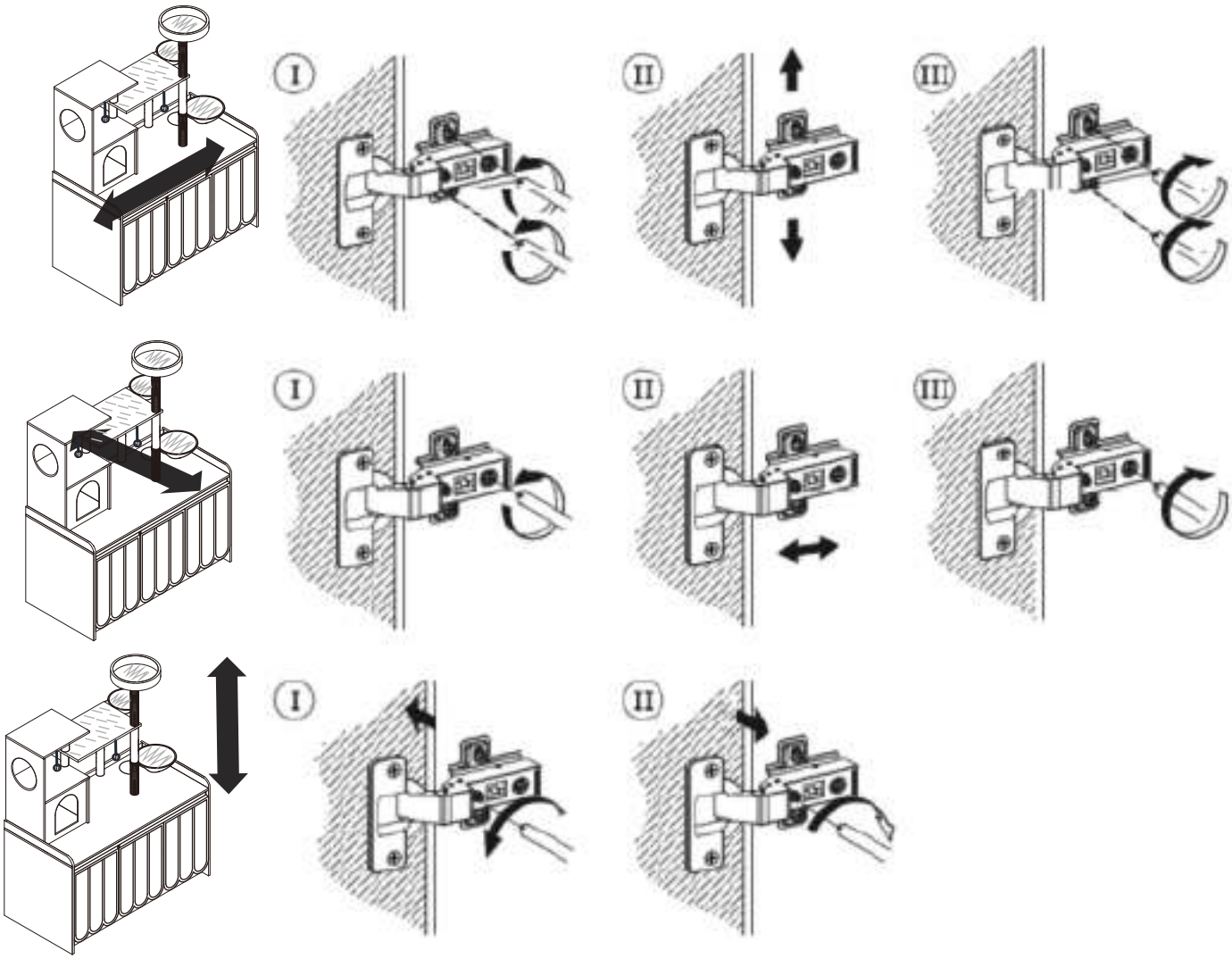
If there is misalignment after you install,
adjust the screw to the best condition