Pure Modern 480 & 481 Executive Desk Top & Base Production

Overall: 70" x 35.5" x 30"

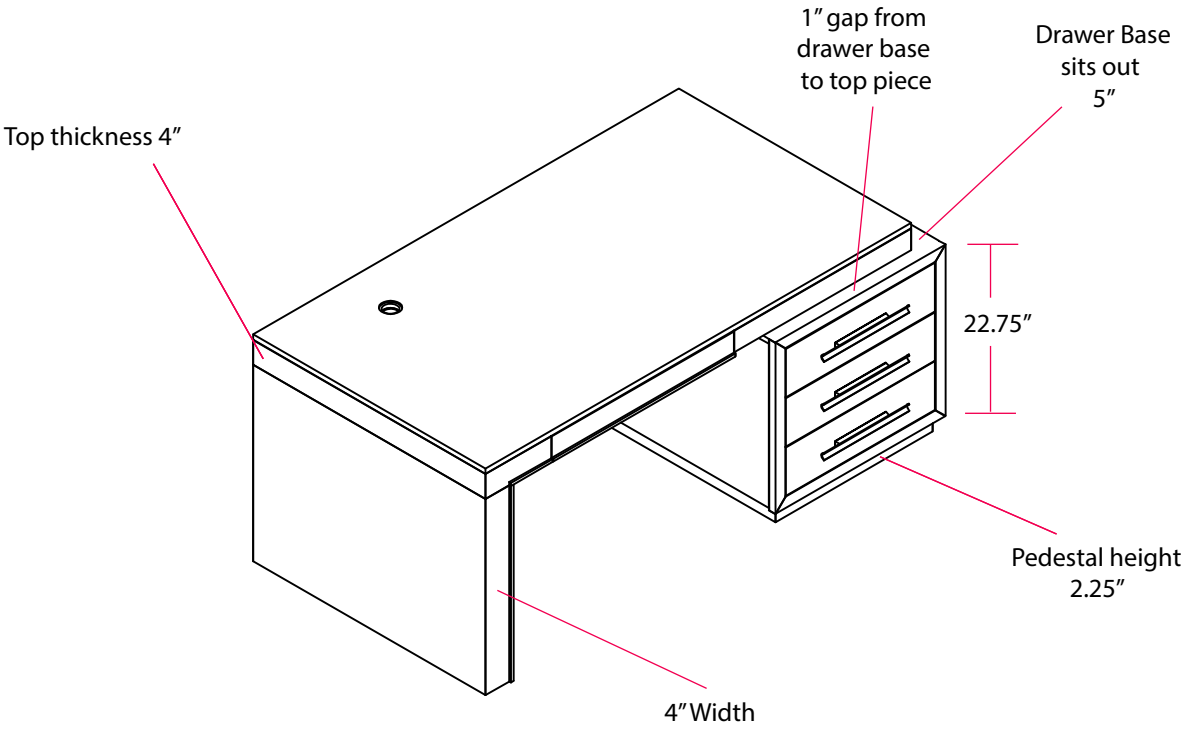
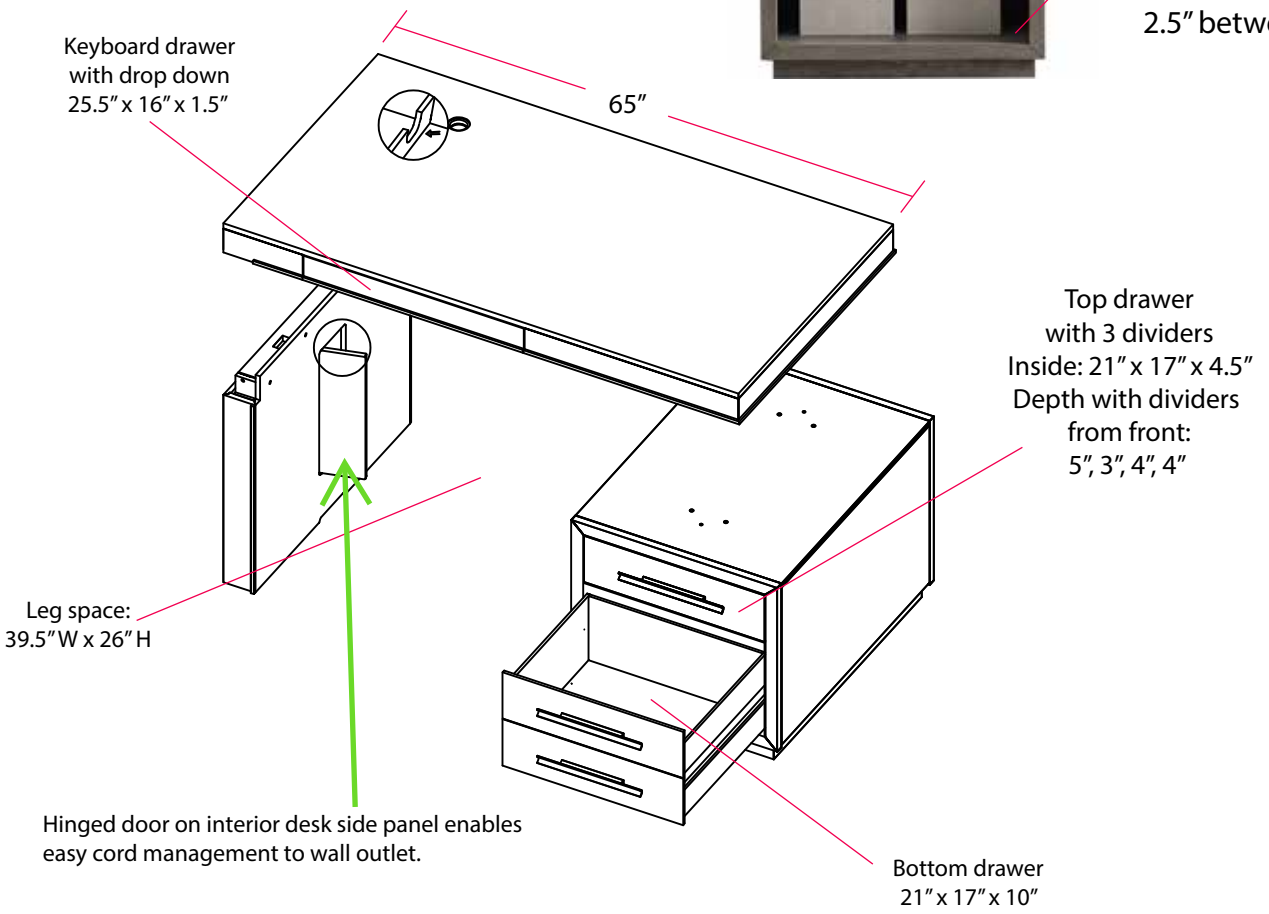
Back side of Pedestal
Inside: 24.5" x 15" x 20.5"
Front: 23" x 16" x 19.5"
1 adjustable shelf
3 holes, bottom to first 7.5"
2.5" between each hole