teamson®
home

Extended Warranty
Sign Up

E-2

Welcome home!

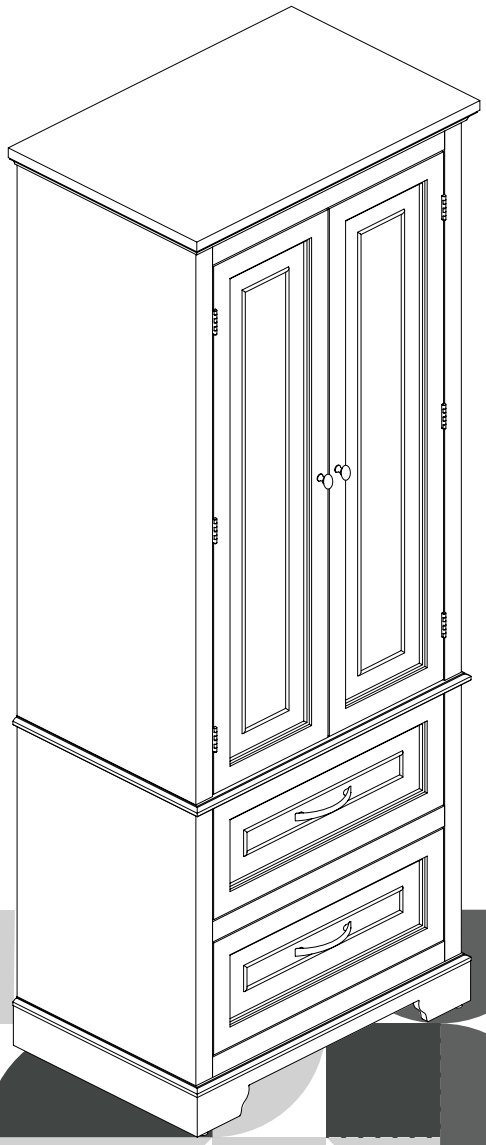

THF6025WT

TEAMSON HOME
Linen Tower
2 Door 2 Drawer

Warranty

LIMITATIONS
All components are warranted by the manufacturer for 30 days after the date of purchase by the original owner against defects in materials and workmanship under normal use. If it is appropriate to replace your product due to specific defects, the manufacturer will replace the purchase with the same or comparable product.

GENERAL TERMS & CONDITIONS
1.Proof of purchase is required to request a claim under this warranty.

2.This warranty applies only to manufacturer error and defects. The warranty applies to the following:
a.Breaks and cracks in the product that originated with the manufacturer.
b.Missing pieces.
c.Stains that occurred during the manufacturing process.

3.This warranty does not apply to the following:
a.Damage due to improper loading, handling, or transportation.
b.Any costs associated with the installation and removal of products or parts subject to this warranty.
c.Acts of God.
d.Products which have been subject to negligence, abuse, accident, misapplication, tampering, alteration, or modification.
e.Products which have been subject to improper installation, operation, maintenance, repair, or storage.
f.Products which have been subject to defects that occur when this product is used incorrectly and /or outside of normal application purposes.
g.Products that have had, including but not limited to, operational failures caused by corrosion, rust, or other foreign materials in the system, or operation at pressures over recommended maximums.
h.All other possible defects not mentioned here that would not have occurred during manufacturing or during correct, routing use of the item.

INSTRUCTIONS
For specific instructions on how to obtain warranty service for your product, please contact Global Customer Support using the contact information provided on page 01. In most circumstances, you will need to return your product either in its original packaging or in equally protective packaging to the address specified by Global Customer Support.
Before delivering your product for warranty service, it is your responsibility to remove all personal items and belongings you have stored with our product. Teamson is not responsible for the possible loss, destruction, or damage of any personal items or belongings that have been sent with the product.

DISCLAIMER
Any oral statements made about the product by the seller, the manufacturer, the representatives, or any other parties do not constitute warranties should not be relied upon by the user and are not part of the contract for sale. The seller’s and manufacturer’s only obligation, and buyers only remedy shall be for the manufacturer to either replace and/or repair at the manufacturer's sole discretion, the product as described above. Neither seller not the manufacturer shall be liable for an injury, loss, or damages for lost profits, lost sales, injury to person or property, or any other incidental or consequential loss arising from any cause whatsoever, no matter whether based upon warranty, contract, negligence or other misuse, and the buyer and user agree that no other remedy shall be available to them. Before using the buyer and user shall determine the suitability of the product for intended use and assume all risk and liability whatsoever in connection therewith. The warranty and remedy described in this limited warranty is an exclusive warranty and remedy instead of any other warranty or remedy expressed or implied. All other warranties and remedies are hereby expressly excluded, including but not limited to any implied warranty of merchantability of fitness for any particular purpose.

Questions? Comments? Need help?
Call or email us any time!

Global Customer Support

USA / CA

✉ **support@teamson.com**
+1(770) 246-4898
Mon - Fri 9 AM - 4 PM EST

EU / UK

✉ **support@teamson.co.uk**
+44(0)1952-916-050
Mon - Thur 9 AM - 5 PM GMT
Fri 9 AM - 4 PM GMT

ASIA

深圳办公室：
✉ **sales_ec@teamson.com**
+86(0755)8885-3558.分机号108
Mon - Sat 9 AM - 5 PM GMT+8

台北辦公室：
✉ **support@teamson.com.tw**
+886 2 2558 0755 ext. 318
Mon - Fri 9 AM - 5 PM GMT+8

AU

✉ **support@teamson.com.au**

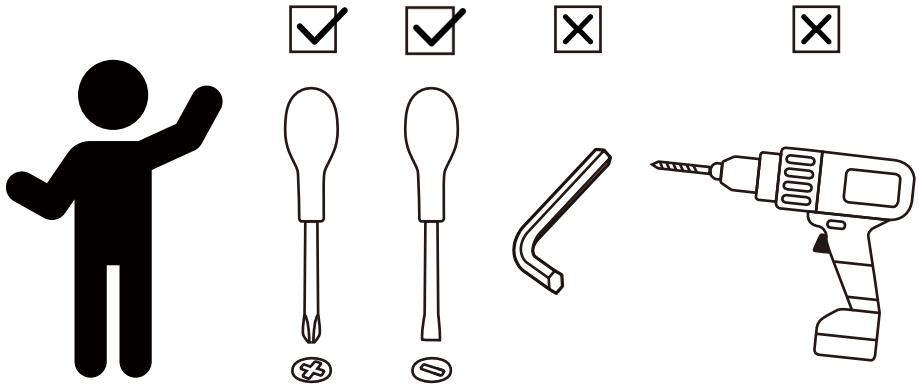

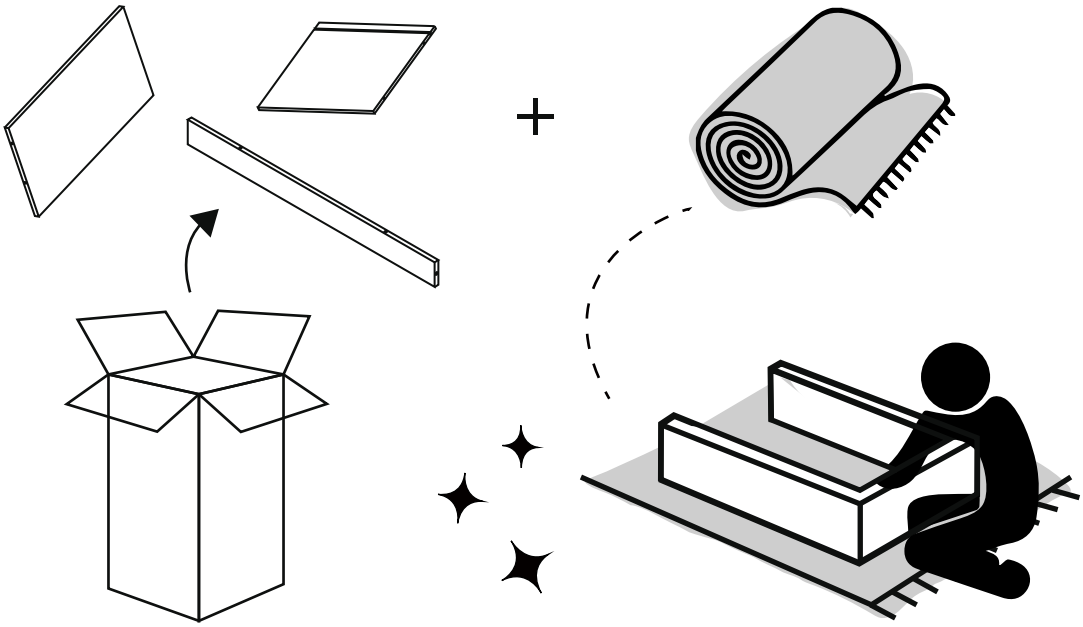

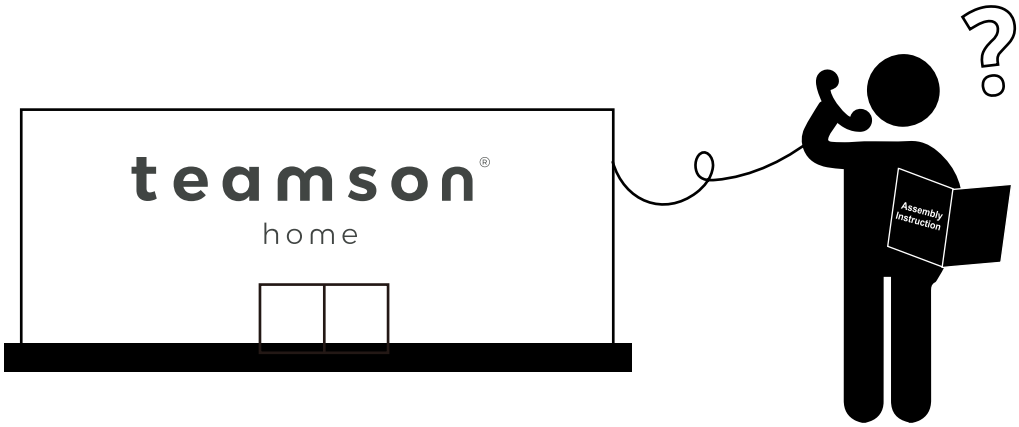

** Got questions? Please have your product code (on the first page of this instruction, e.g. TD-12345A) and the order number ready, give us a call or email us through our customer care support! We are always ready to assist you!

Exploded Drawing

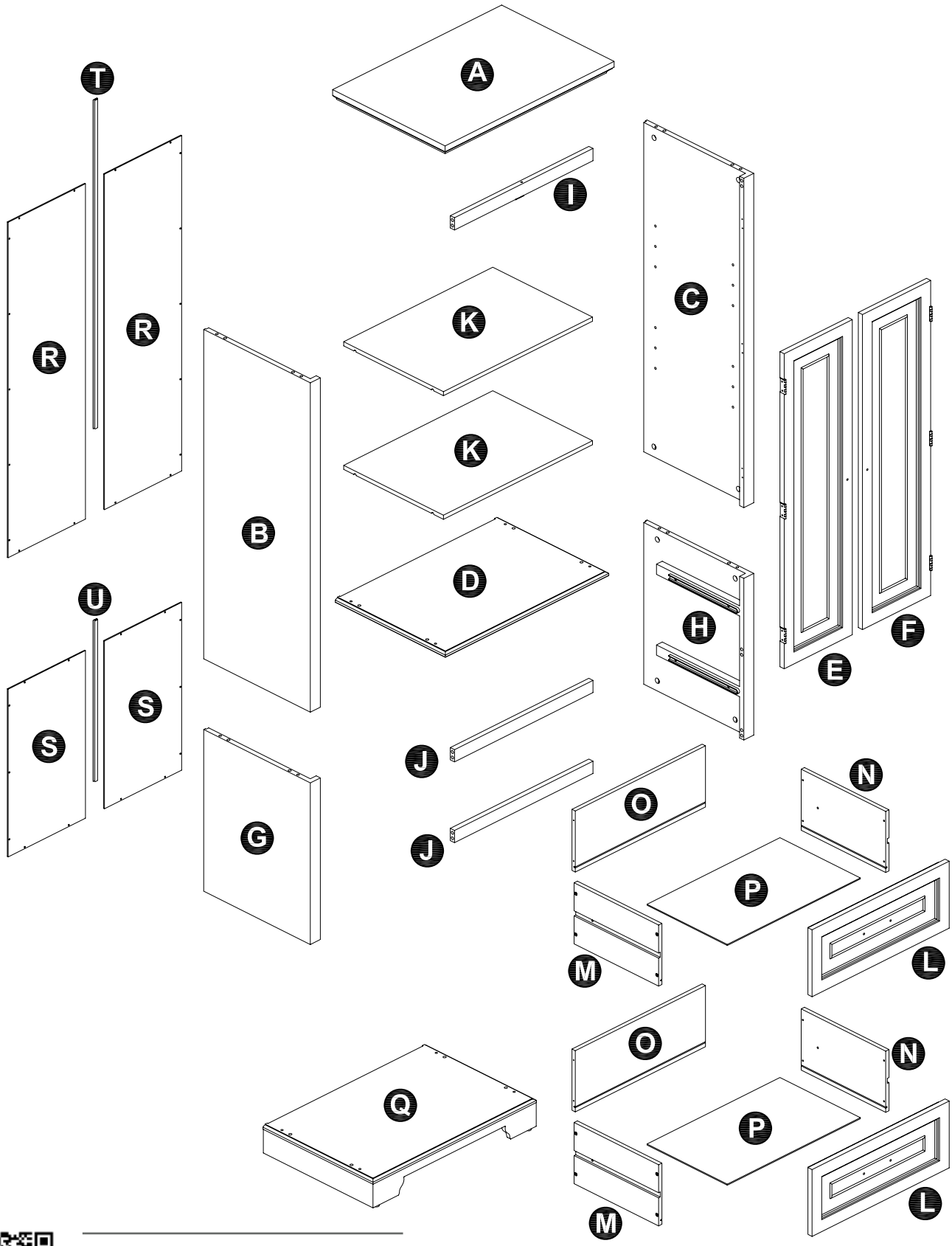

Scan for assembly instructions.

Product Parts

A	B	C	D	E
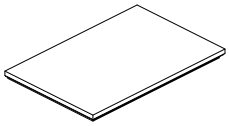	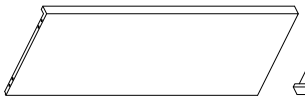	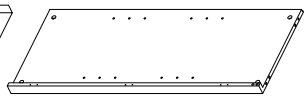	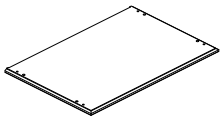	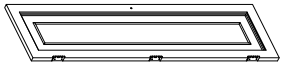
1 PC	1 PC	1 PC	1 PC	1 PC

F	G	H	I	J
	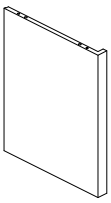	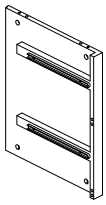	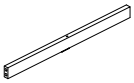	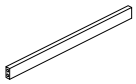
1 PC	1 PC	1 PC	1 PC	2 PCS

K	L
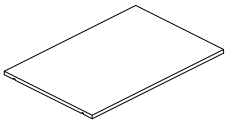	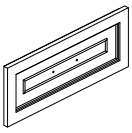
2 PCS	2 PCS

⚠ Care Instructions

Dust surface with a dry soft cloth. Do not use window cleaners or cleaning abrasives as they will scratch the surface and could damage the protective coating

Scan for assembly instructions.

⚠ WARNING

Small parts and sharp edges may be present prior to assembly.

Product Parts

M	N	O	P	Q
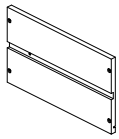	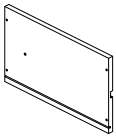	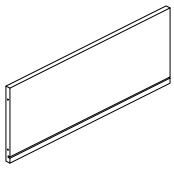	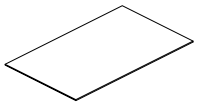	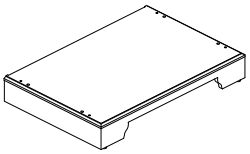
2 PCS	2 PCS	2 PCS	2 PCS	1 PC

R	S	T	U
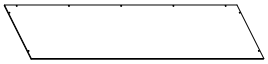	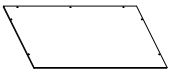		
2 PCS	2 PCS	1 PC	1 PC

Scan for assembly instructions.

Hardware

1	2	3	4	5	6
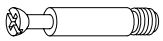	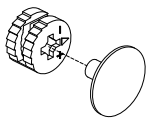 Ø15*9mm	Ø6*30mm	Ø3*10mm	Ø4*25mm	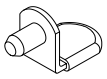
16 PCS	16 PCS	28 PCS	12 PCS	16 PCS	8 PCS

7	8	9	10	11	12
Ø3*12mm	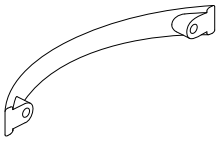		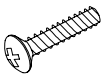 Ø5/32″*14mm		Ø4*35mm
28 PCS	2 PCS	2 PCS	6 PCS	4 PCS	1 PC

13	14	15	16
	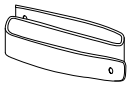	Ø4*38mm	
1 PC	1 PC	2 PC	2 PCS

Scan for assembly instructions.

Step 1

1 4 pcs

3 Ø6*30mm 12 pcs

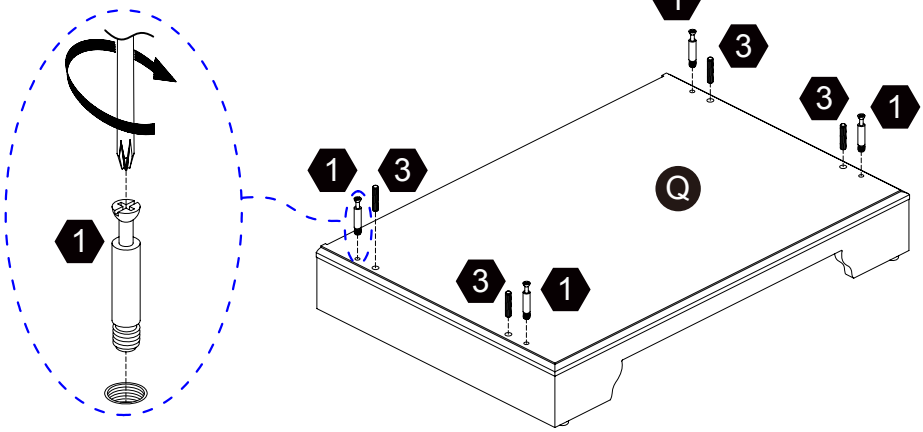

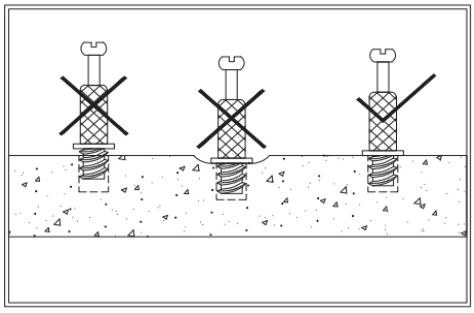

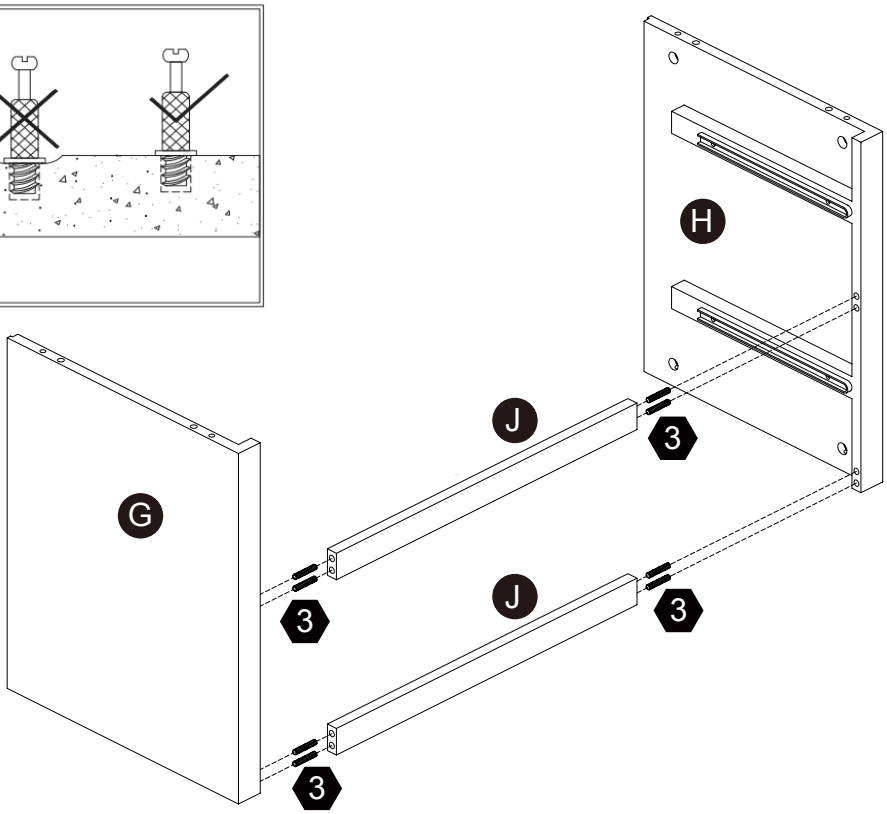

Scan for assembly instructions.

Step 2

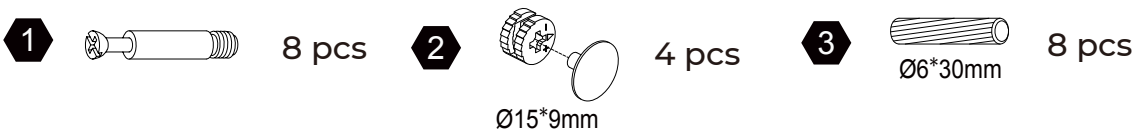

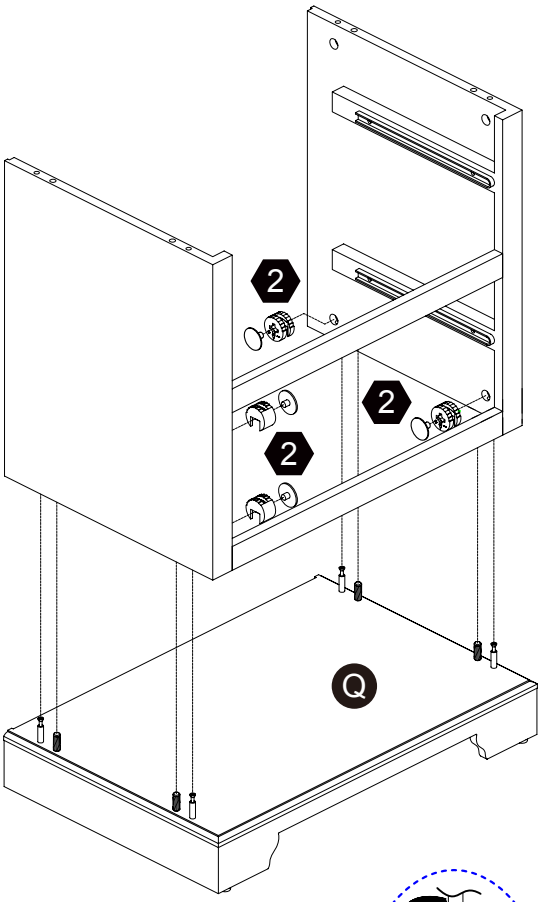

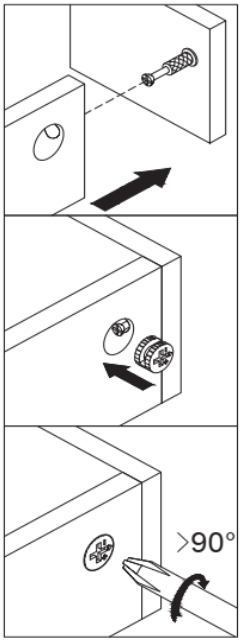

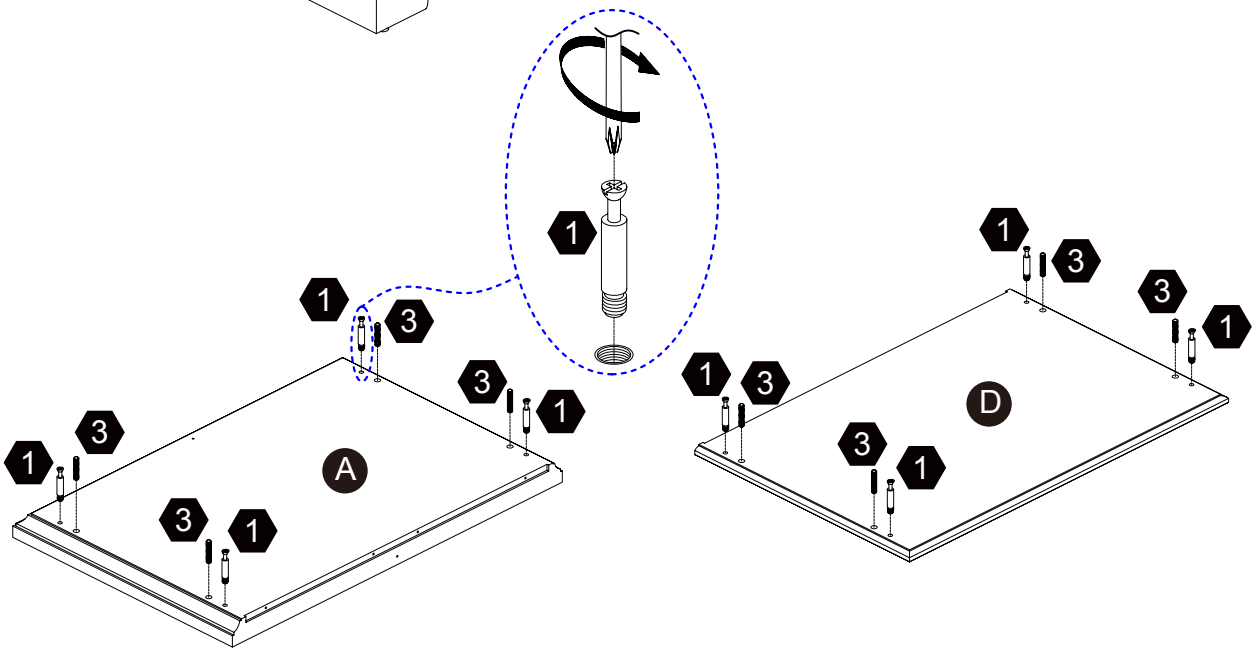

Scan for assembly instructions.

Step 3

2 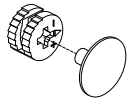 8 pcs
Ø15*9mm

3 4 pcs
Ø6*30mm

12 1 pc
Ø4*35mm

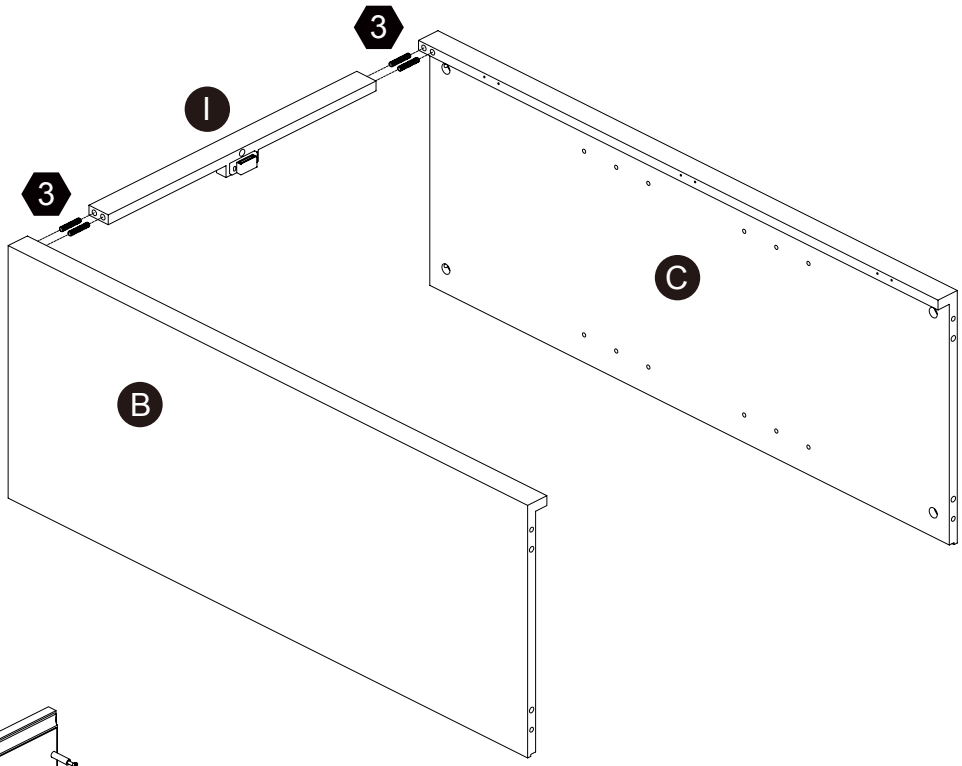

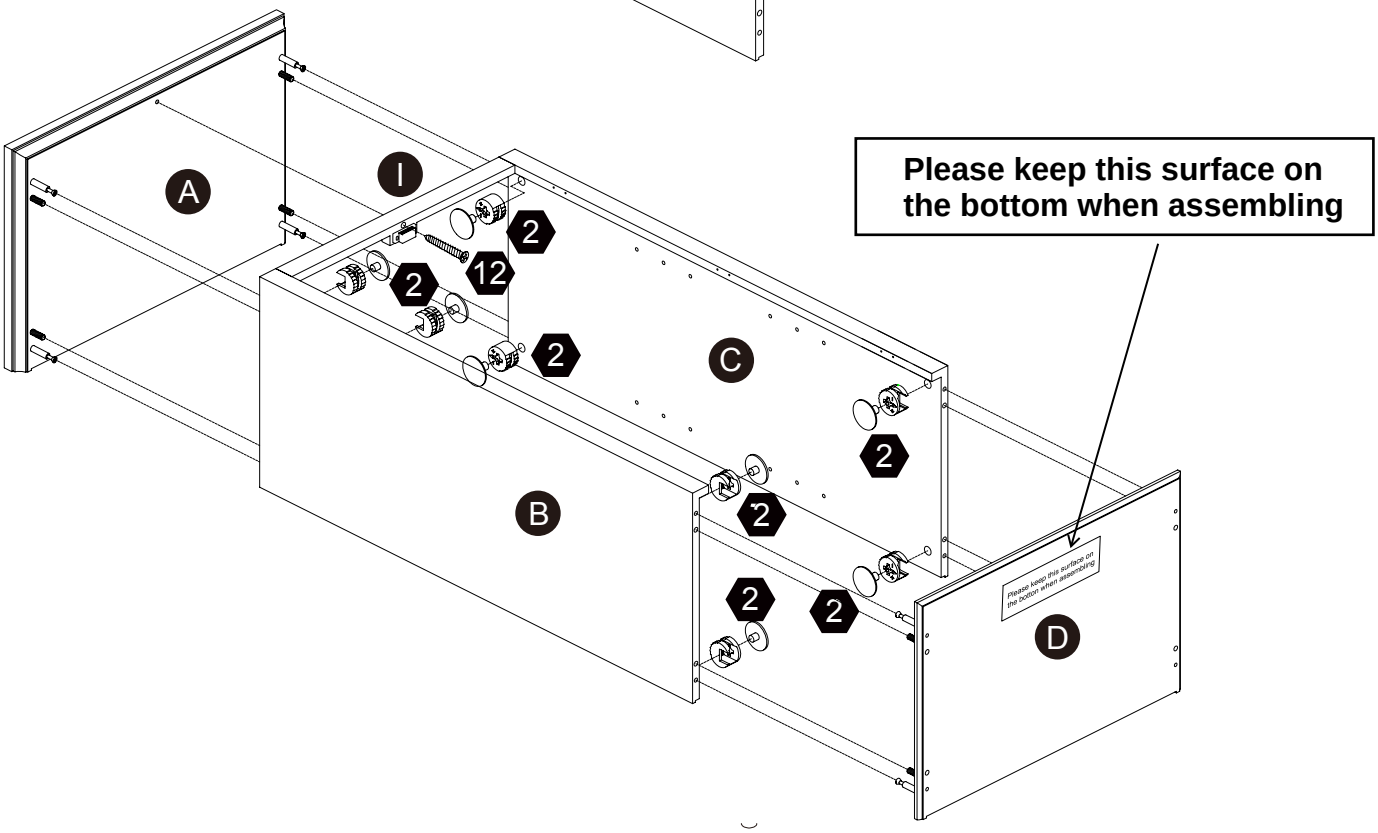

Scan for assembly instructions.

Step 4

1 4 pcs

2 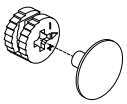 4 pcs

Ø15*9mm

3 4 pcs

Ø6*30mm

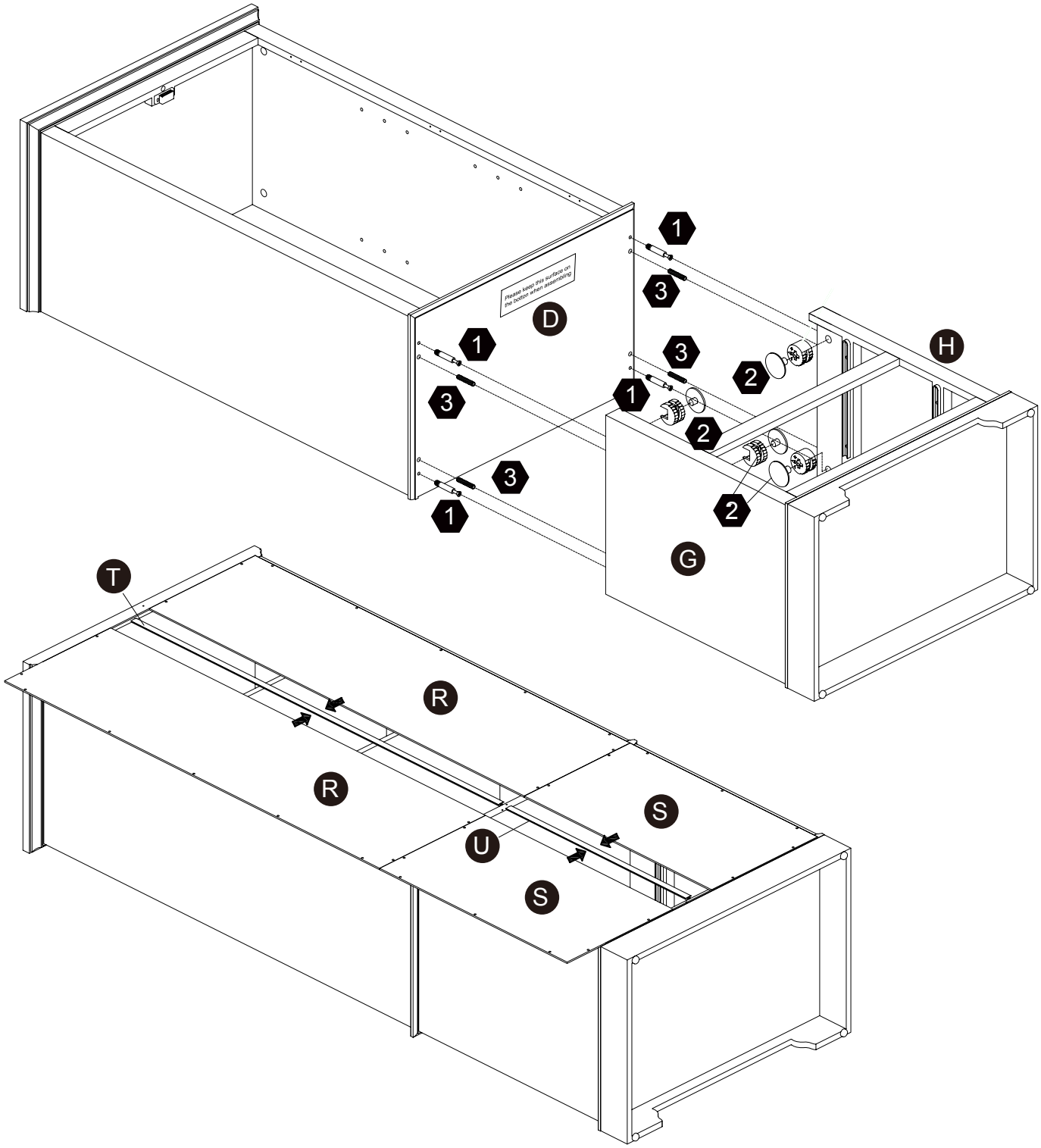

Scan for assembly instructions.

Step 5

4 Ø3*10mm 12 pcs | 7 Ø3*12mm 28 pcs | 9 2 pcs | 10 Ø5/32"*14mm 2 pcs

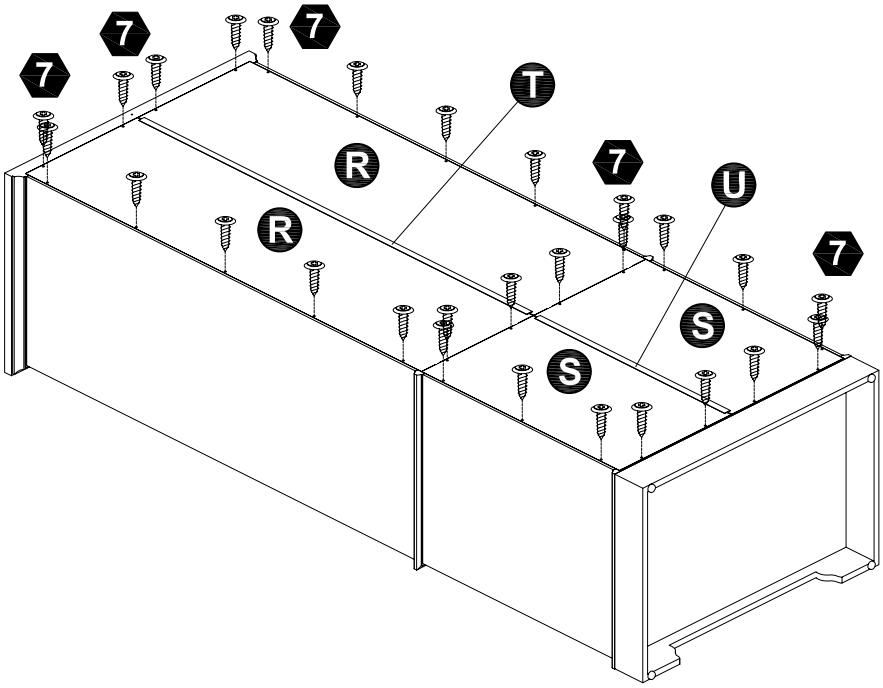

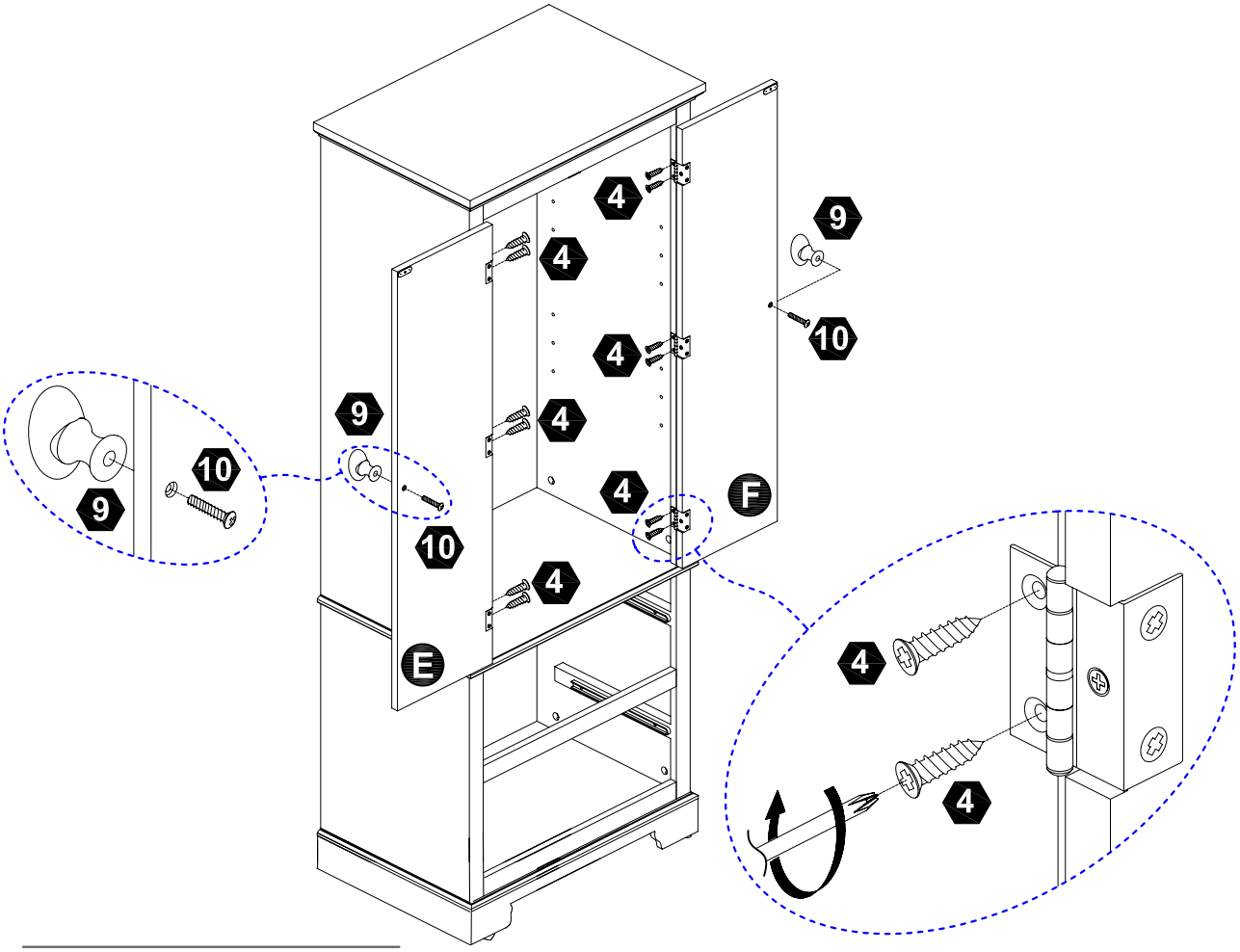

Scan for assembly instructions.

Step 6

5 Ø4*25mm 8 pcs 6 8 pcs

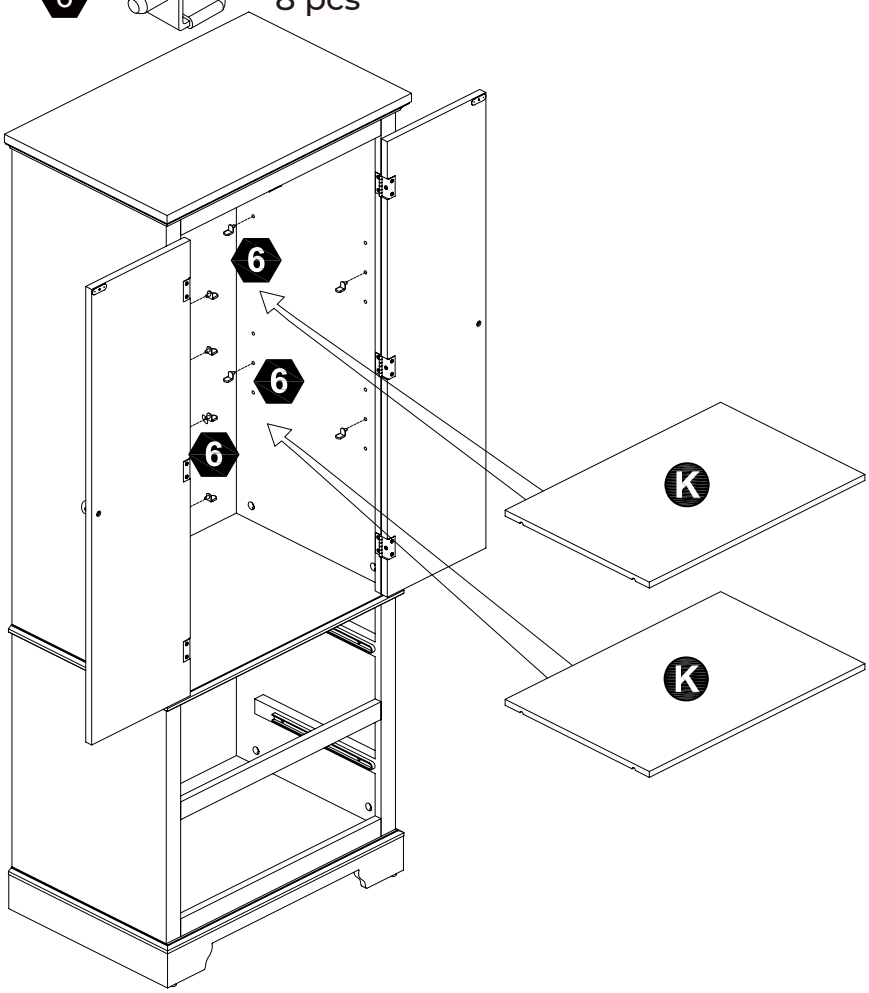

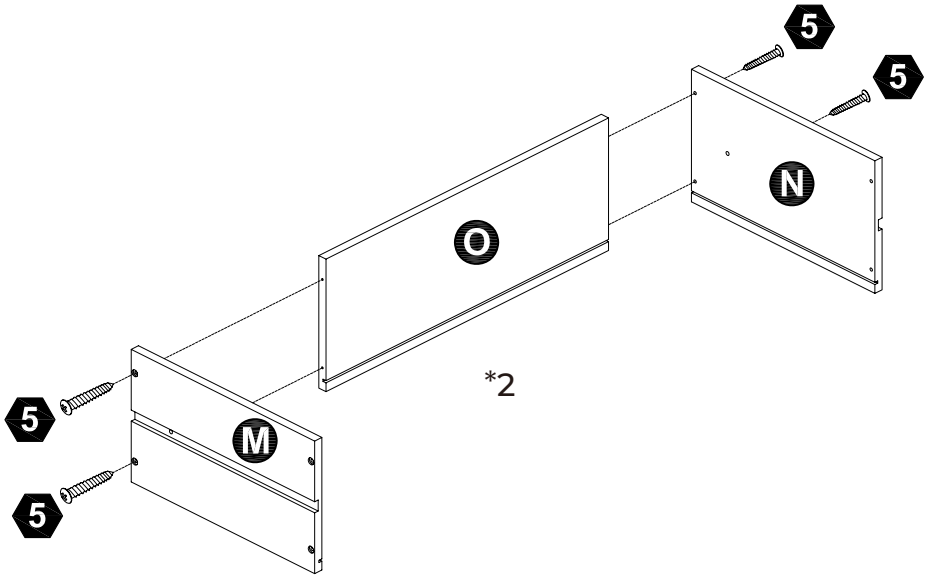

Scan for assembly instructions.

Step 7

5 Ø4*25mm 8 pcs

8 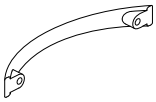 2 pcs

10 Ø5/32"*14mm 4 pcs

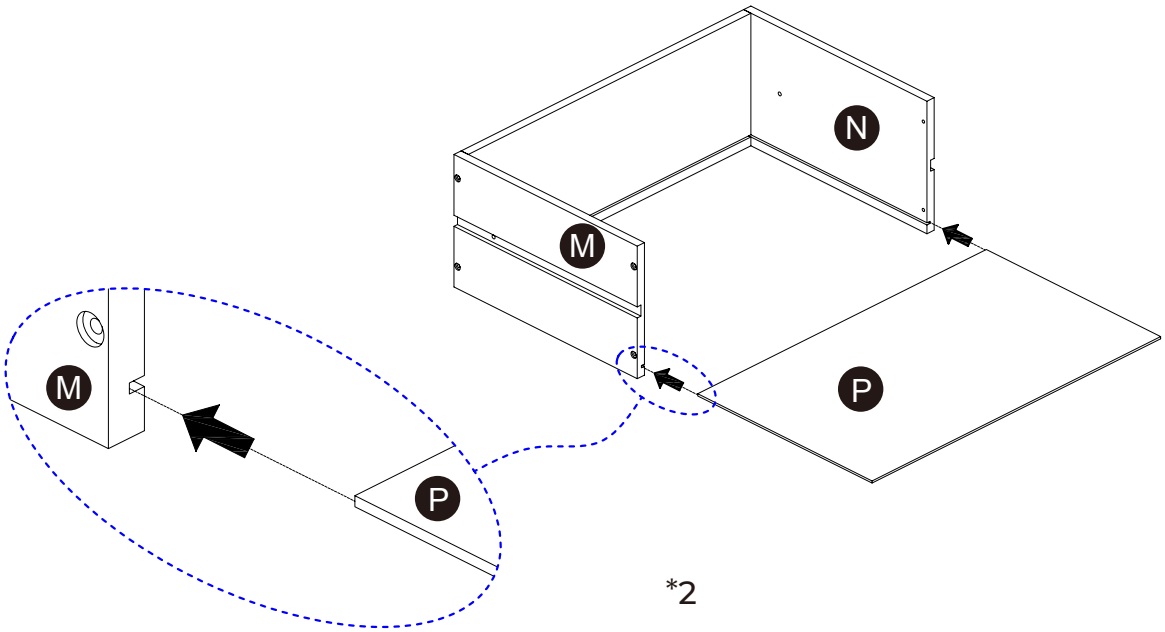

*2

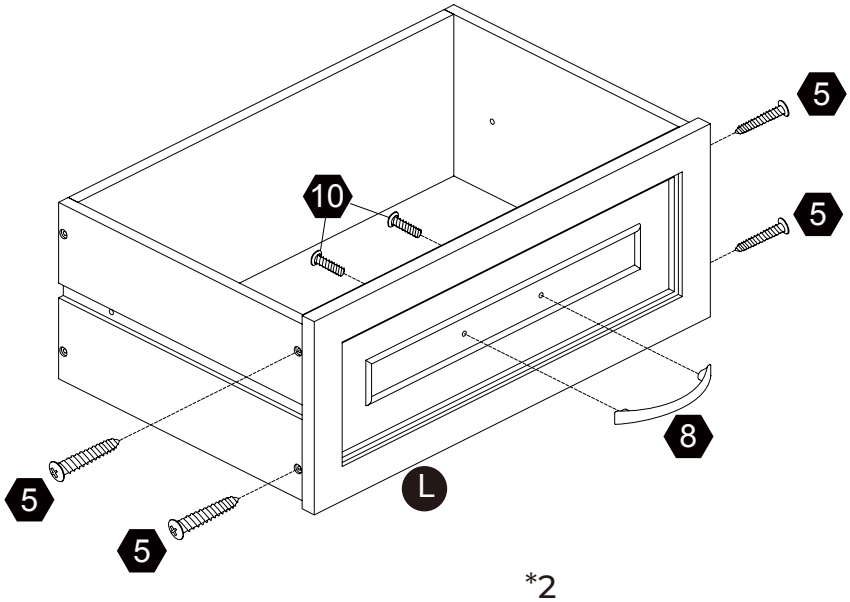

*2

Scan for assembly instructions.

Step 8

11 4 pcs

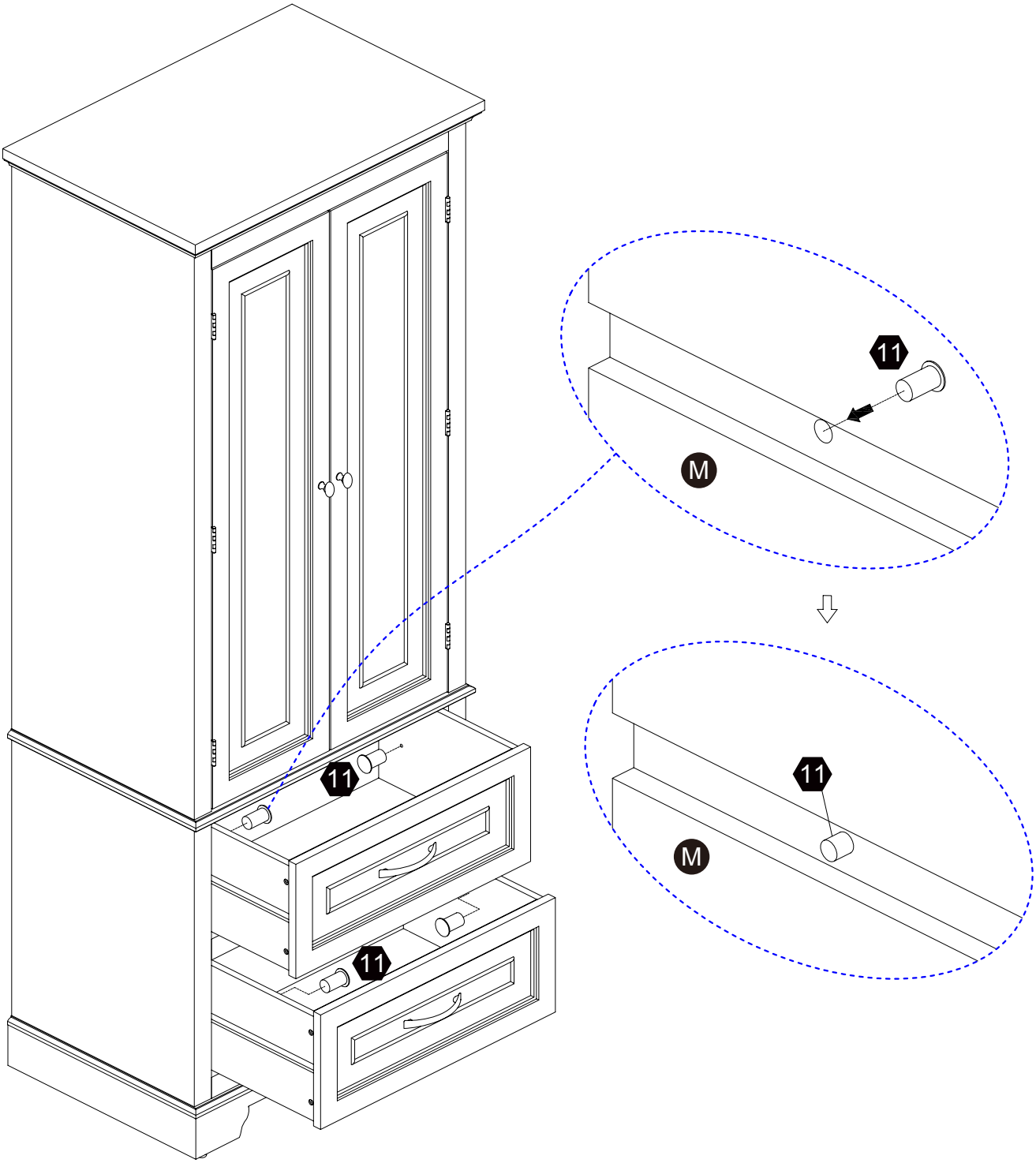

Scan for assembly instructions.

Step 9

16 2 pcs

13 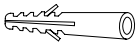 1 pc

14 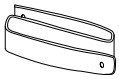 1 pc

15 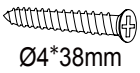 Ø4*38mm 2 pc

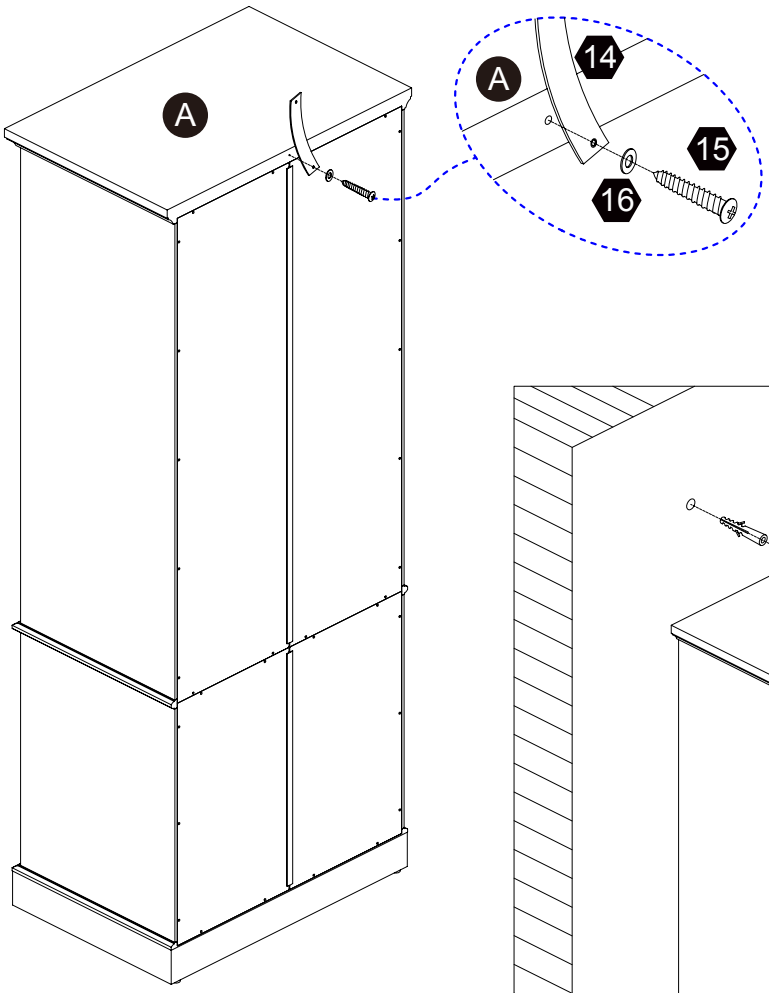

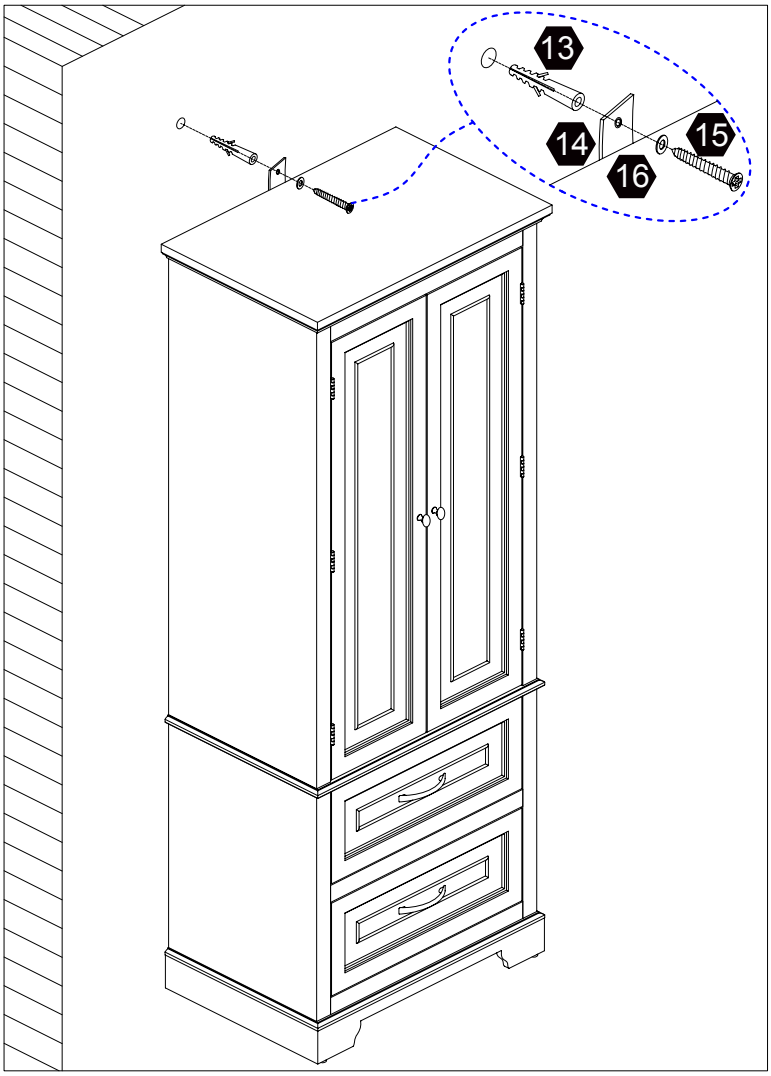

Scan for assembly instructions.