ASSEMBLY INSTRUCTION

Thank you for purchasing this quality product. Be sure to check all packing material carefully for small parts which may have come loose inside the carton during shipment. Separate, identify and count all parts and hardware. Compare with the parts list to be sure all parts are present.

IMPORTANT : PLEASE READ INSTRUCTION BEFORE STARTING THE ASSEMBLY.

"DO NOT TIGHTEN SCREWS UNTIL COMPLETELY ASSEMBLED"

"DO NOT OVERTIGHT ANY HARDWARE"

WARNING : SMALL PARTS AND HARDWARE NOT FOR CHILDREN UNDER 3 YEARS. ADULT ASSEMBLY REQUIRED.

TABLE OF CONTENTS

HARDWARES LIST	PAGE 2 - 3
PARTS LIST	PAGE 4 - 6
PARTS' LOCATION	PAGE 7
ASSEMBLY STEPS	PAGE 8 - 25
ASSEMBLY COMPLETED	PAGE 26
ANTI-TIPPING INSTALLMENT INSTRUCTIONS	PAGE 27
PAY ATTENTION ITEMS	PAGE 28

ASSEMBLY TOOLS REQUIRED

1. Screwdriver (not provide)

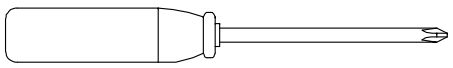

2. Hammer (not provide)

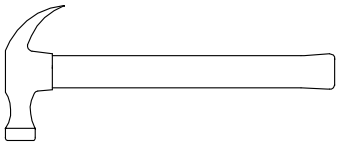

Skip the power trip this time.

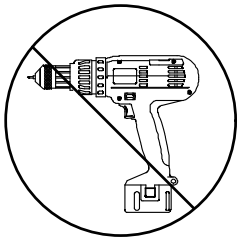

HARDWARES LIST

ITEM	DESCRIPTION	DRAWING	QTY
A	MINIFIX CAM LOCK		76 PCS
B	MINIFIX CAM BOLT		76 PCS
C	WOOD DOWEL (M8 x 25MM)		34 PCS
D	WOOD DOWEL (M6 x 25MM)	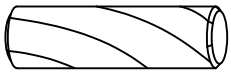	48 PCS
E	JCBC SCREW (M6 x 16MM)	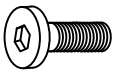	16 PCS
I	CSK C/B SCREW (M4 x 16MM)		12 PCS
L	6/8" NAIL		24 PCS

MORE HARDWARES DETAIL IN NEXT PAGE...

HARDWARES LIST

ITEM	DESCRIPTION	DRAWING	QTY
M	HANDLE	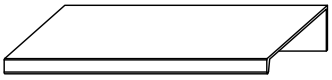	6 PCS
N	M4 ALLEN KEY (65MM)		1 PC
O	LEFT DRAWER SLIDE	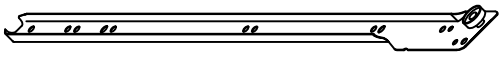	6 PCS
P	RIGHT DRAWER SLIDE	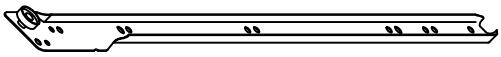	6 PCS
Q	CSK SCREW M3 x 10mm		48 PCS
R	PLASTIC STRIP (H SHAPE)		1 PC
S	METAL LEG	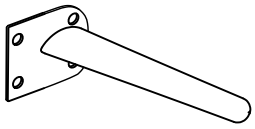	4 PCS

PARTS LIST (BOX 1)

ITEM	DESCRIPTION	DRAWING	QTY
D1	TOP PANEL	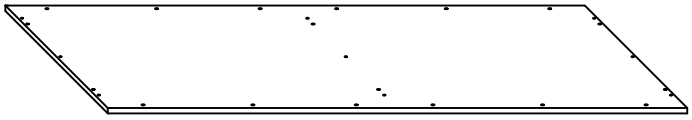	1 PC
D5	FRONT TOP SUPPORT RAIL	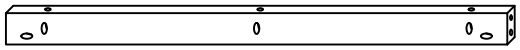	2 PCS
D6	FRONT CENTRE SUPPORT RAIL	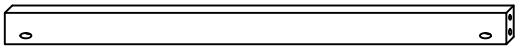	2 PCS
D7	BACK TOP SUPPORT RAIL (L)	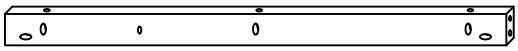	1 PC
D8	BACK TOP SUPPORT RAIL (R)	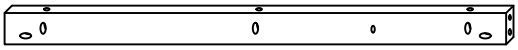	1 PC
D9	BACK CENTRE SUPPORT RAIL (L)	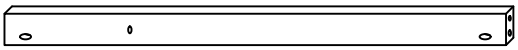	1 PC
D10	BACK CENTRE SUPPORT RAIL (R)	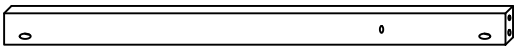	1 PC
D23	BOTTOM PANEL		1 PC
D12A	UPPER BACK PANEL		1 PC

MORE PARTS DETAIL IN NEXT PAGE...

PARTS LIST (BOX 1)

ITEM	DESCRIPTION	DRAWING	QTY
D12B	LOWER BACK PANEL	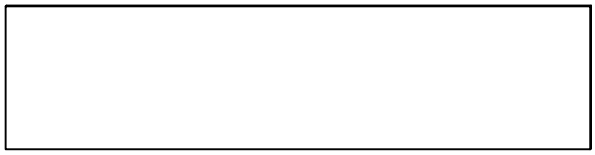	1 PC
D13	DRAWER HEAD	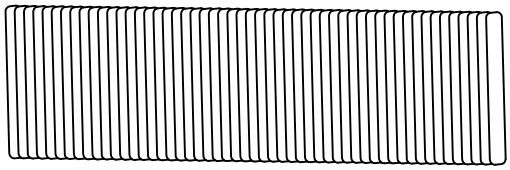	6 PCS

PARTS LIST (BOX 2)

ITEM	DESCRIPTION	DRAWING	QTY
D2	LEFT PANEL		1 PC
D3	RIGHT PANEL		1 PC
D4	CENTRE PANEL		1 PC
D14	DRAWER BACK PANEL	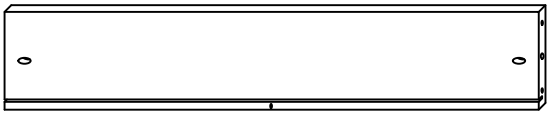	6 PCS
D15	DRAWER BOTTOM PANEL		6 PCS
D24	CENTRE SUPPORT LEG	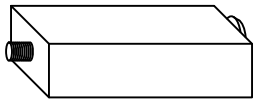	1 PC

MORE PARTS DETAIL IN NEXT PAGE...

PARTS LIST (BOX 2)

ITEM	DESCRIPTION	DRAWING	QTY
19	DRAWER LEFT PANEL	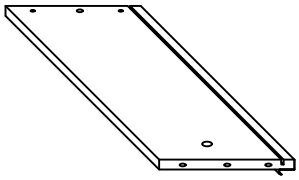	6 PCS
20	DRAWER RIGHT PANEL	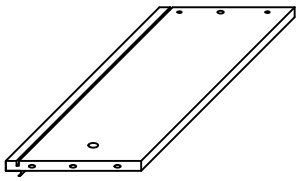	6 PCS
21	DRAWER BOTTOM SUPPORT RAIL	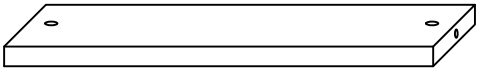	6 PCS

PARTS ' LOCATION

DRESSER x 1 PC

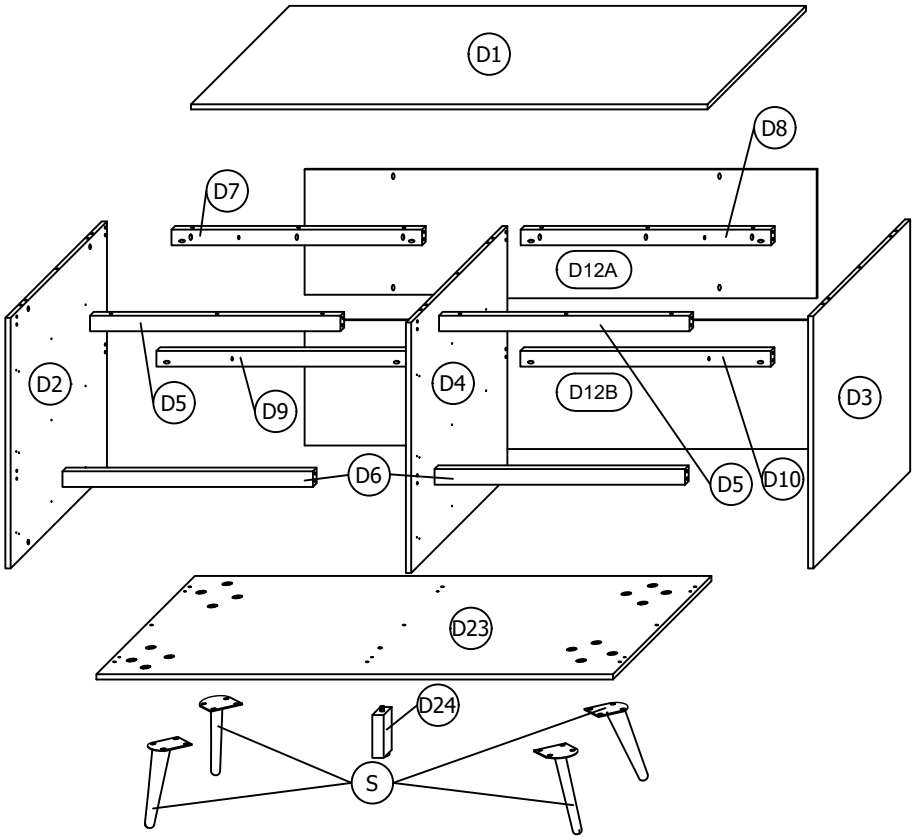

DRAWER x 6 PCS

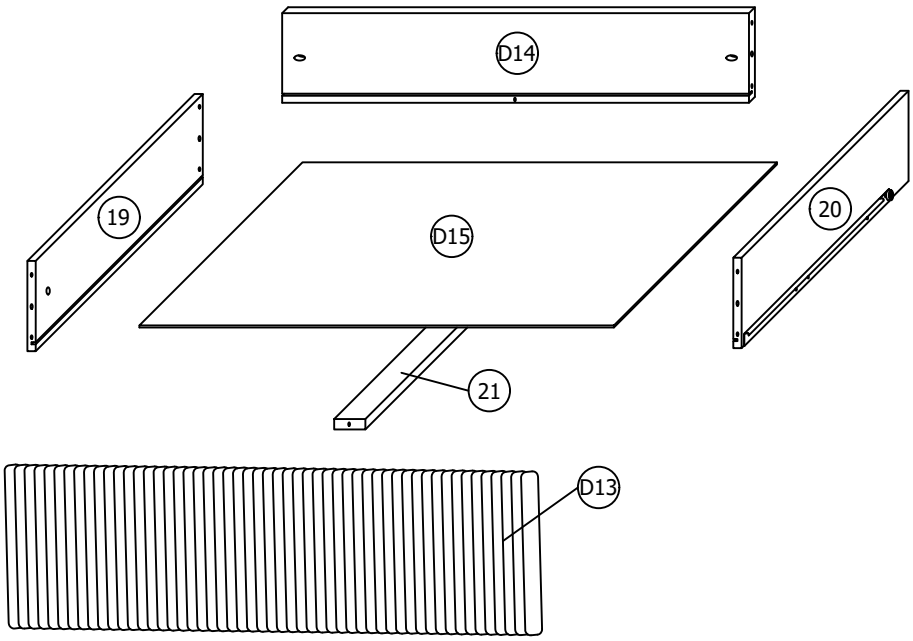

ASSEMBLY STEPS

STEP 1

Fix 3 pieces (O) to the (D2) by using 12 pieces (Q). Then insert 4 pieces (A),(B) and 3 pieces (C) as shown.

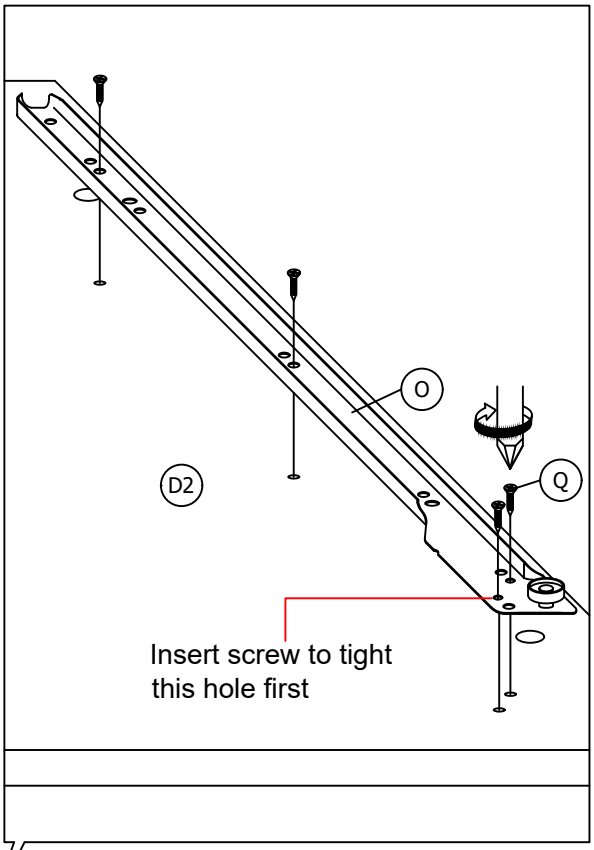

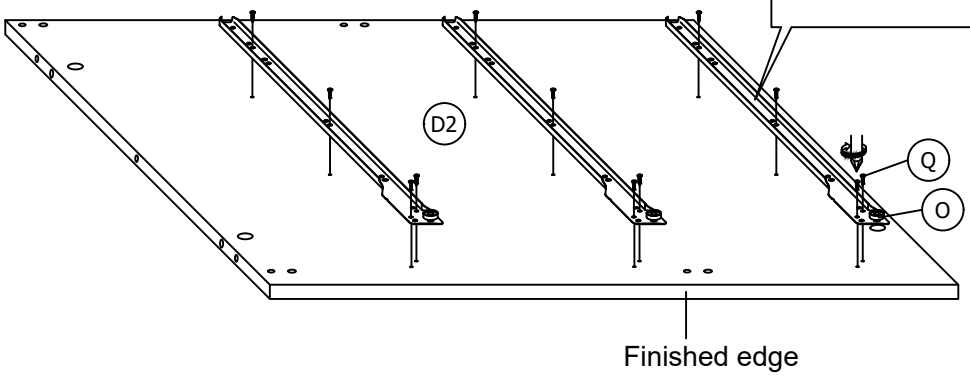

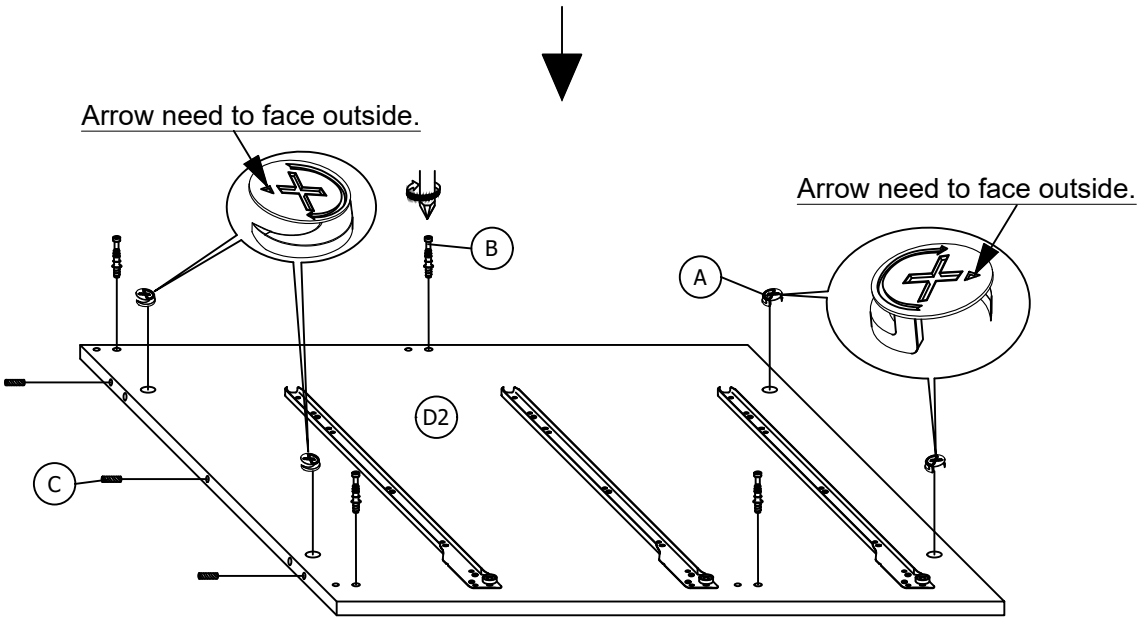

Assembled looks

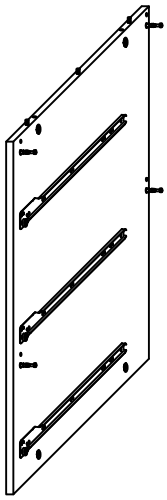

STEP 2

Fix 3 pieces (P) to the (D3) by using 12 pieces (Q). Then insert 4 pieces (A),(B) and 3 pieces (C) as shown.

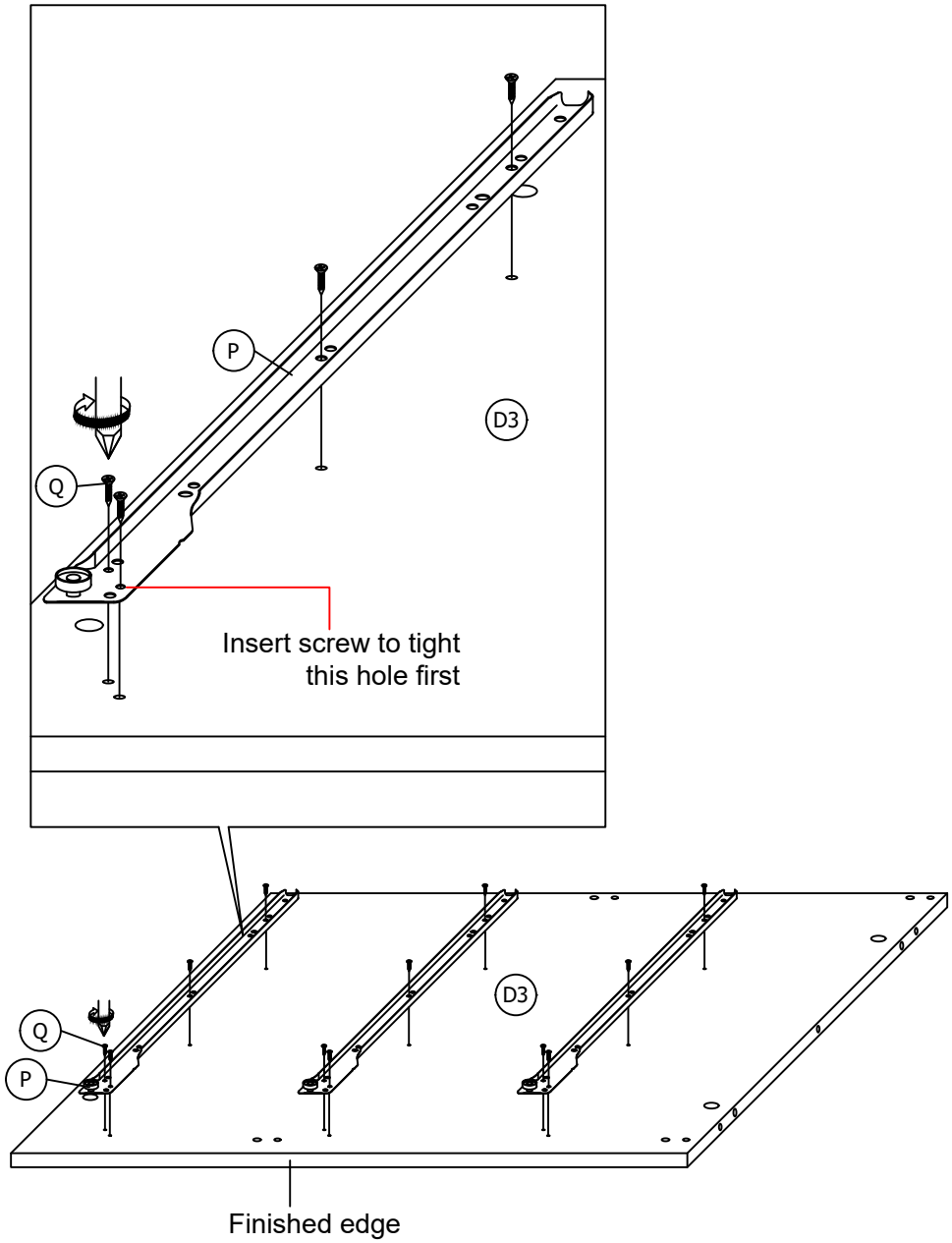

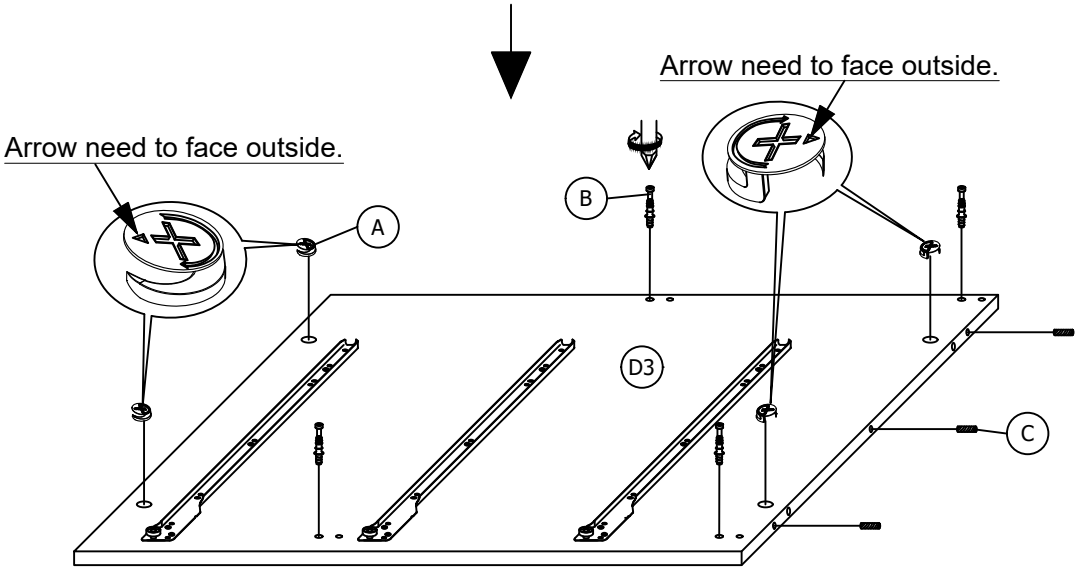

Assembled looks

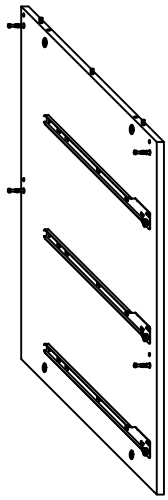

STEP 3

Fix the remaining 3 pieces (O) to the right side of (D4) by using 12 pieces (Q). Then insert 3 pieces (C) and 4 pieces (B) as shown.

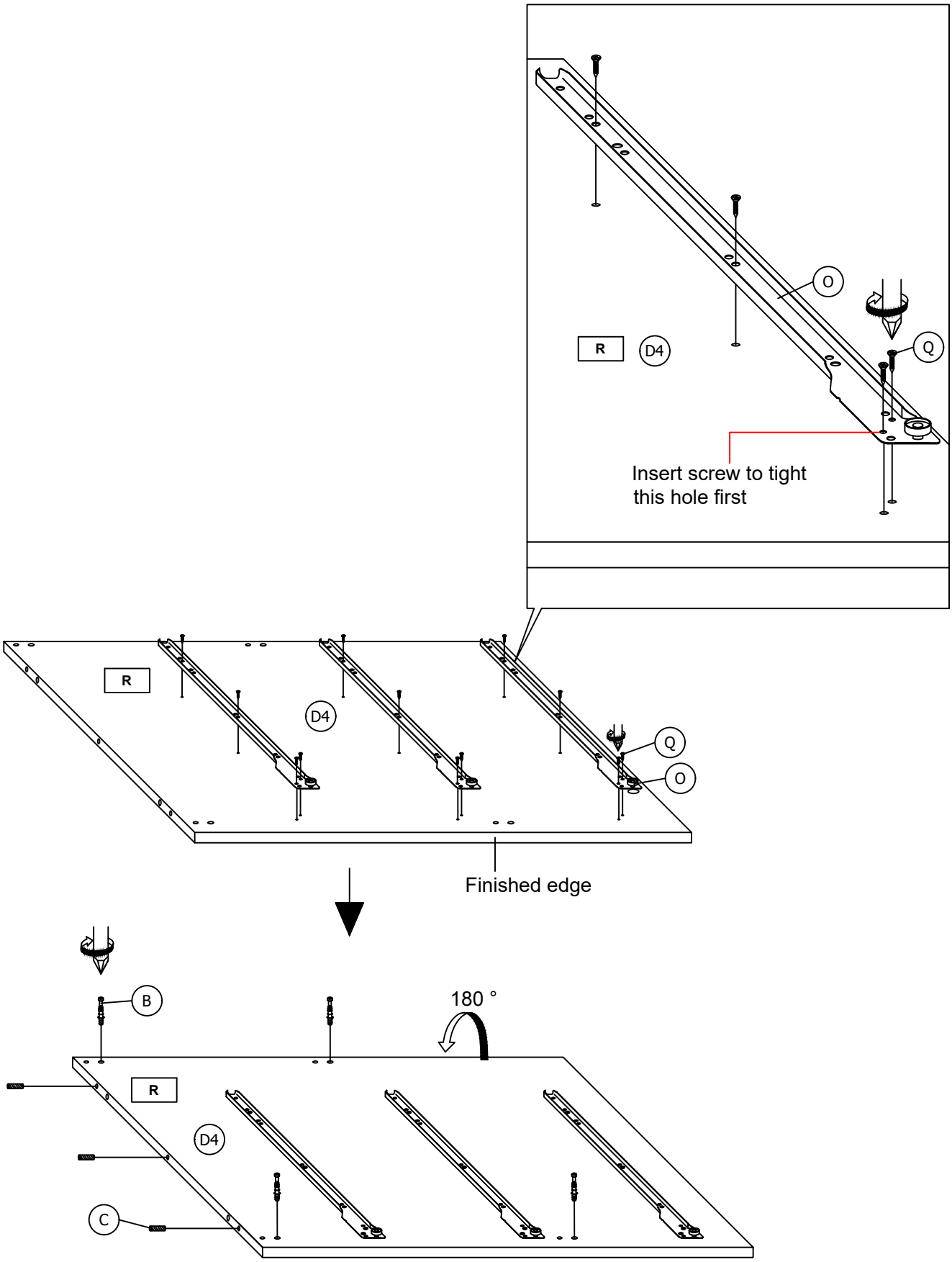

STEP 4

Fix the remaining 3 pieces (P) to the left side of (D4) by using 12 pieces (Q). Then insert 4 pieces (A),(B) as shown.

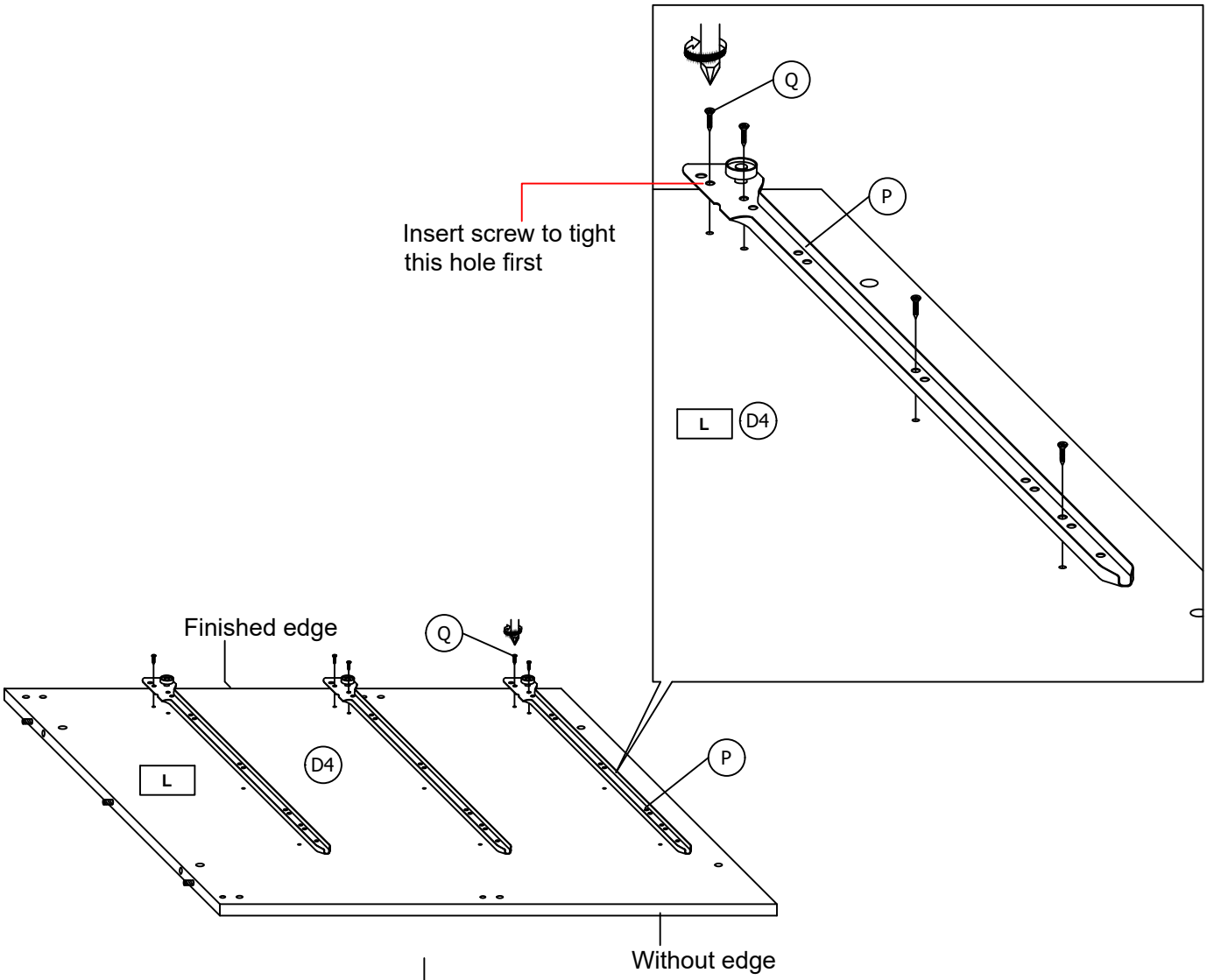

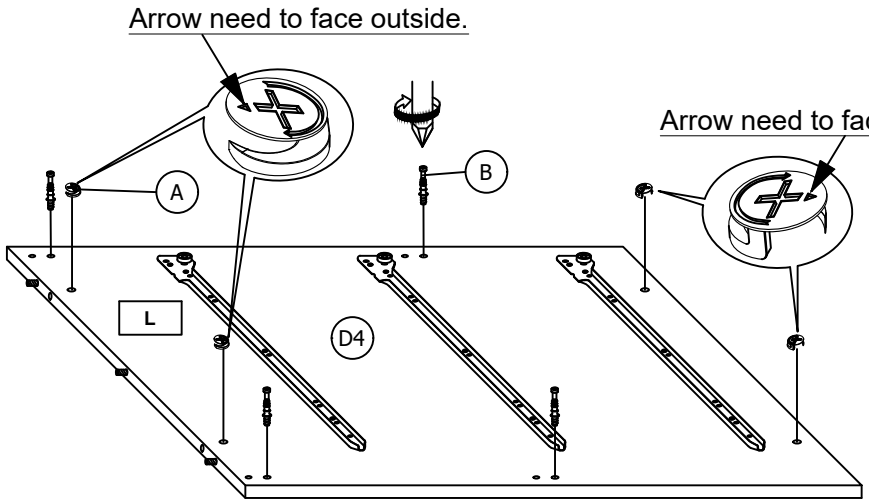

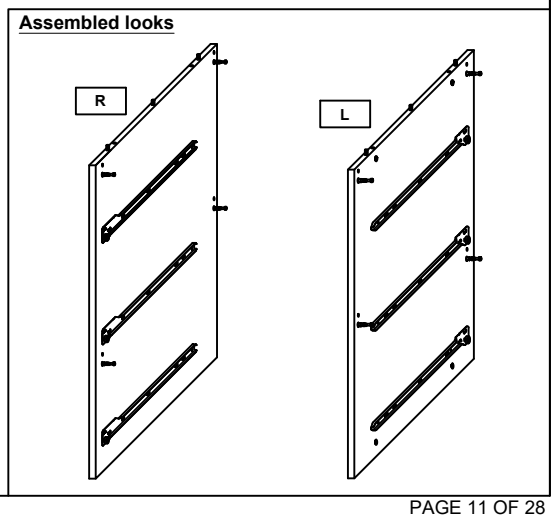

STEP 5

Insert 5 pieces (A) and 2 pieces (C) to (D5) as shown.This step needs to be **done twice**.

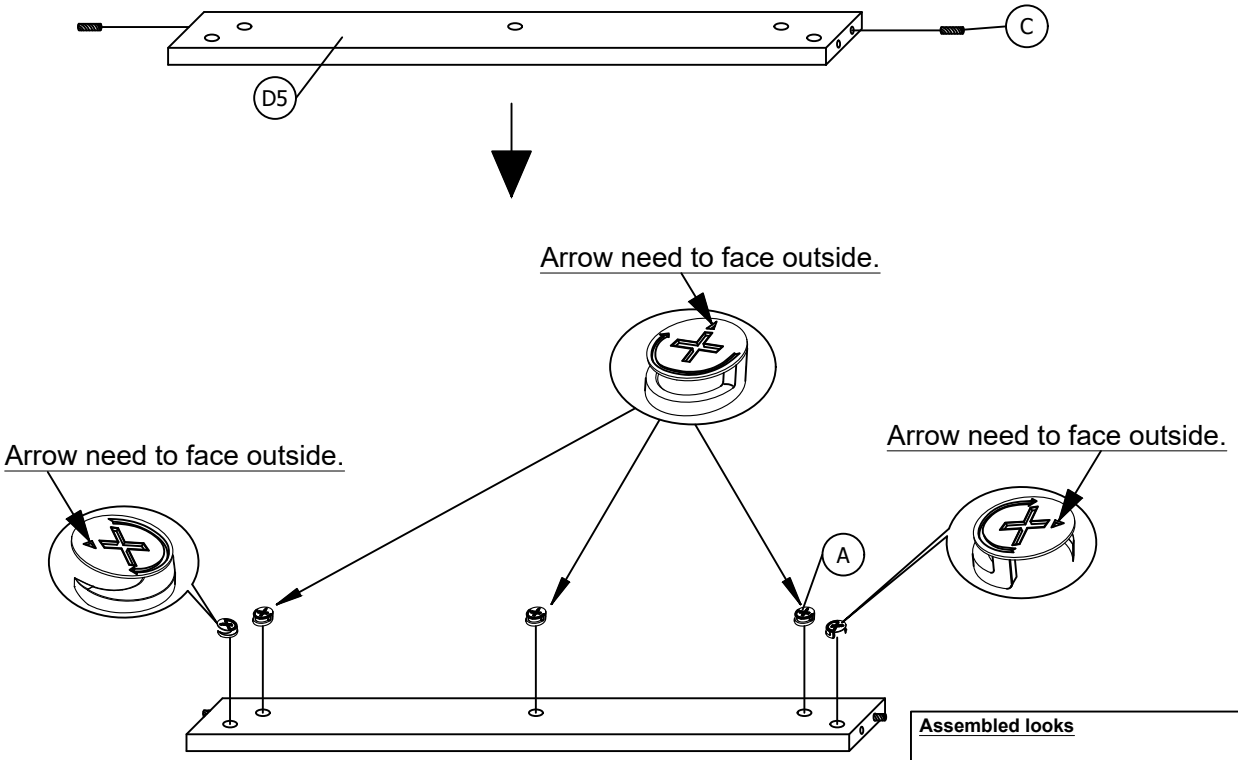

Assembled looks

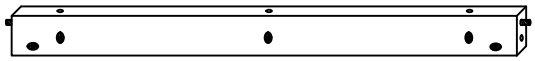

STEP 6

Insert 2 pieces (A) and (C) to (D6) as shown.This step needs to be **done twice**.

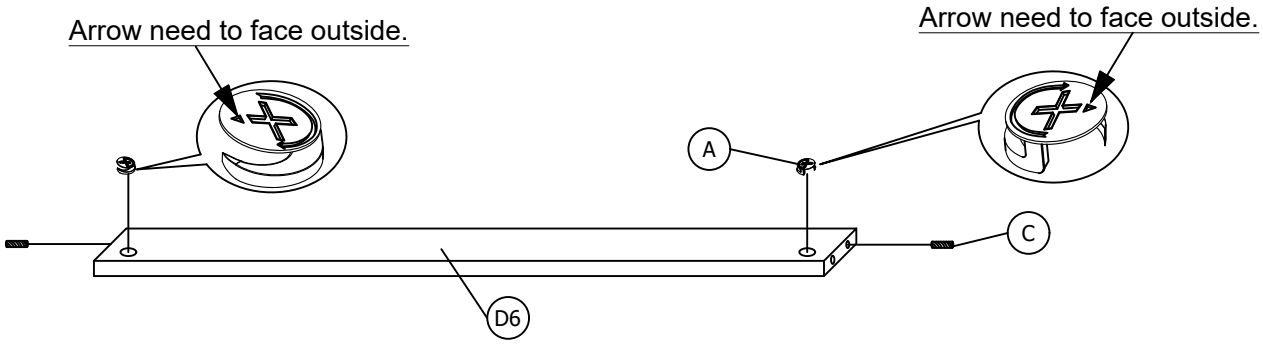

Assembled looks

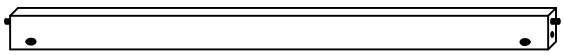

STEP 7

Insert 5 pieces (A) and 2 pieces (C) to (D7) as shown.

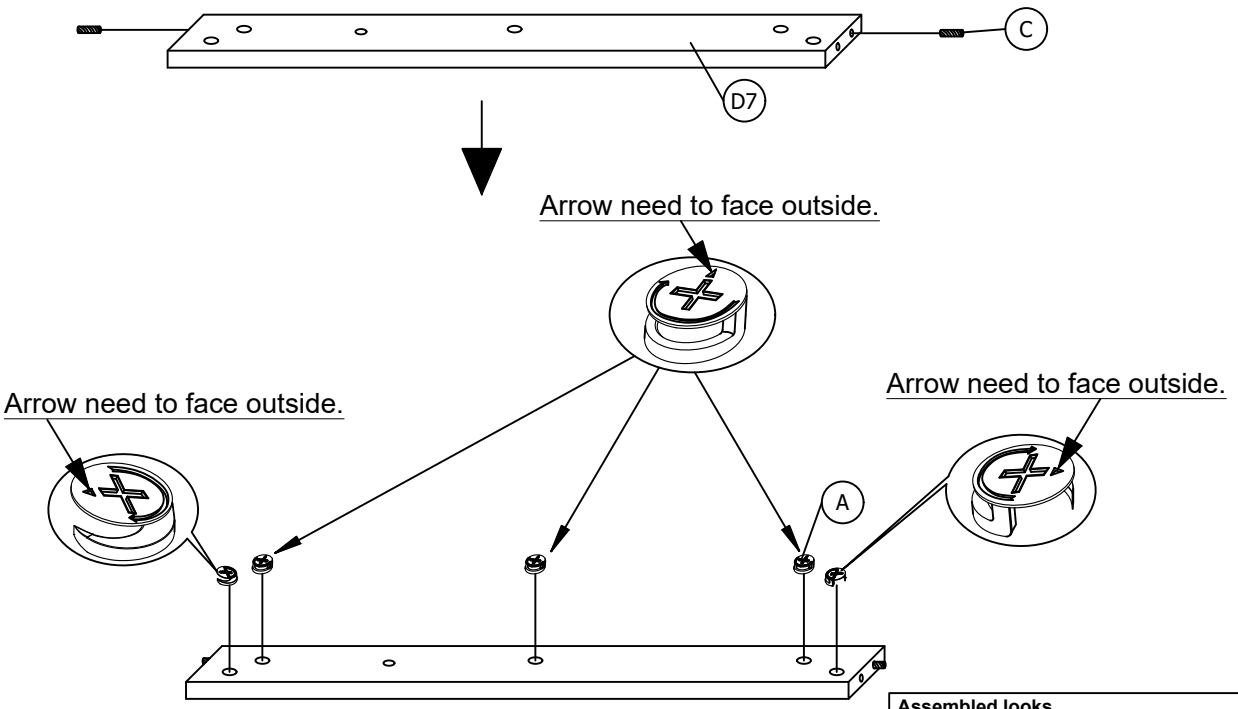

Assembled looks

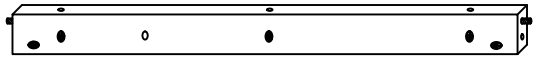

STEP 8

Insert 5 pieces (A) and 2 pieces (C) to (D8) as shown.

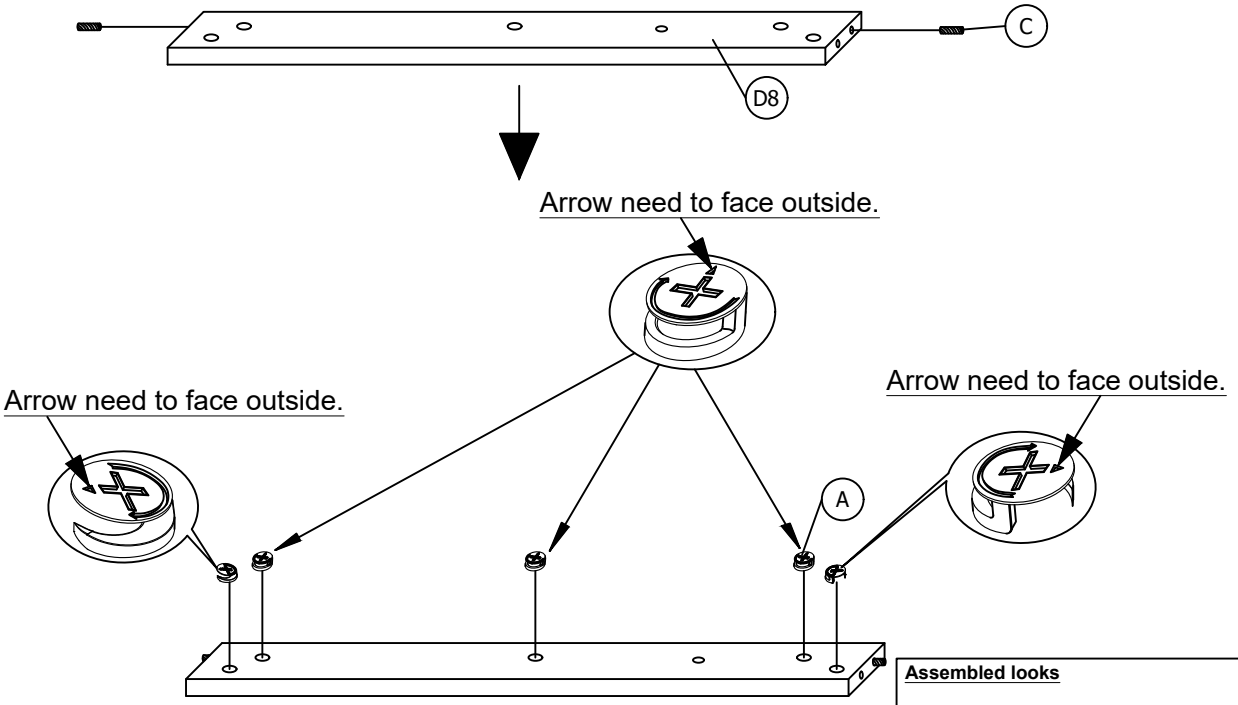

Assembled looks

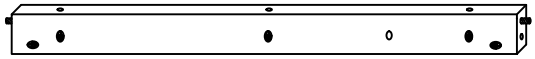

STEP 9

Insert 2 pieces (A) and (C) to (D9) as shown.

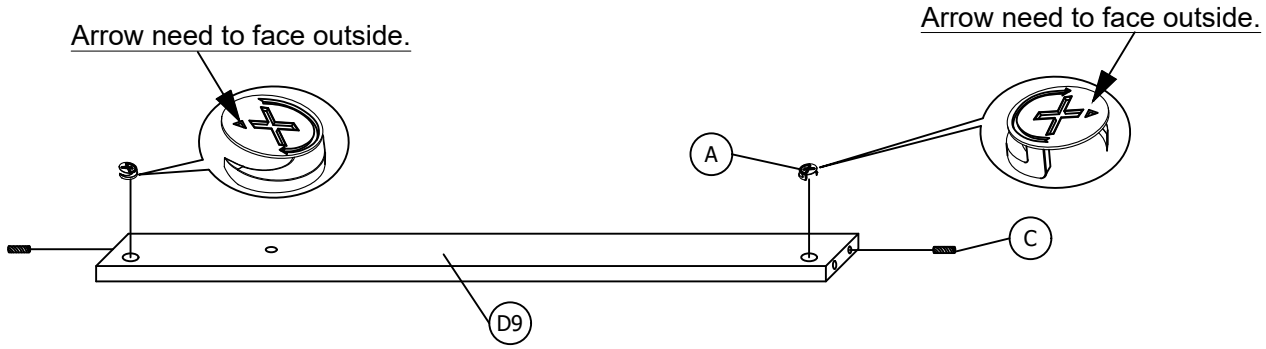

Assembled looks

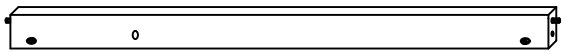

STEP 10

Insert 2 pieces (A) and (C) to (D10) as shown.

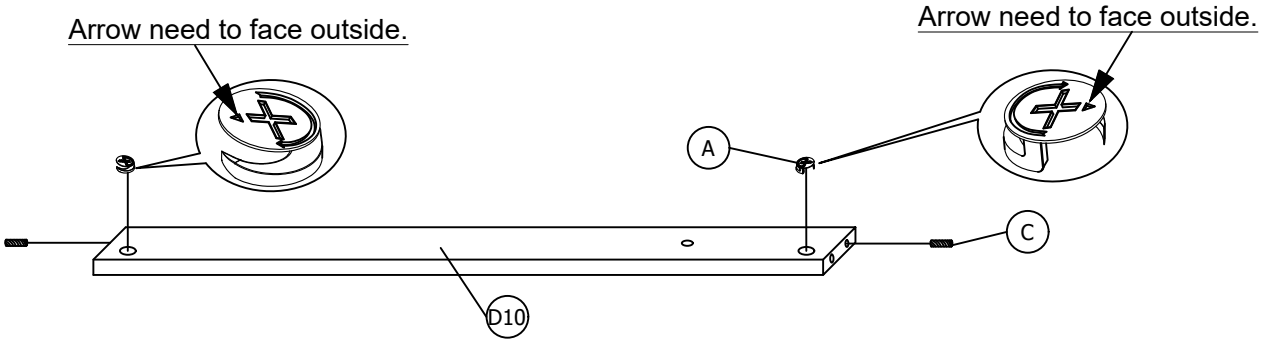

Assembled looks

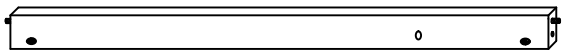

STEP 11

Insert 18 pieces (B) to the (D1) as shown.

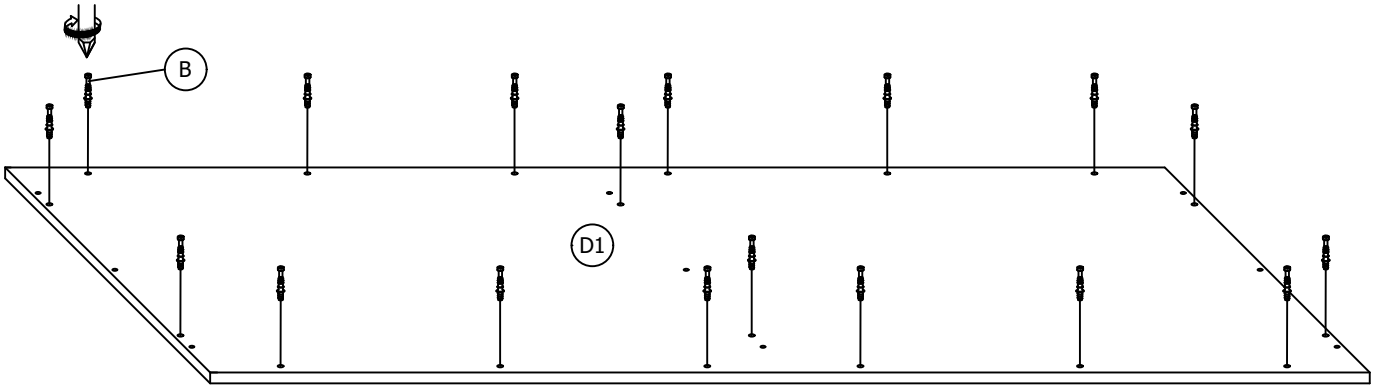

Assembled looks

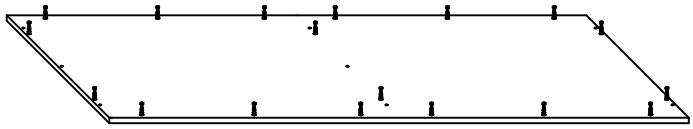

STEP 12

Insert 6 pieces (B) and 9 pieces (C) to the (D23) as shown.

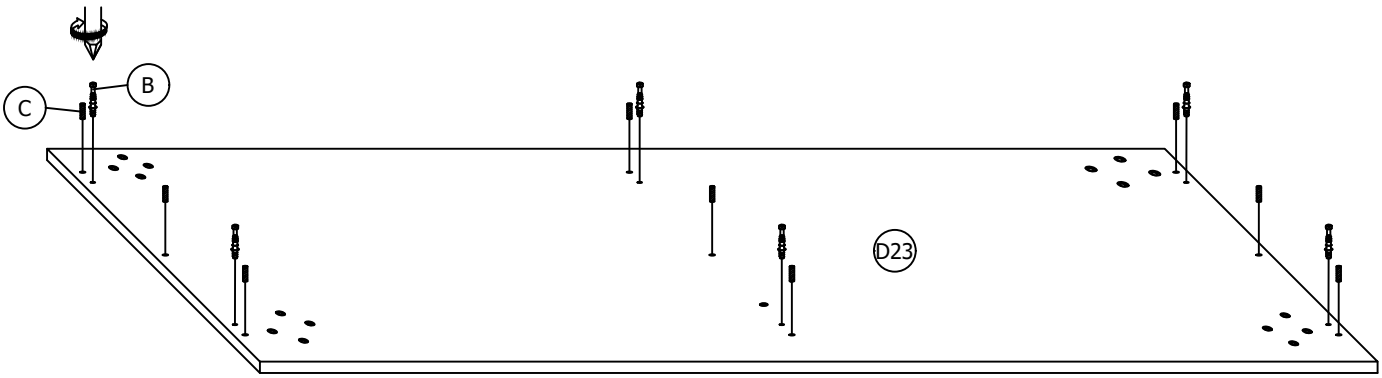

Assembled looks

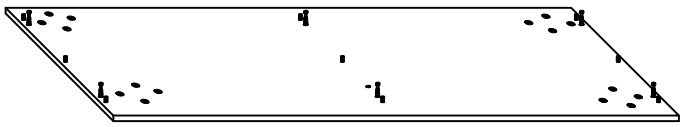

STEP 13

Combine (D5),(D6) and the (D7),(D9) to the (D2) then tighten the 4 pieces (A)-(pre insert in step 5,6,7 and 9) as shown.

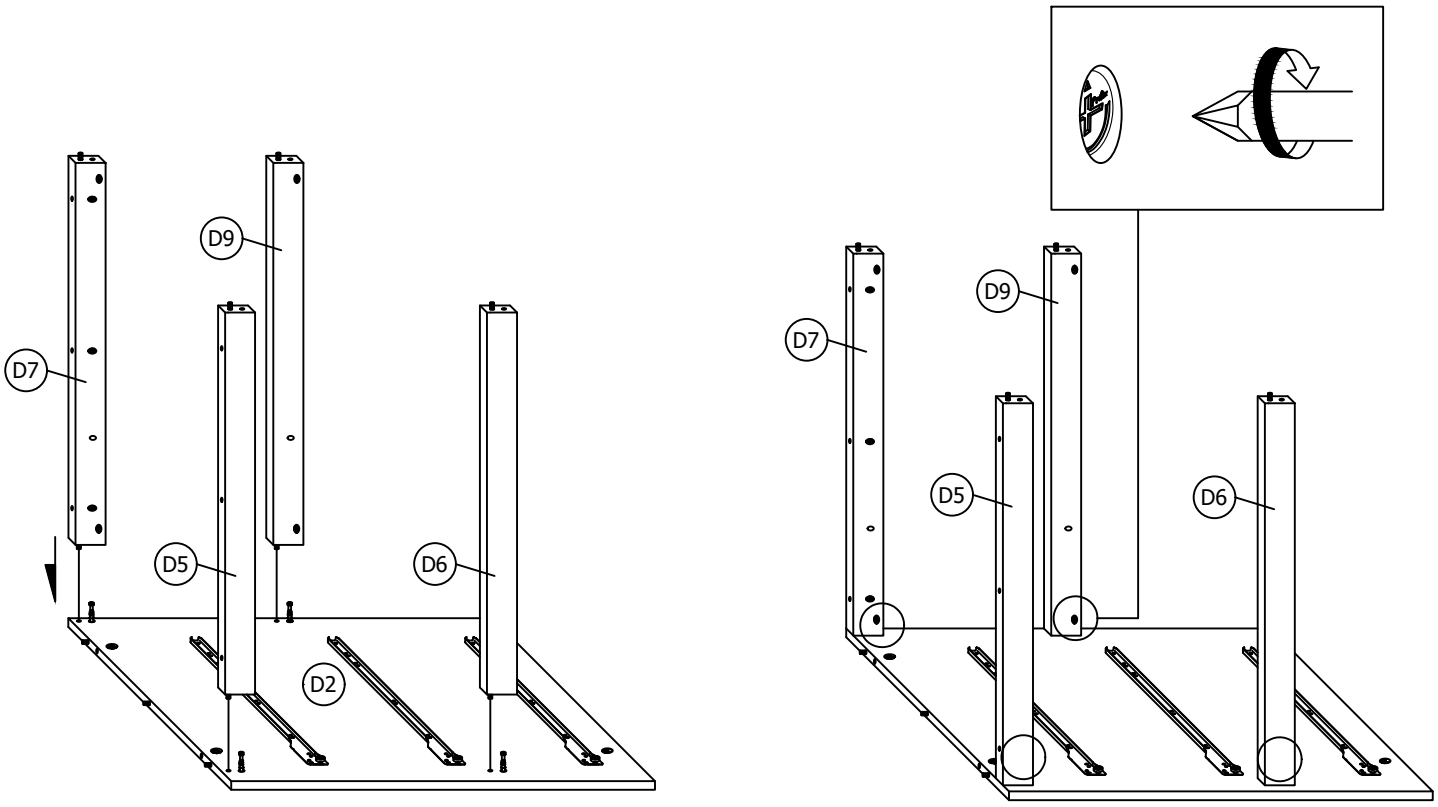

STEP 14

Combine the (D4) to the (D5),(D6),(D7) and (D9) then tighten the another 4 pieces (A)-(pre insert in step 5,6,7 and 9) as shown.

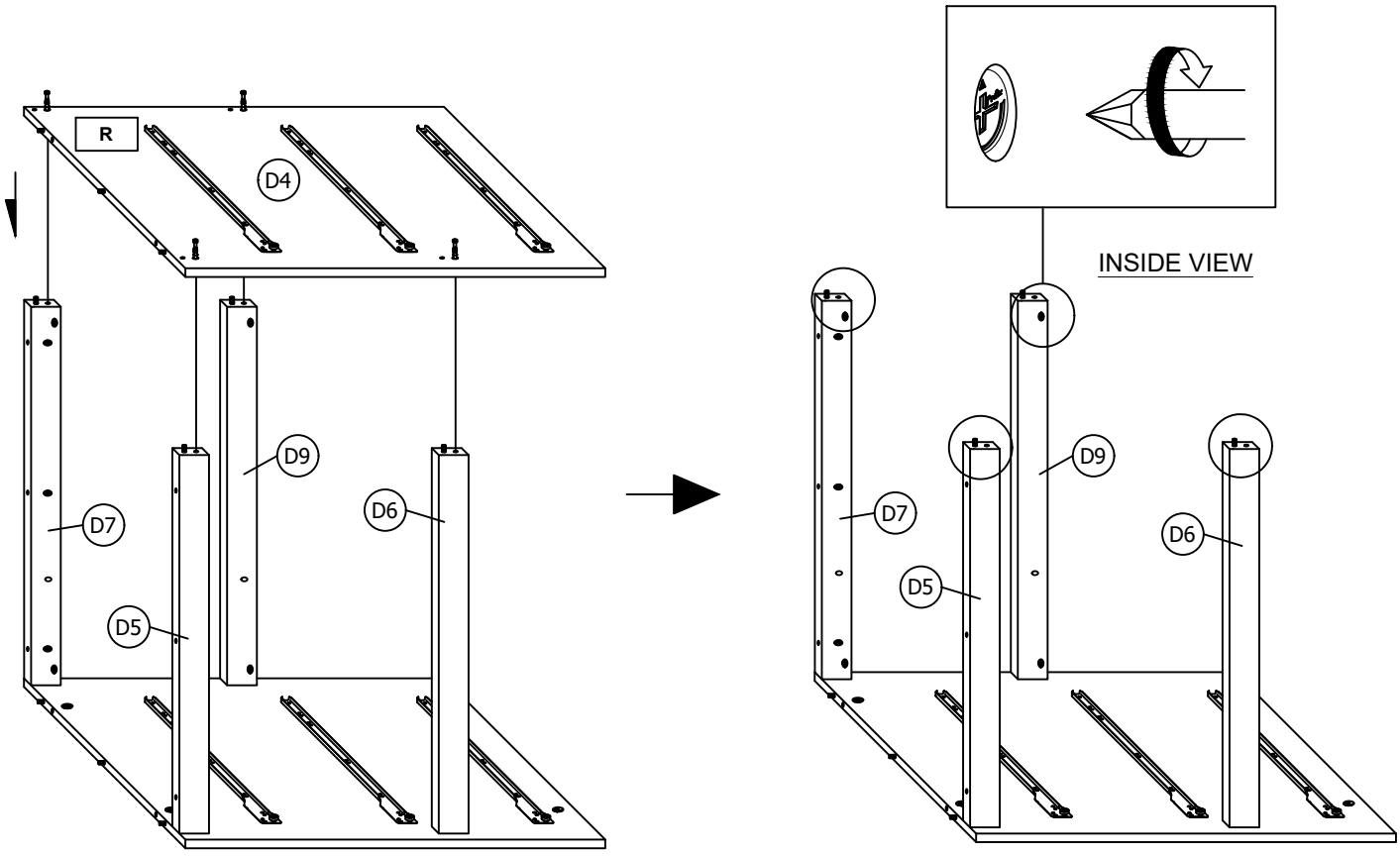

STEP 15

Combine the remaining 1 piece (D5),(D6) and the (D8),(D10) to the (D4) then tighten the 4 pieces (A)-(pre insert in step 5,6,8 and 10) as shown.

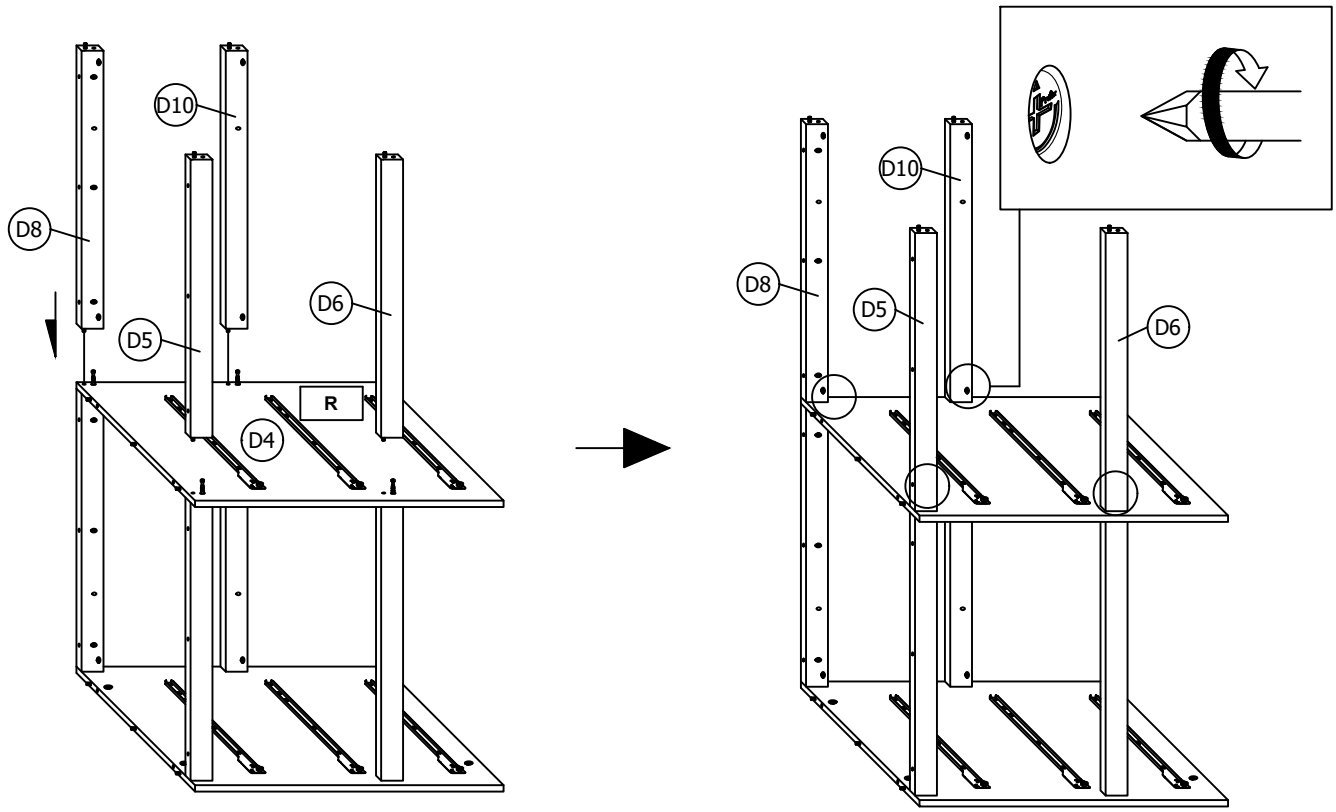

STEP 16

Combine the (D3) to the (D5),(D6),(D8) and (D10) then tighten the another 4 pieces (A)-(pre insert in step 5,6,8 and 10) as shown.

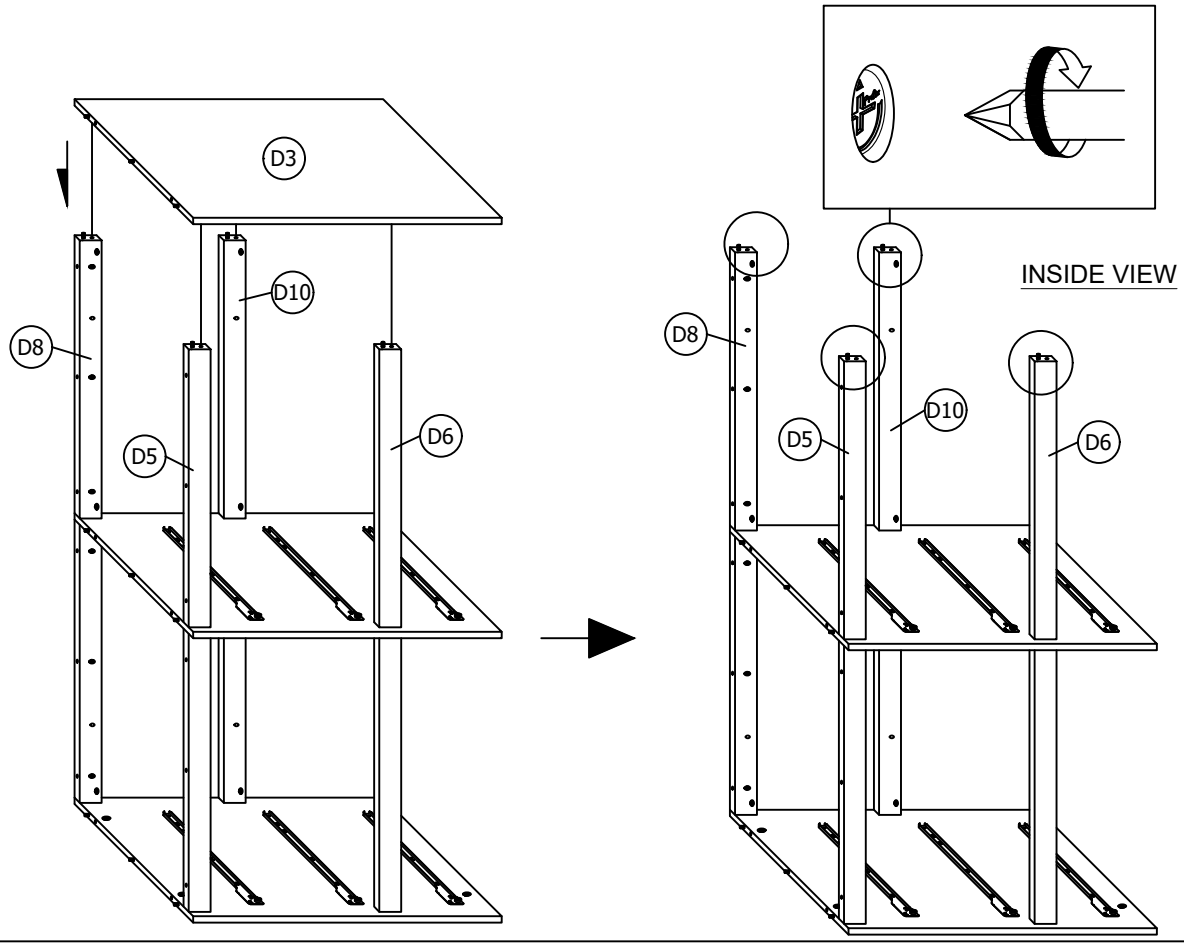

STEP 17

Combine the (D23) to the (D2),(D3) and (D4) then tighten the 6 pieces (A)-(pre insert in step 1,2 and 4) as shown.

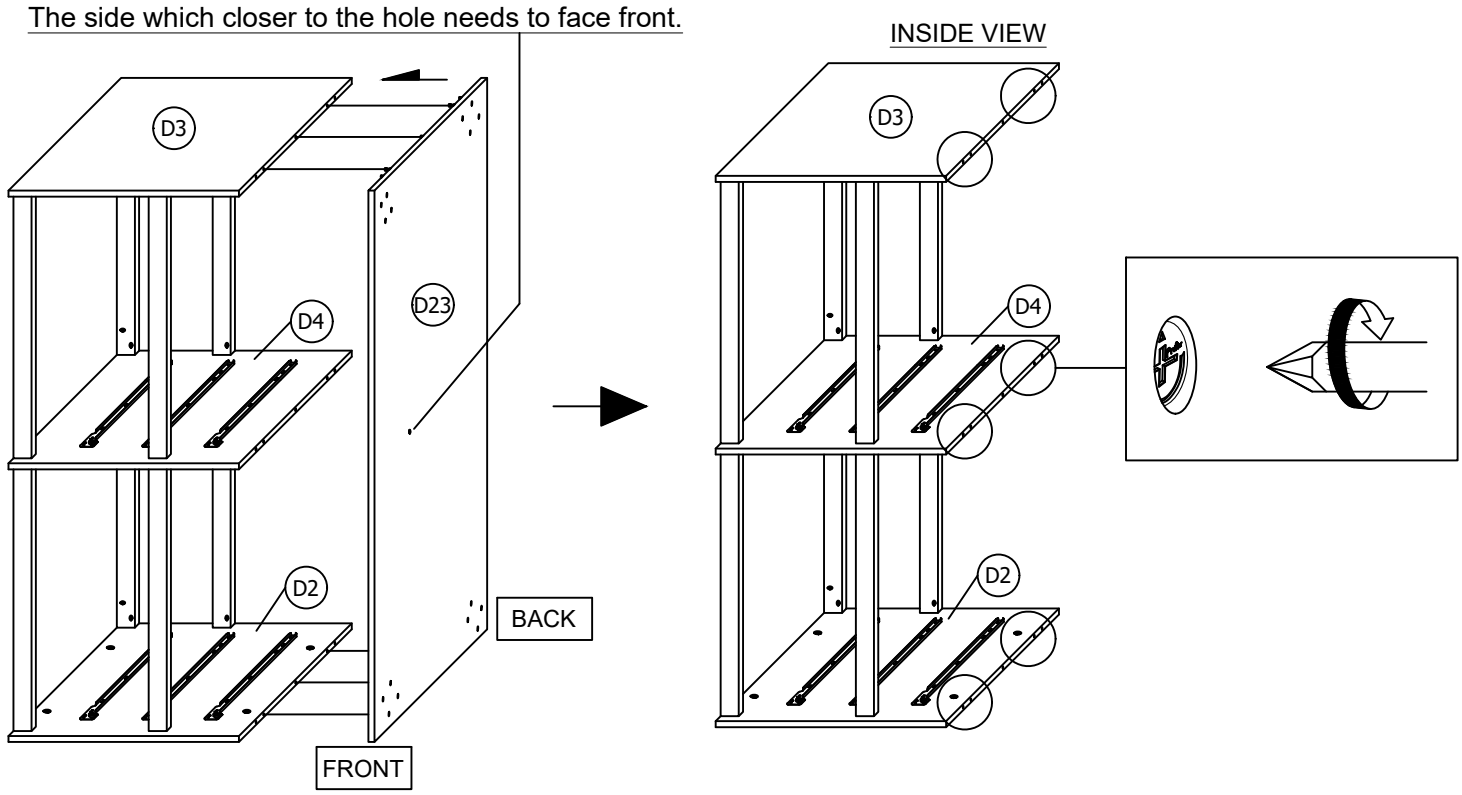

STEP 18

Turn (D24) clockwise to combine to the (D23) . Then insert the 16 pieces (E),to combine the (S) to the (D23) as shown.

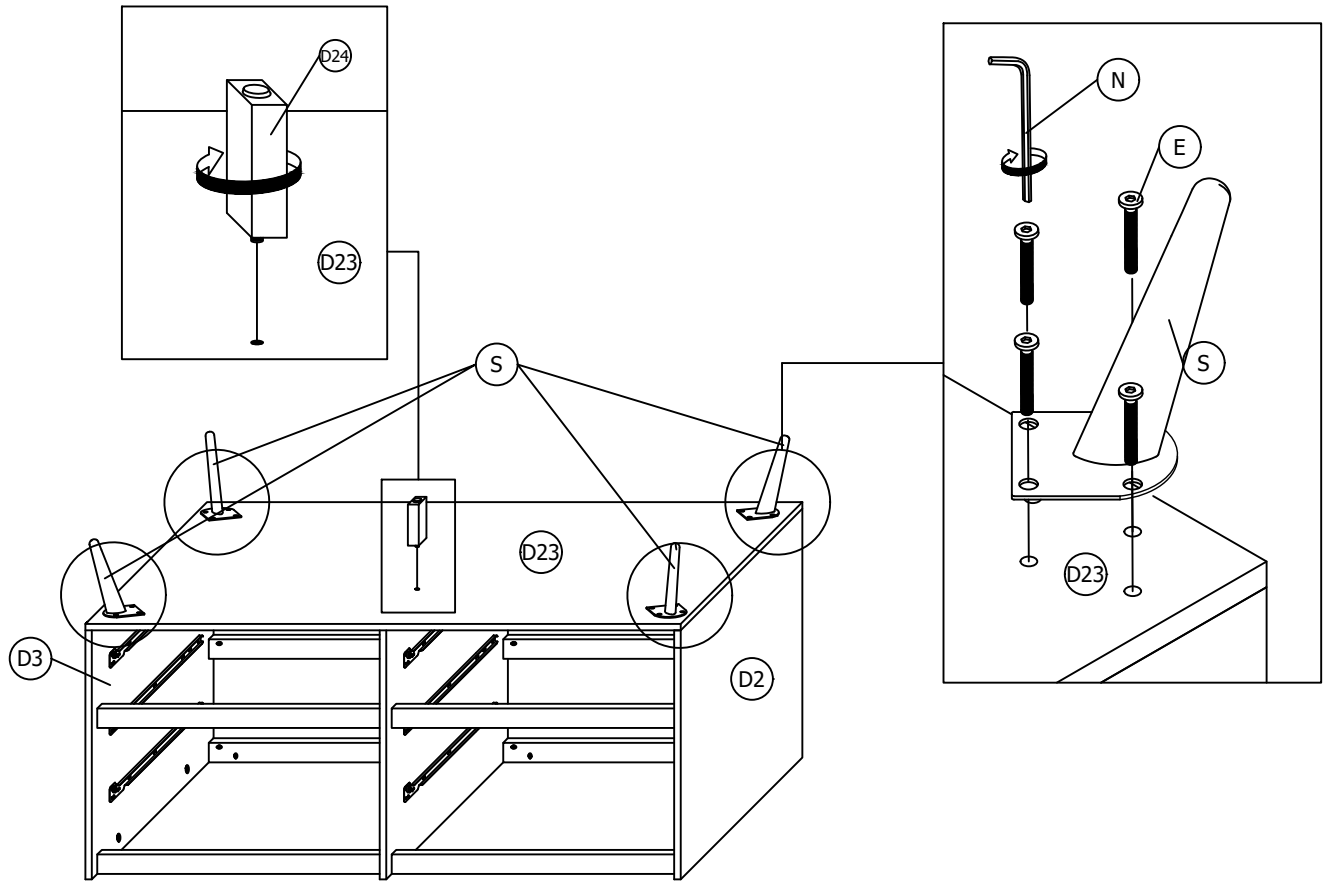

STEP 19

Combine the (D1) to the frame then tighten the remaining 18 pieces (A)-(pre insert in step 1,2,4,5,7 and 8) as shown.

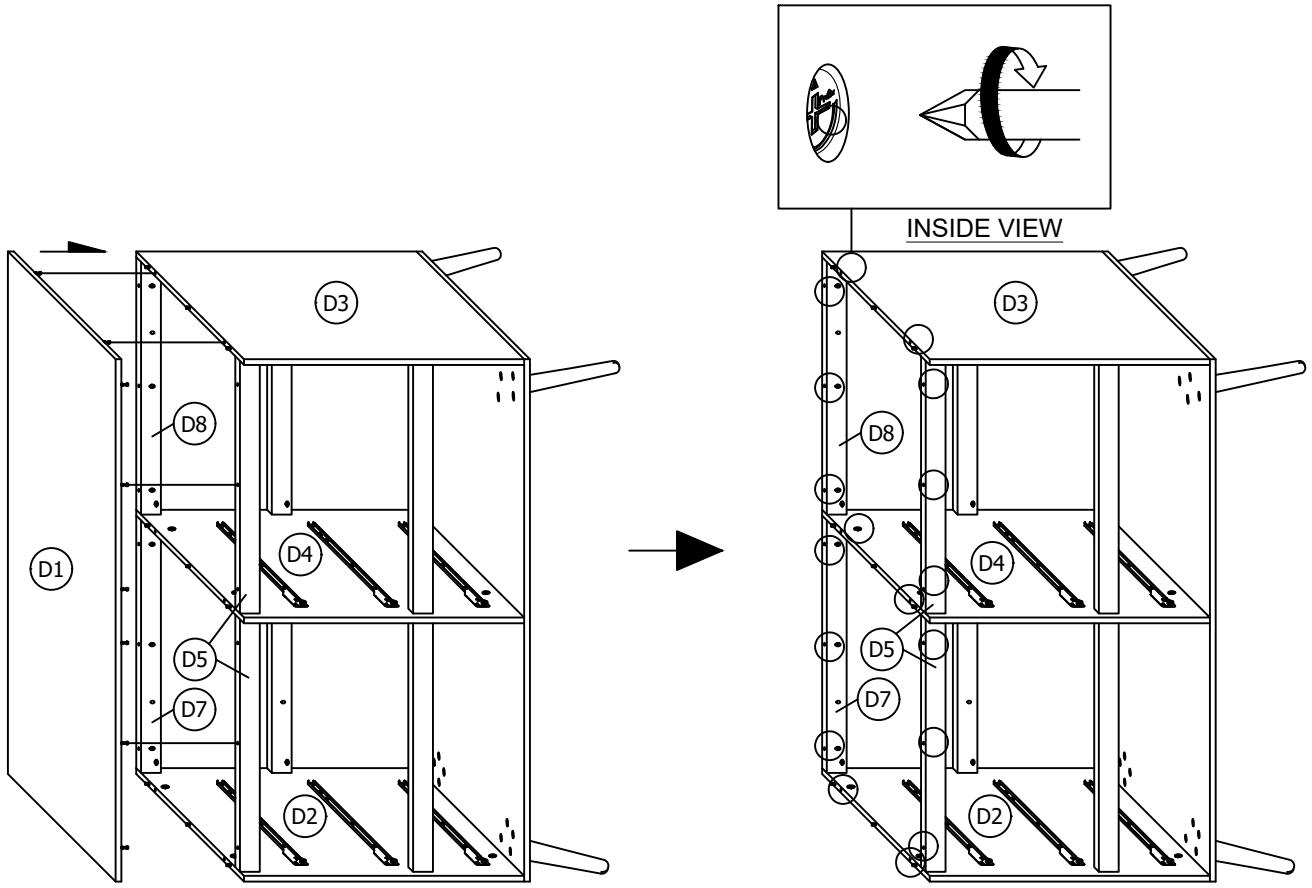

STEP 20

Put the (D12A) and (D12B) to the gap of (R) as shown.Direction of the side with colored paper must be the same.

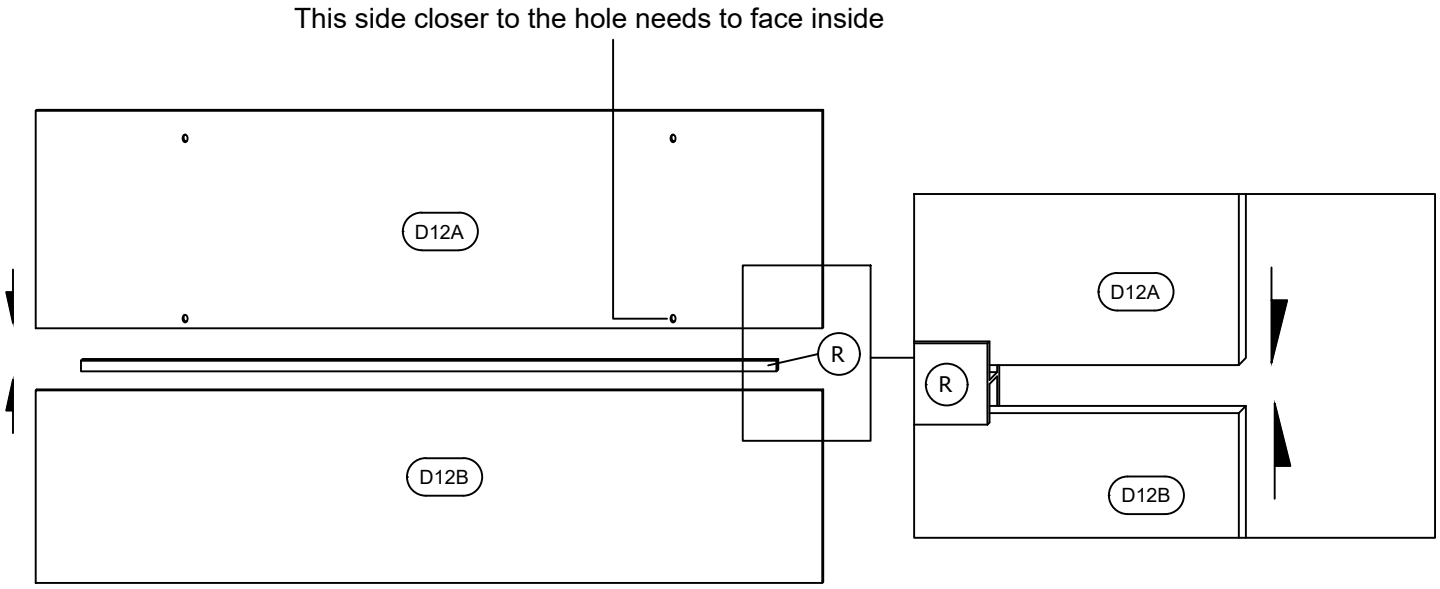

STEP 21

Insert the 24 pieces (L) to fix the (D12A) and (D12B) as shown. Colored paper face to outside.
To prevent blocking (D2) and (D3), make sure the (R) at the middle of (D12A) and (D12B) , do not over left or right.

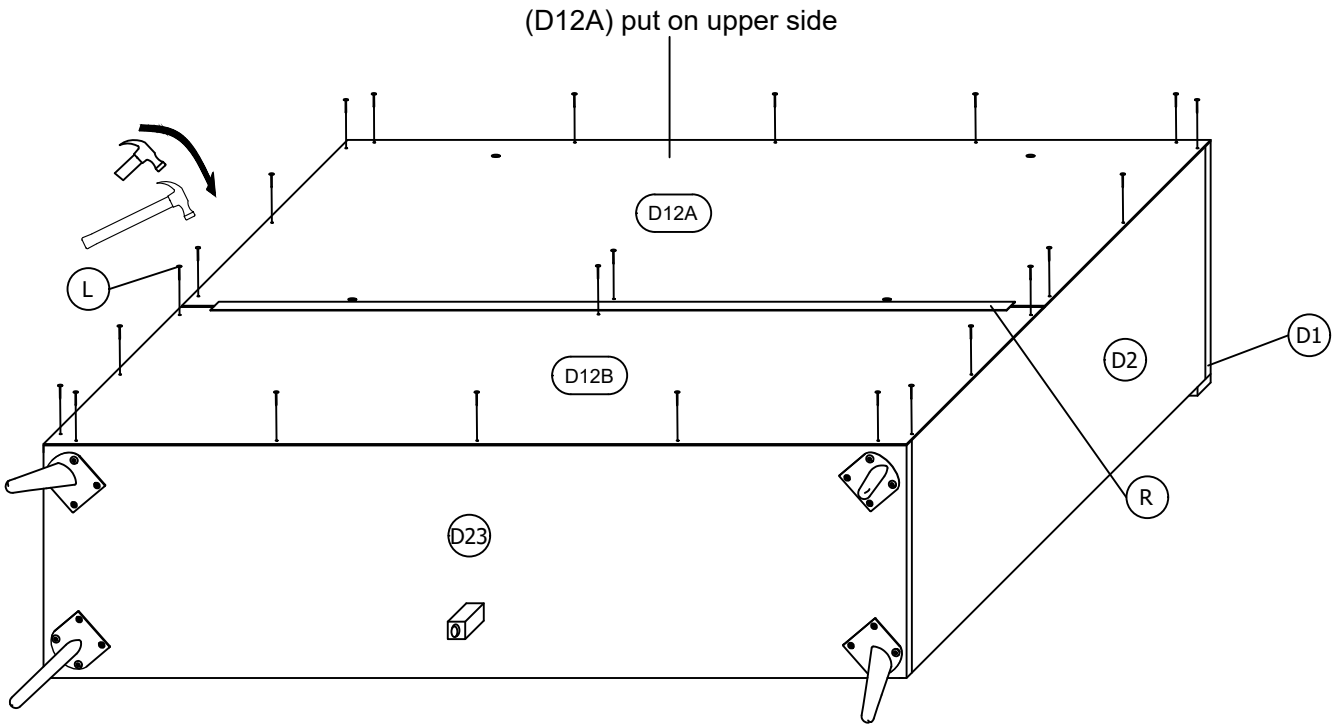

STEP 22

Insert 3 pieces (B) to (D13) as shown.This step needs to be **done six times**.

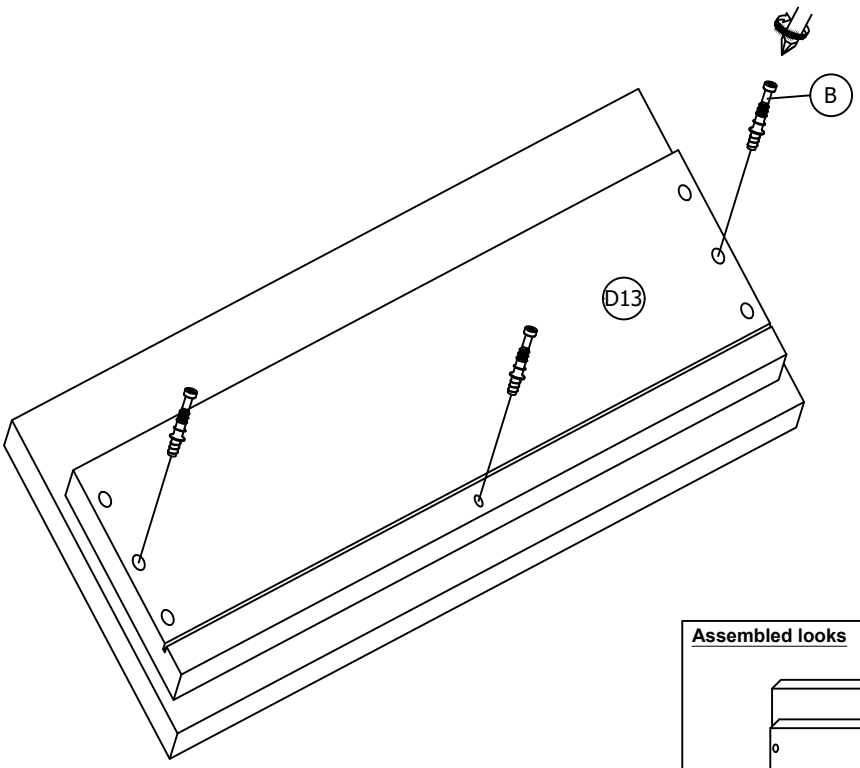

Assembled looks

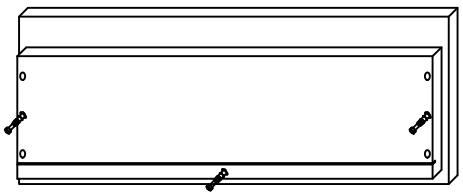

STEP 23

Insert 1 piece (A),(B) and 2 pieces (D) to (19) as shown.This step needs to be **done six times**.

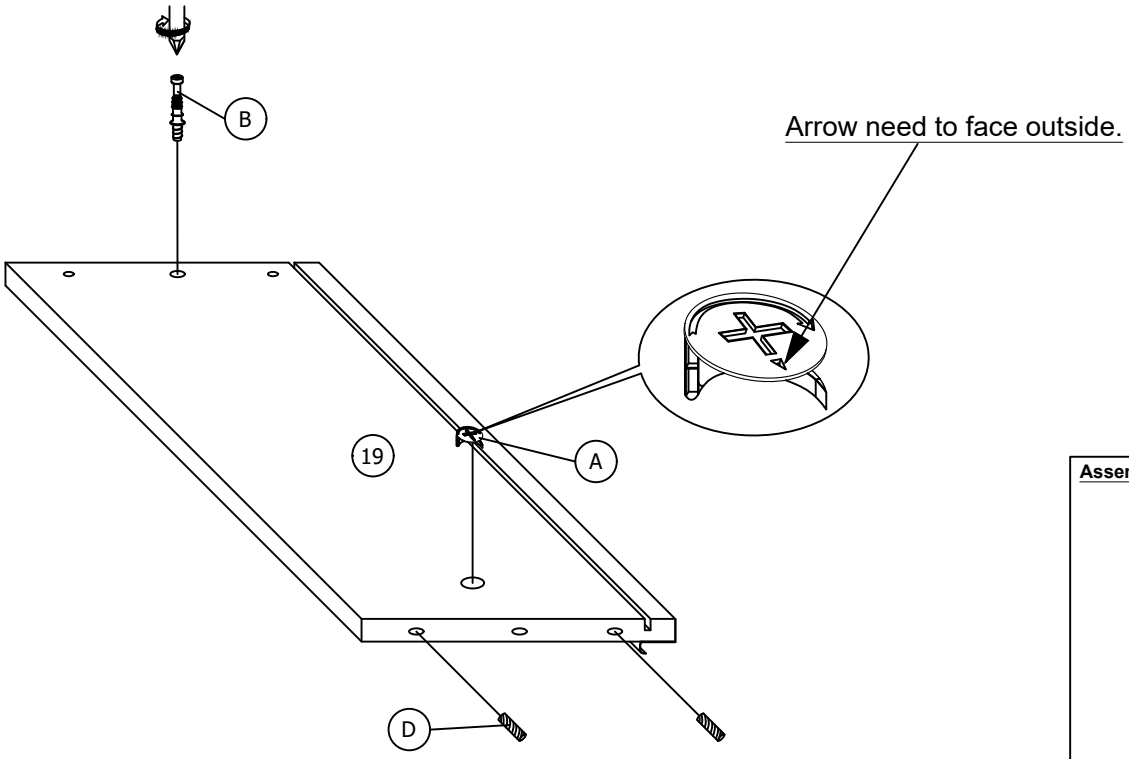

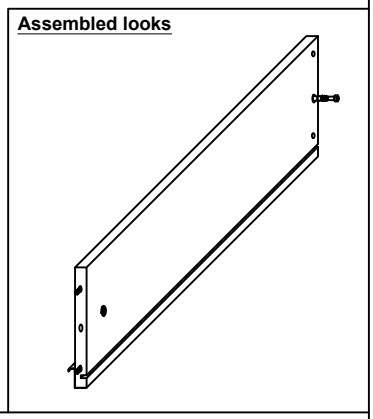

STEP 24

Insert 1 piece (A),(B) and 2 pieces (D) to (20) as shown.This step needs to be **done six times**.

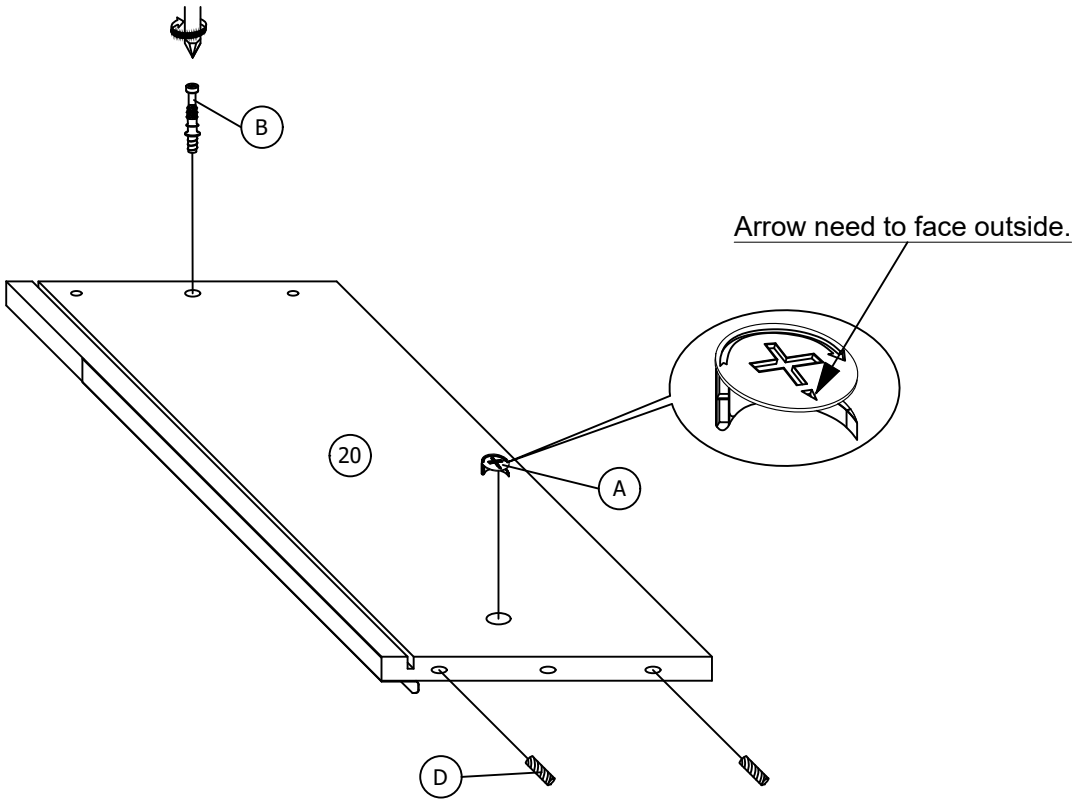

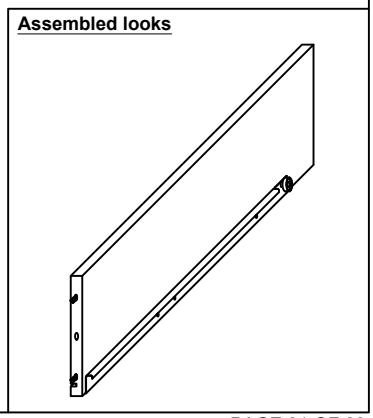

STEP 25

Insert 2 pieces (A) , 1 piece (B) and 4 pieces (D) to (D14) as shown.This step needs to be **done six times**.

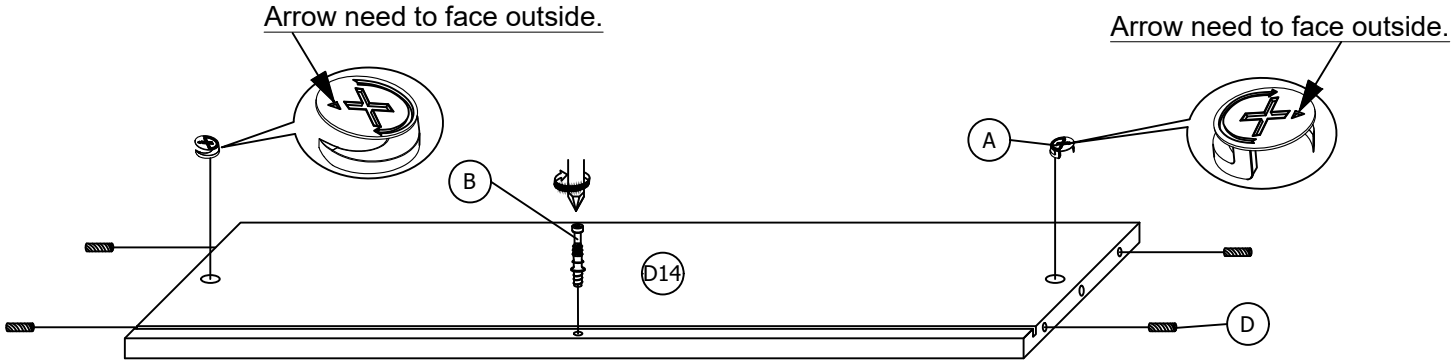

Assembled looks

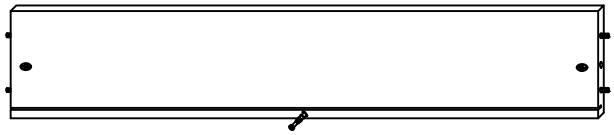

STEP 26

Insert 2 pieces (A) to (21) as shown. This step needs to be **done six times**.

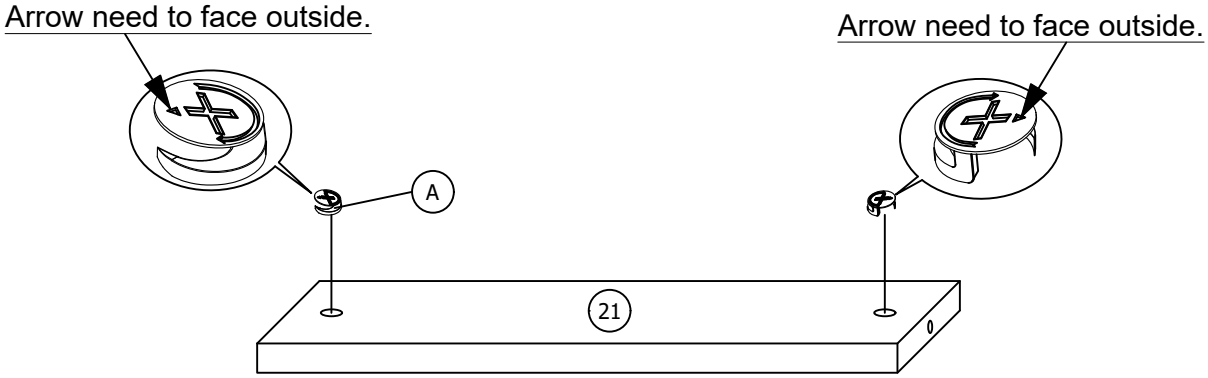

Assembled looks

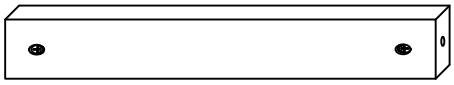

STEP 27

Combine (19) and (20) to (D14) then tighten the 2 pieces (A)-(pre-insert in step 25) as shown. This step needs to be **done six times**.

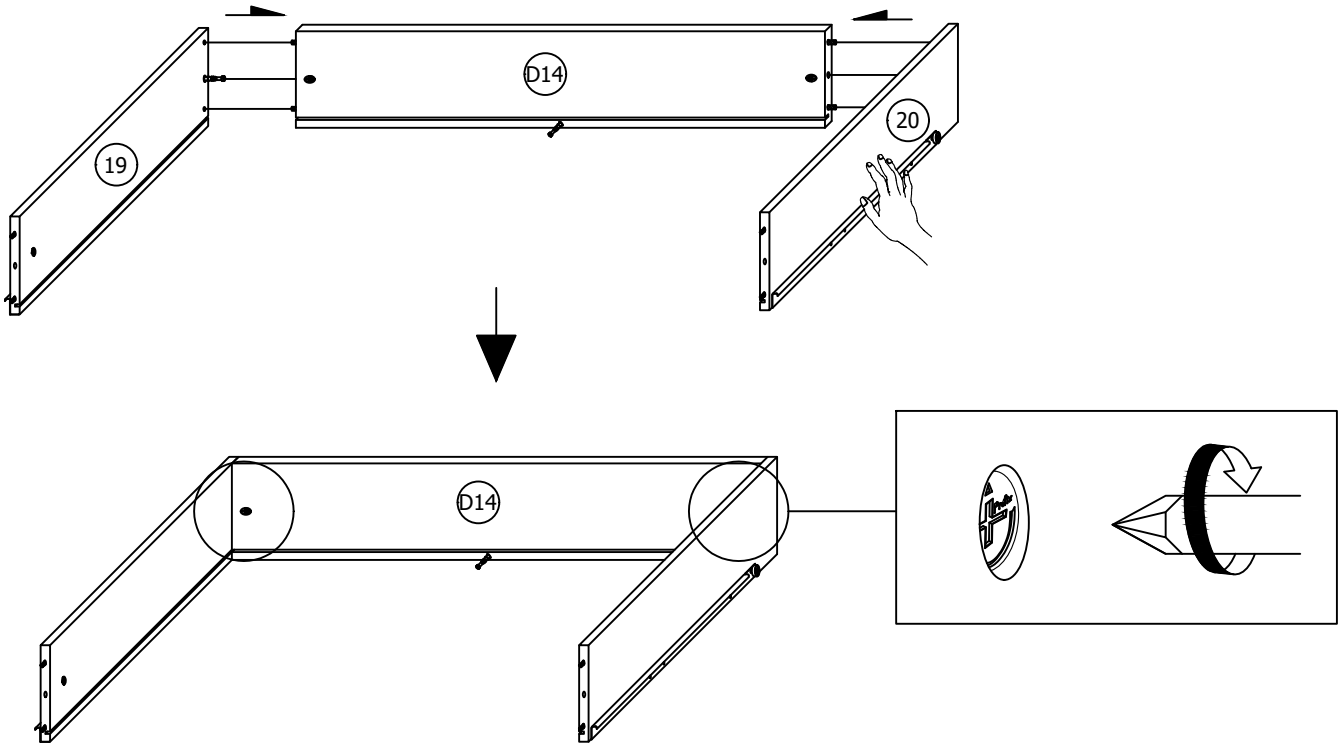

STEP 28

Put the (D15) into the gap of (19),(20) and (D14) as shown.This step needs to be **done six times**.

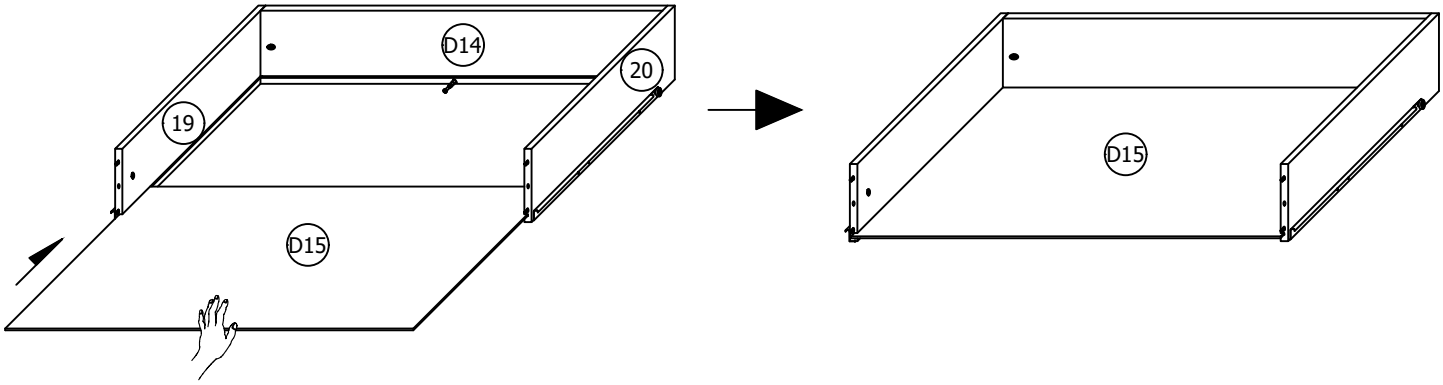

STEP 29

Combine the (21) to the (D14) then tighten the 1 piece (A)-(pre-insert in step 26) as shown.This step needs to be **done six times**.

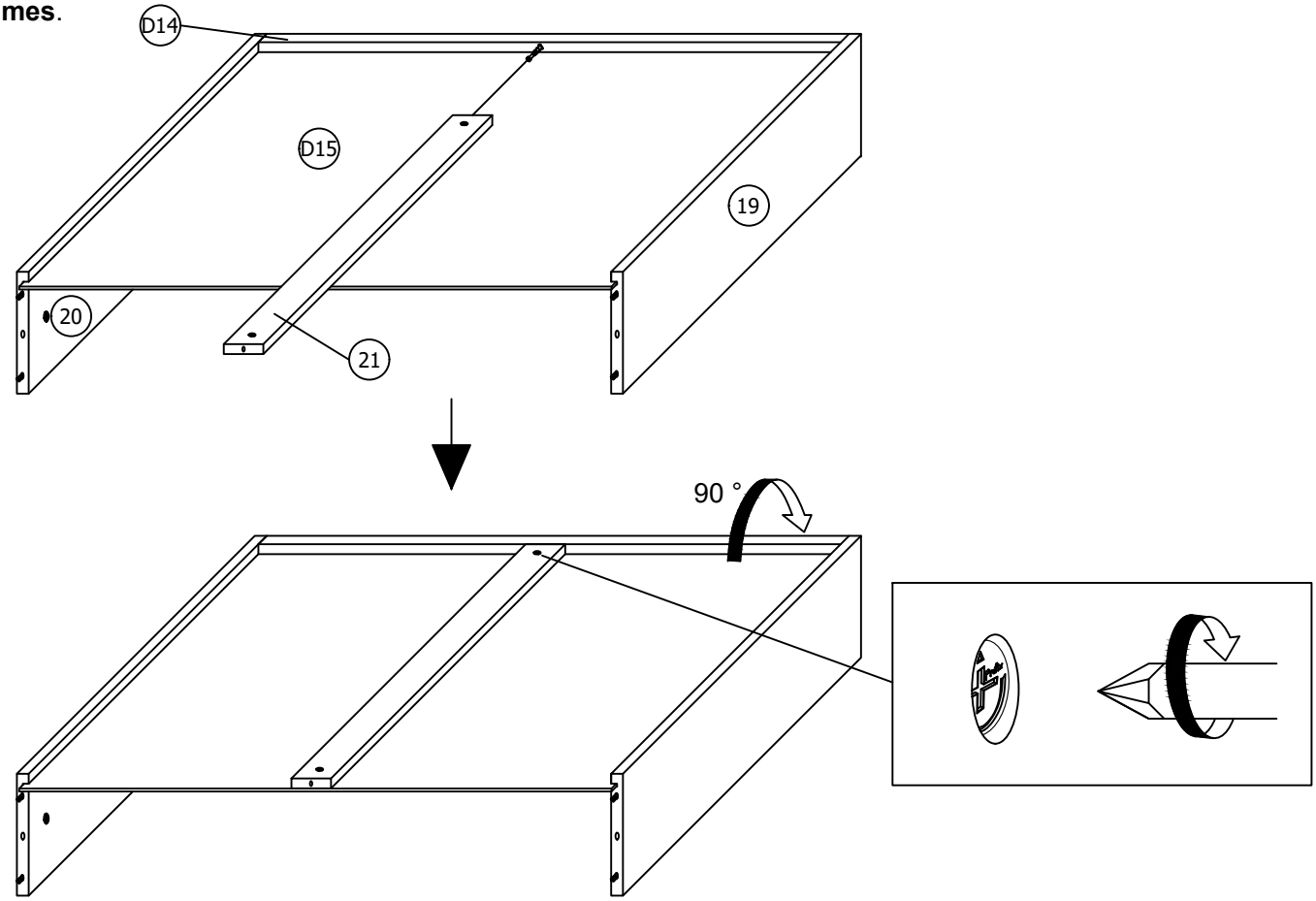

STEP 30

Combine the (D13) to the drawer frame. Then tighten the 3 pieces (A)-(pre-insert in step 23,24 and 26) as shown.This step needs to be **done six times**.

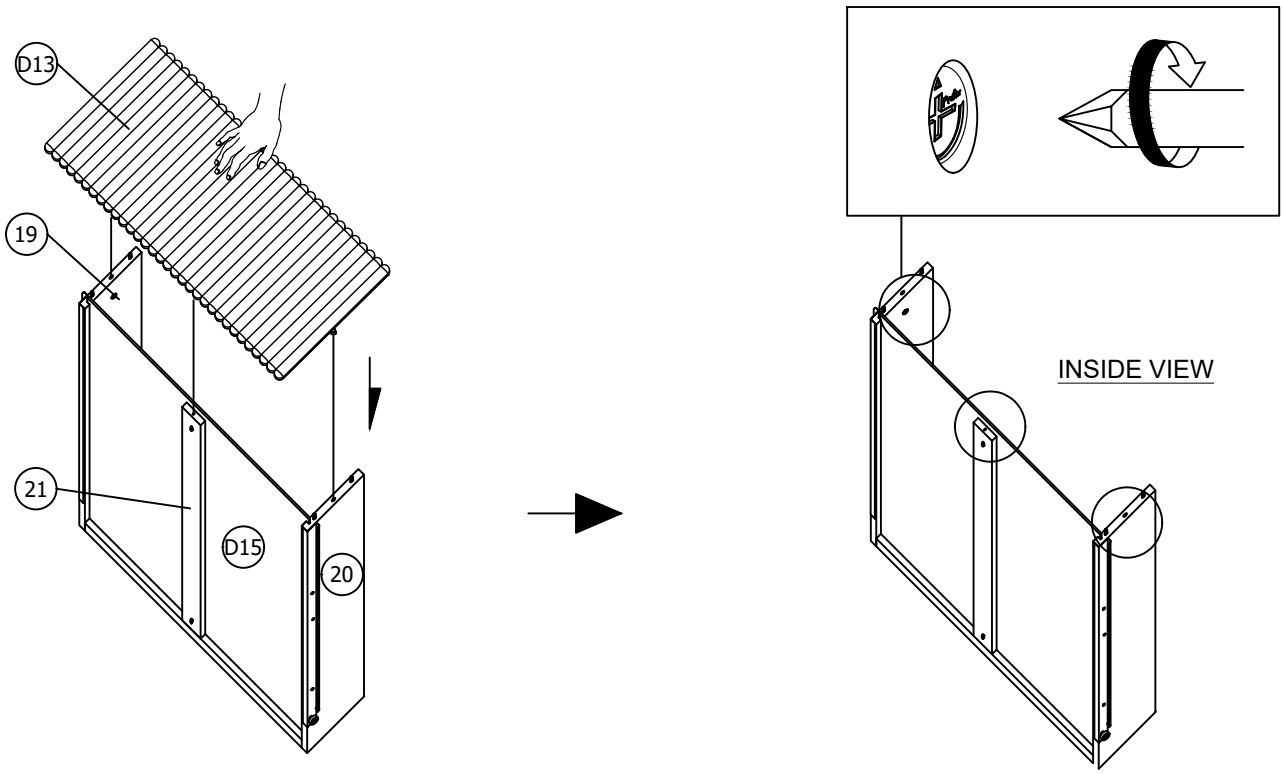

STEP 31

Insert 2 pieces (I) fix the (M) as shown.**This step needs to be done six times.**

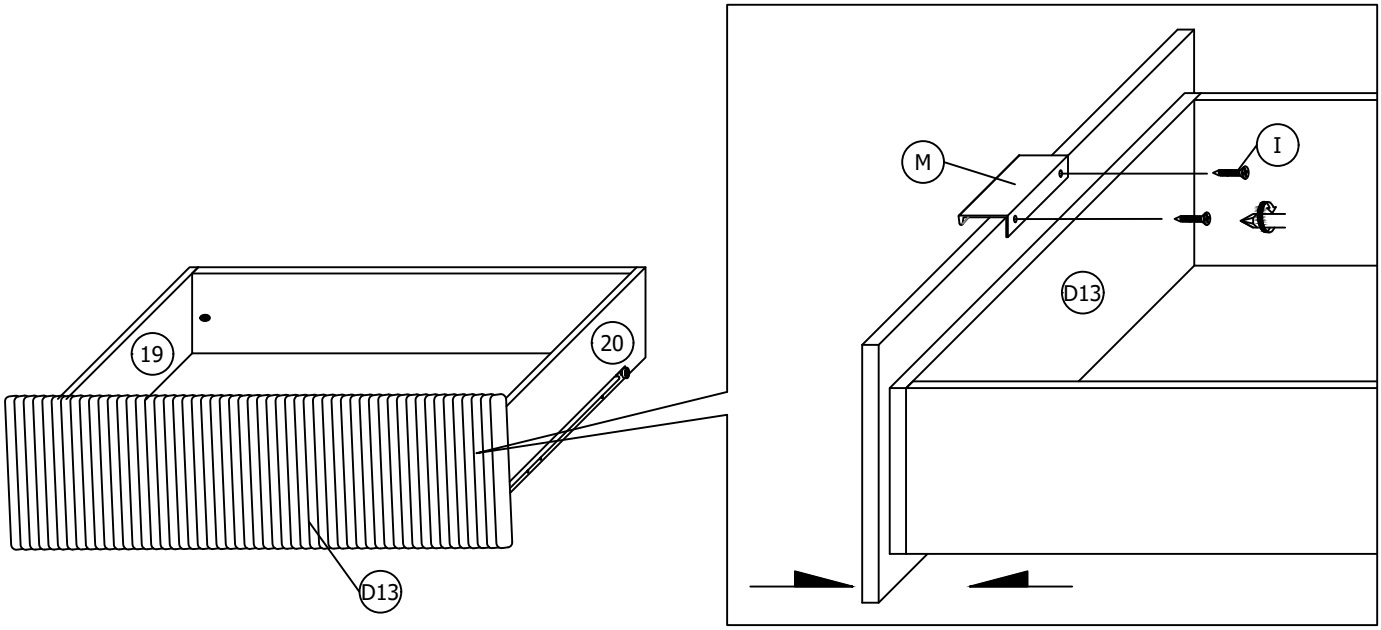

STEP 32

Align the position then push the 6 pieces drawer to inside exactly by your hand as shown.

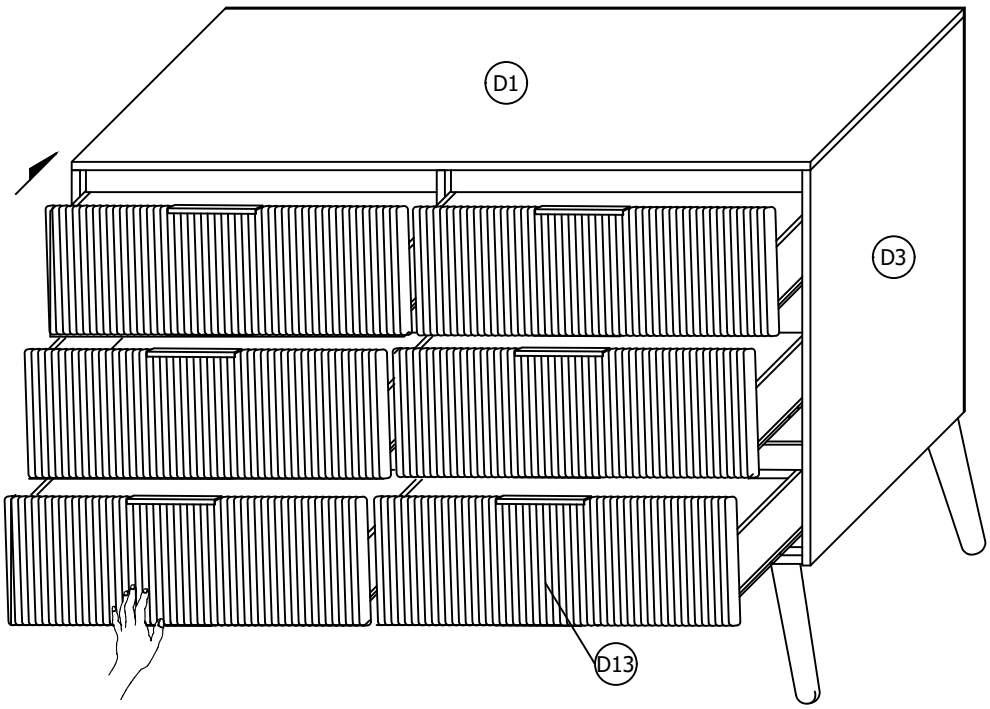

STEP 33

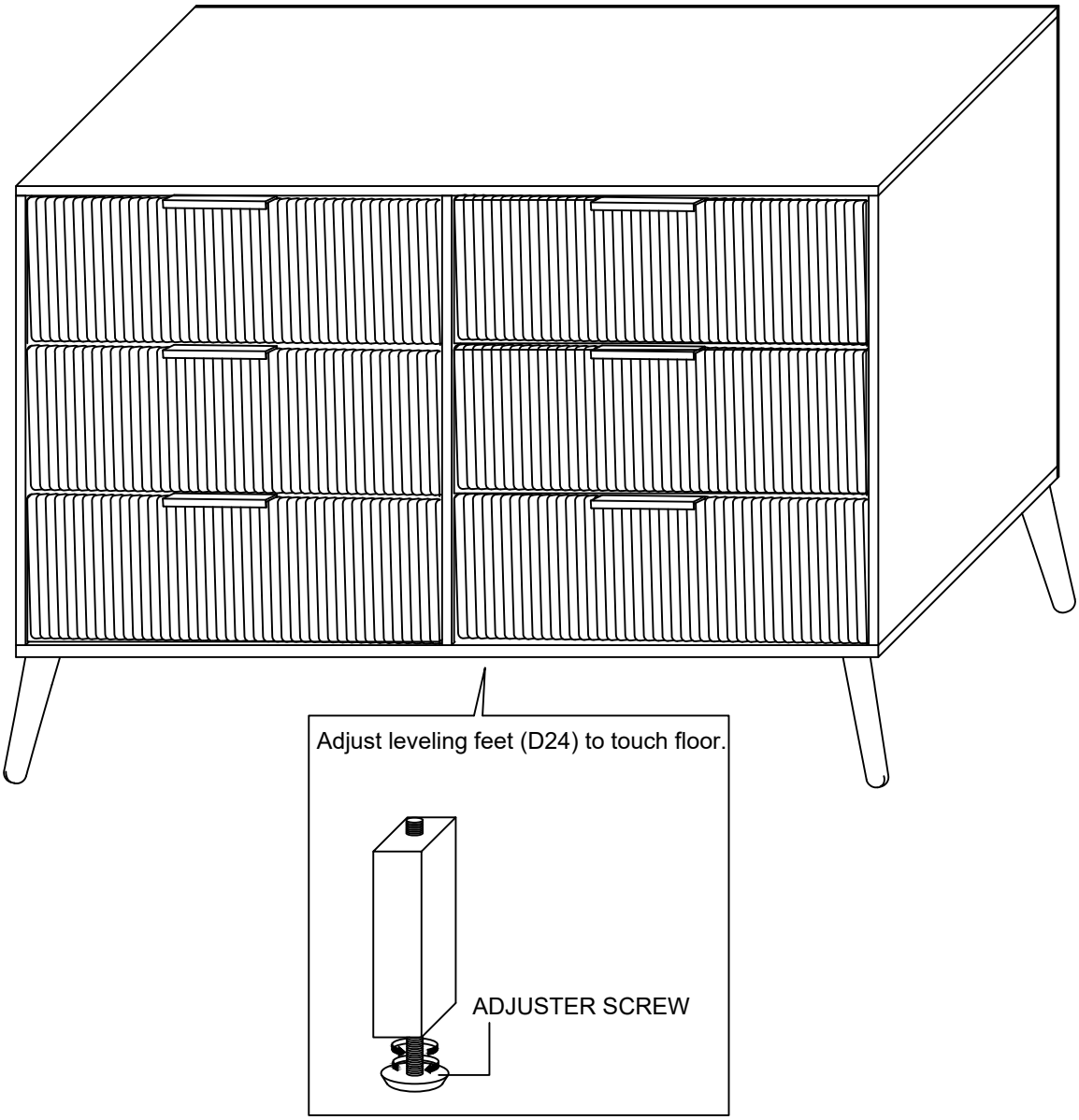

ASSEMBLY COMPLETED

WALL STUD

SAFETY BRACKET INSTRUCTIONS

Part Enclosed :

A) Bracket	B) Safety Strap	C) 50mm Pan Head Screw	D) 17mm Pan Head Screw
2x	1x	1x	1x

IMPORTANT: Tipping can injure young children. Use of this safety hardware is highly recommended. This safety hardware, when properly installed, can provide furniture protection against unexpected accidental tipping of furniture due to improper use.

Step 1

Attach a bracket to the wall board with the 2" screw provided:

- It is recommended that you locate a wall stud behind the furniture unit. If the wall stud is not used, a suitable "Hollow-Wall Anchor Bolt" (not provided) should be used in lieu of the wall stud.
- Position the wall bracket on the stud about 1" below the top of furniture piece.
- Mark the position for the bracket placement on the wall and drill a pilot hole into the stud.
- Attach the bracket to the back of the furniture with the 2" screws provided.

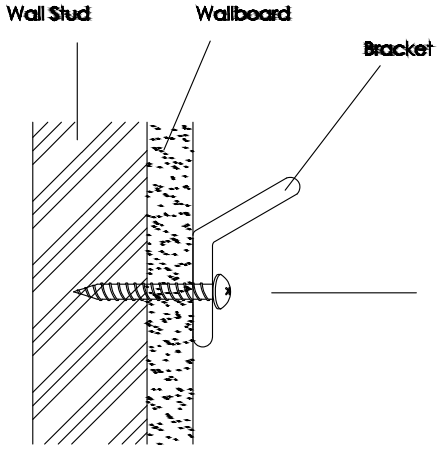

Step 2

To attach a bracket to the Furniture Frame below to top with the short screws provided :

- Move the furniture piece temporaily to its final position to the wall.
- Mark the location of the bracket on the back of the furniture in relation to the previously mounted wall bracket.
- Move the furniture piece away from the wall mounted bracket and place the other bracket on the mark position on the back of the furniture piece.
- Drill a pilot hole as shown in the figure or into the back furniture frame.

  Caution: Mark sure you do not drill completely through the back of the furniture.
- Attach the bracket to the back of the furniture with the 5/8" screws provided.

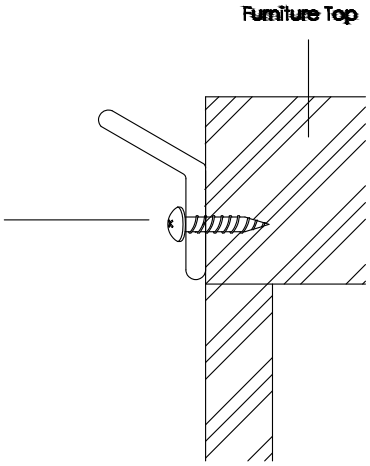

Step 3

To Attach the safety strap:

- Move the furniture back to its final position.
- Thread the safety strap through both of the mounted brackets as shown in the illustration.
- Tighten the strap unit snug.
- Do not over tighten.

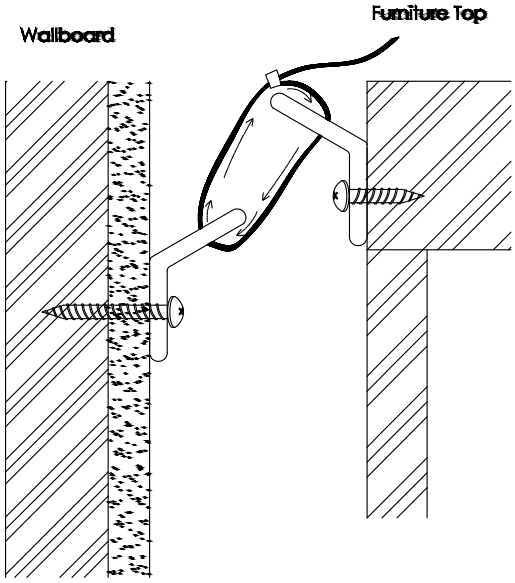

IMPORTANT: Make sure the brackets are firmly attached to the wall stud and furniture frame and the safety strap is snug.

Warning: This product is not be a subsitute for proper parental supervision which is the only proper deterrent to prevent improper use of this unit. The manufacturer assumes no liability for improper installation or excessive loads placed on the safety straps, bracket or mounting screws. This hardware will not insure against tipping.

Note: For taller or heavie pieces of furniture, two safety brackets may be installed.

This sticker was sticked at one of the DRAWER LEFT PANEL(19).
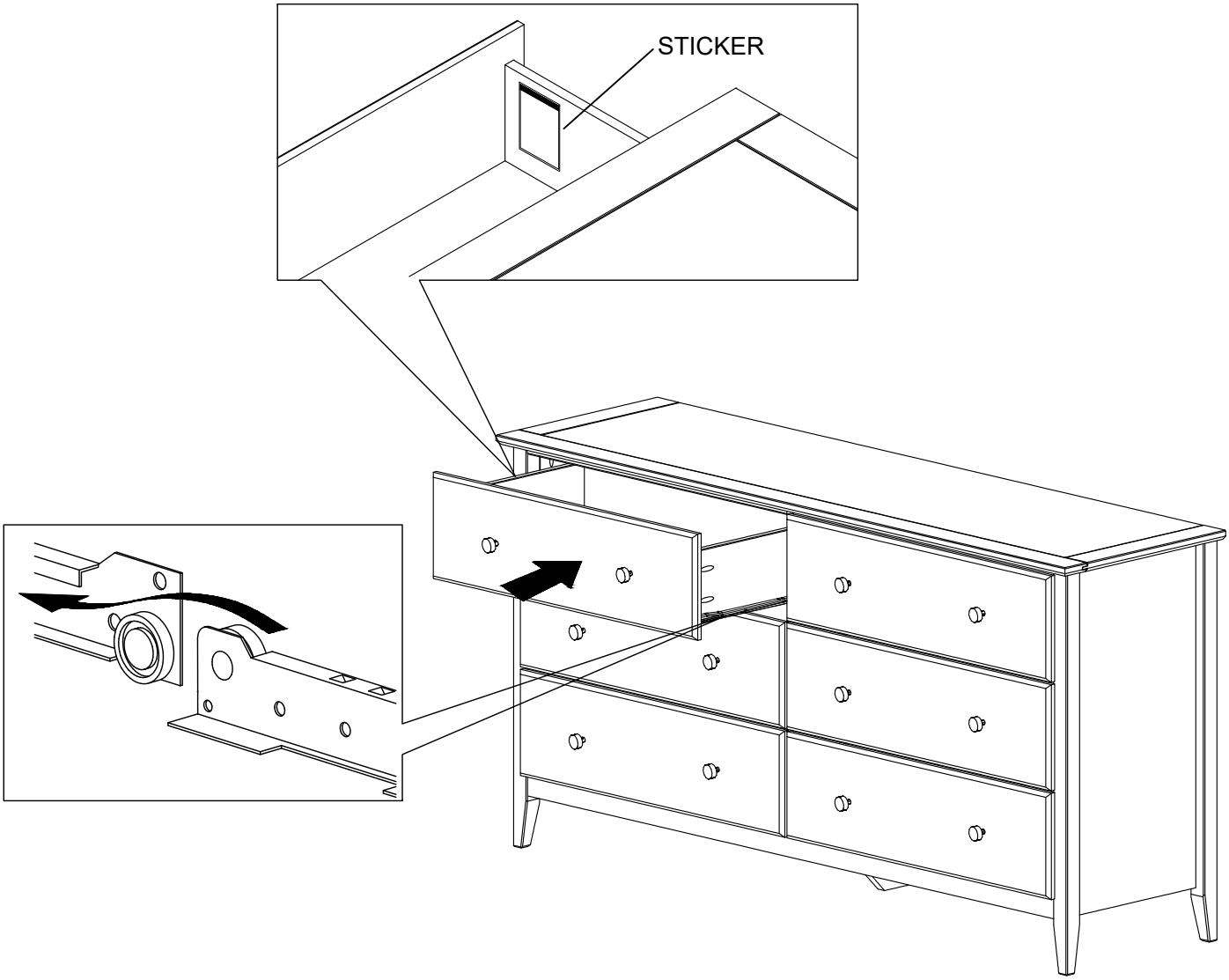
Place the drawer which sticked a warning label in the top as shown.