ASSEMBLY INSTRUCTION

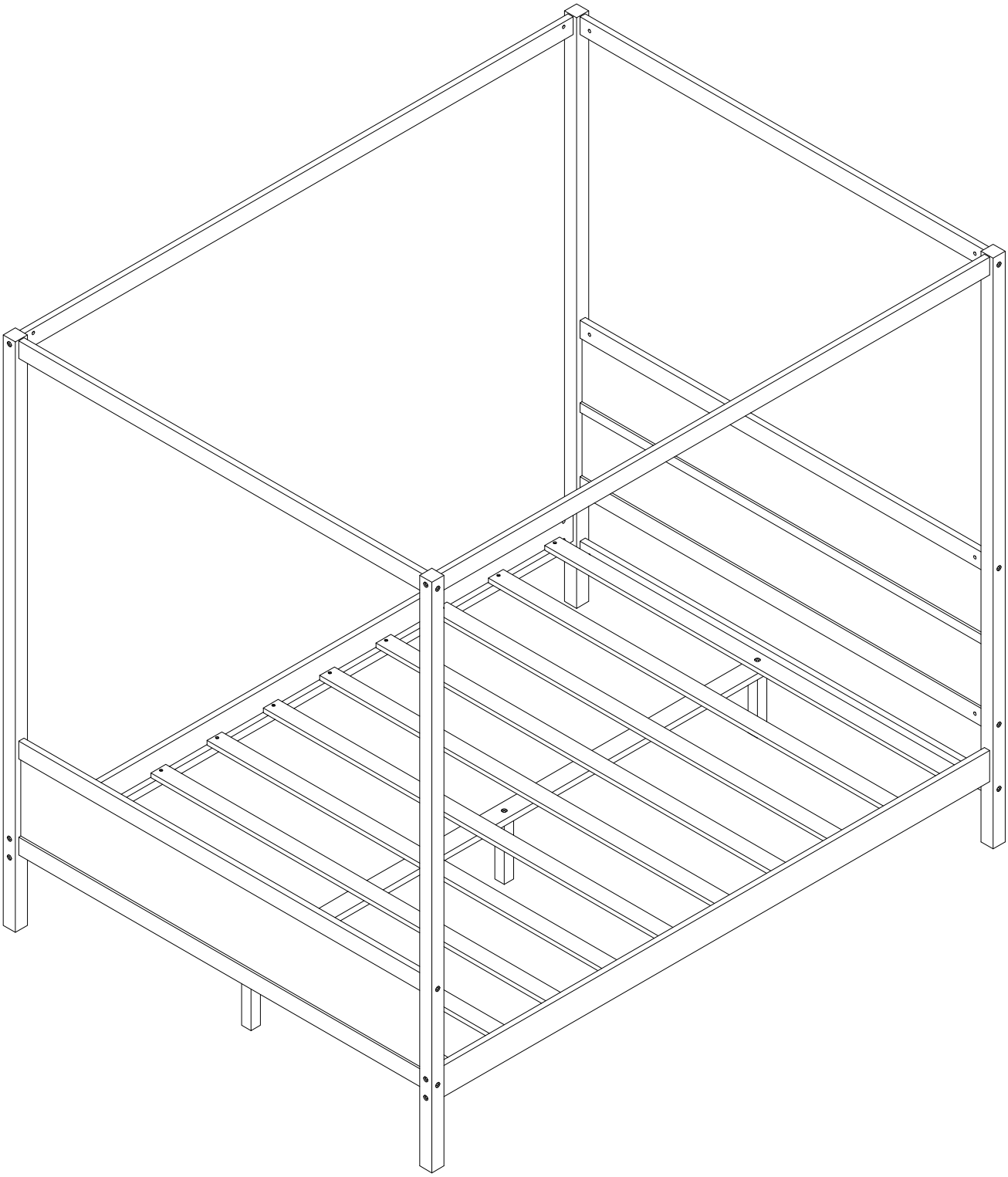

SAFETY WARNINGS AND GENERAL NOTES：

Do not use substitute parts. Contact the manufacturer or dealer for replacement

Keep these instructions for future reference.

We recommend assembling your bed on the shipping carton to protect your floor

Be certain all staples are out of the box before beginning assembly on the shipping

ASSEMBLY INSTRUCTION

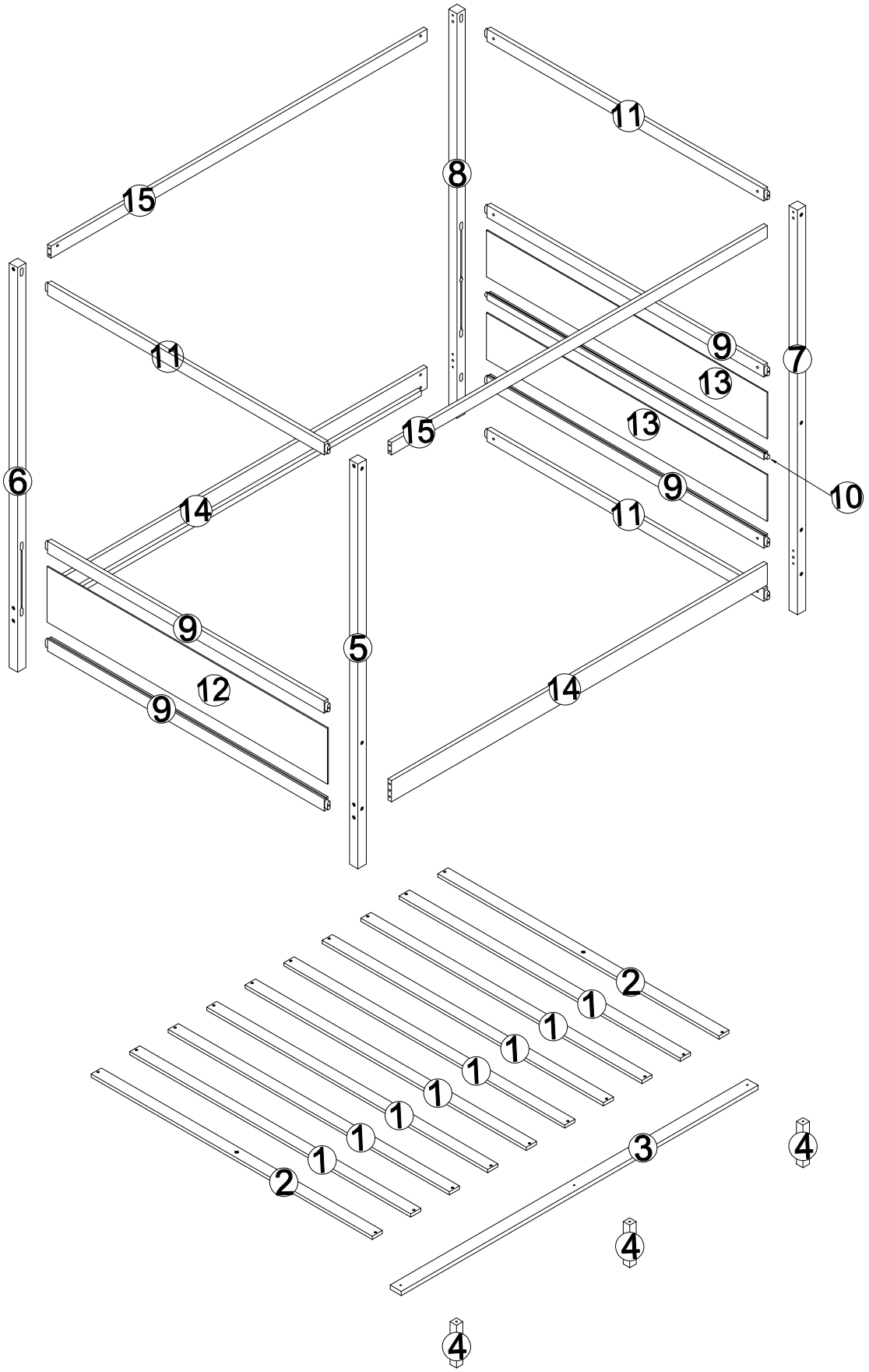

Part List &Hardware List

1 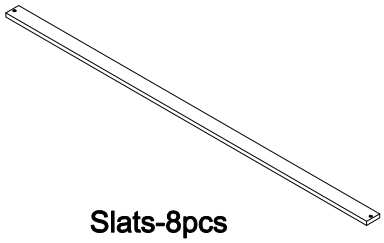 Slats-8pcs	2 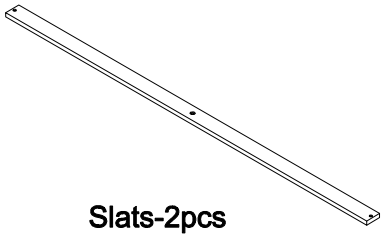 Slats-2pcs	3 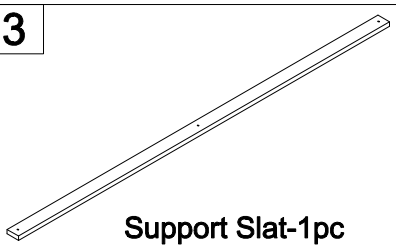 Support Slat-1pc
4 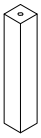 Center legs-3pcs	5 Leg-1pc	6 Leg-1pc
7 Leg-1pc	8 Leg-1pc	9 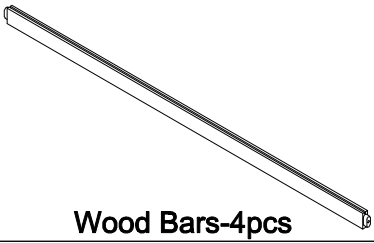 Wood Bars-4pcs
10 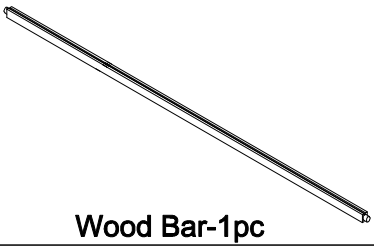 Wood Bar-1pc	11 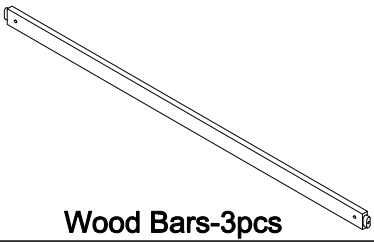 Wood Bars-3pcs	12 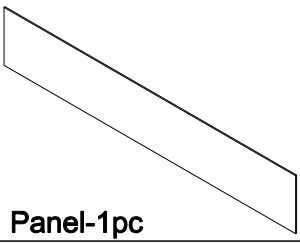 Panel-1pc
13 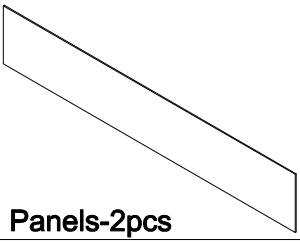 Panels-2pcs	14 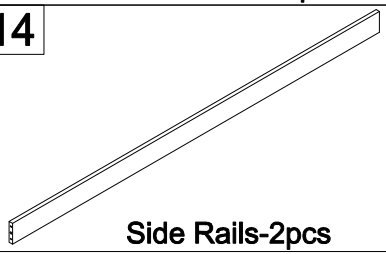 Side Rails-2pcs	15 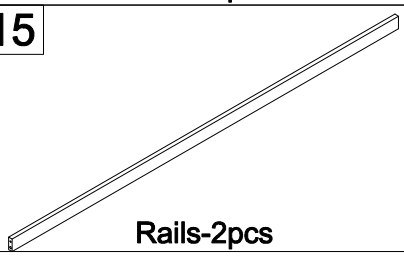 Rails-2pcs

Hardware List

A Ø1/4" x 90mm Hex-Head bolts 26pcs	B Ø1/4" x 13 mm Horizontal-Hole bolts 26pcs	C Ø10 x 40 mm Wood dowel 8pcs
D Ø1/4" x 50mm Hex-Head bolts 2pcs	E Ø1/4" x 35mm Hex-Head bolts 1pc	F M4 x 30 mm Wood Screws 20pcs

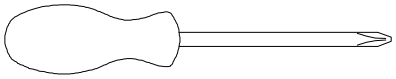

Assembly Tools Required (Not Included)

STEP 1: Following below illustration:

-Using hardward #A,#B Connect 9(x2),11 Wood Bar and 12 Panel With 5,6 Legs

-Look at detail view for more detail

A	B
6pcs	6pcs

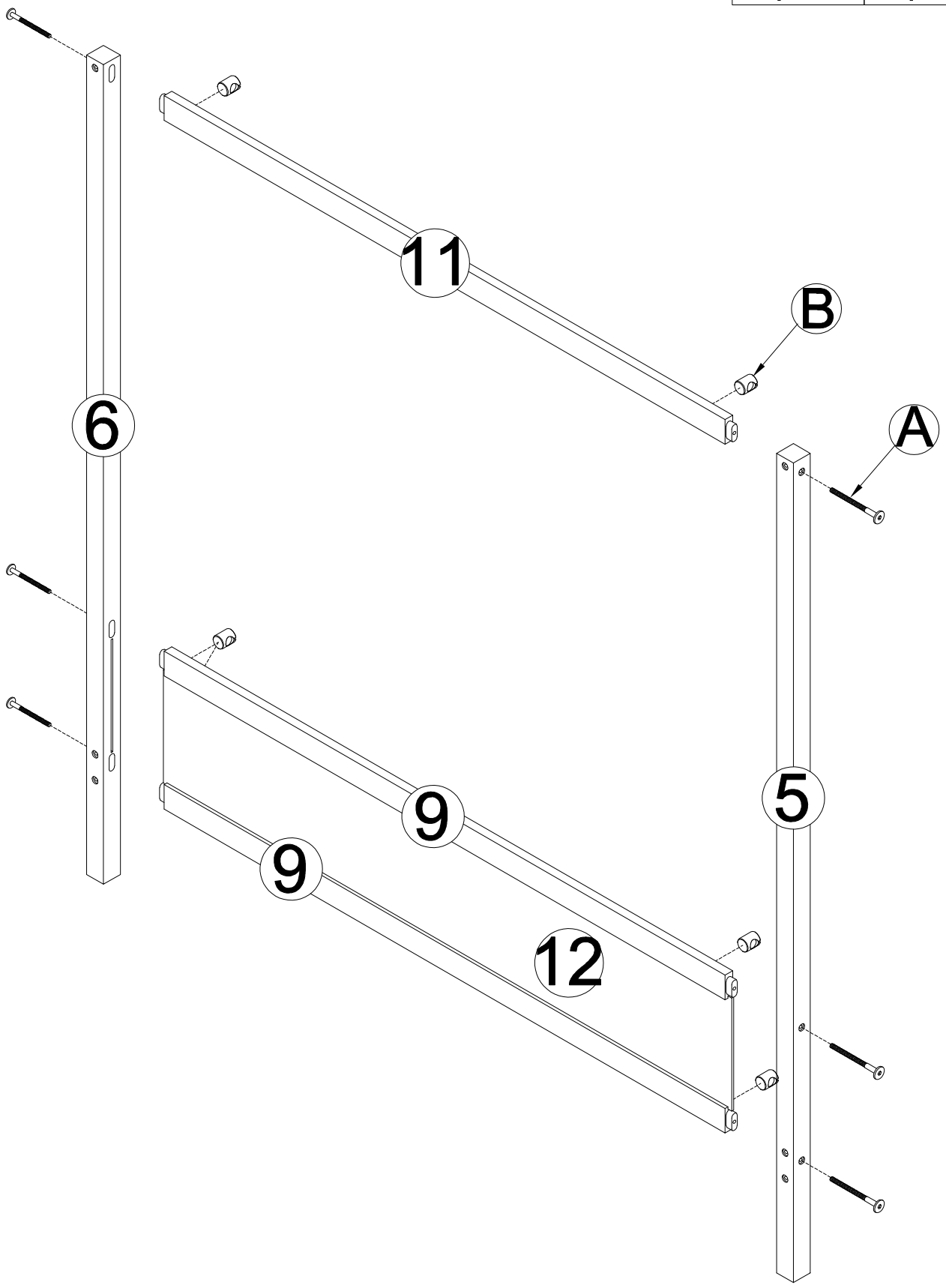

STEP 2: Following below illustration:

-Using hardward #A,#B Connect 9(x2),10,11(x2) Wood Bar and 13(x2) Panels With 7,8 Legs

-Look at detail view for more detail

A	B
8pcs	8pcs

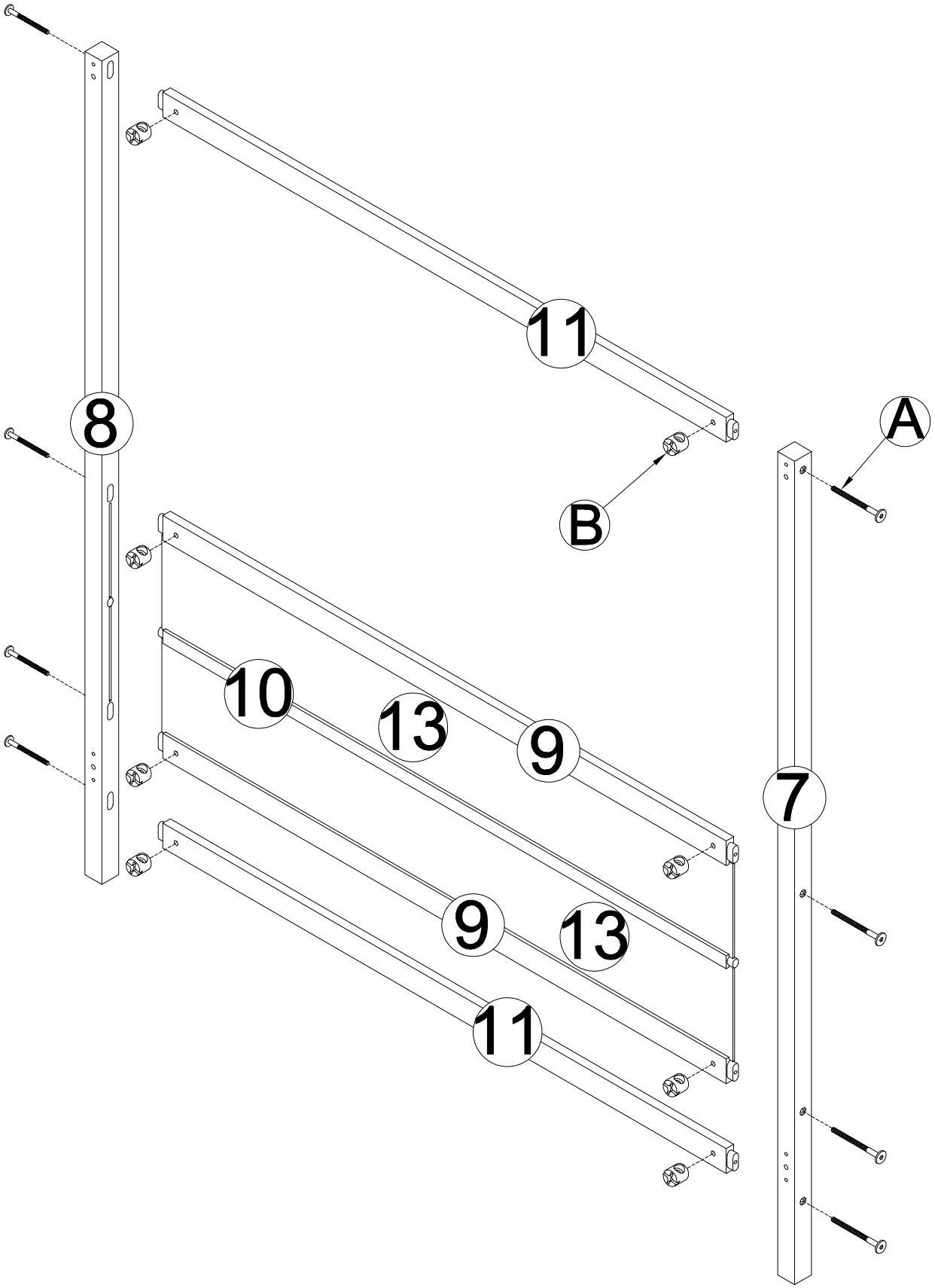

STEP 3: Following below illustration:

-Using hardward #A,#B and Dowel C Connect 14(x2) Side Rails and 15(x2) Rails With Frames (Completed on Step 1,Step 2)

-Look at detail view for more detail

A	B	C
12pcs	12pcs	8pcs

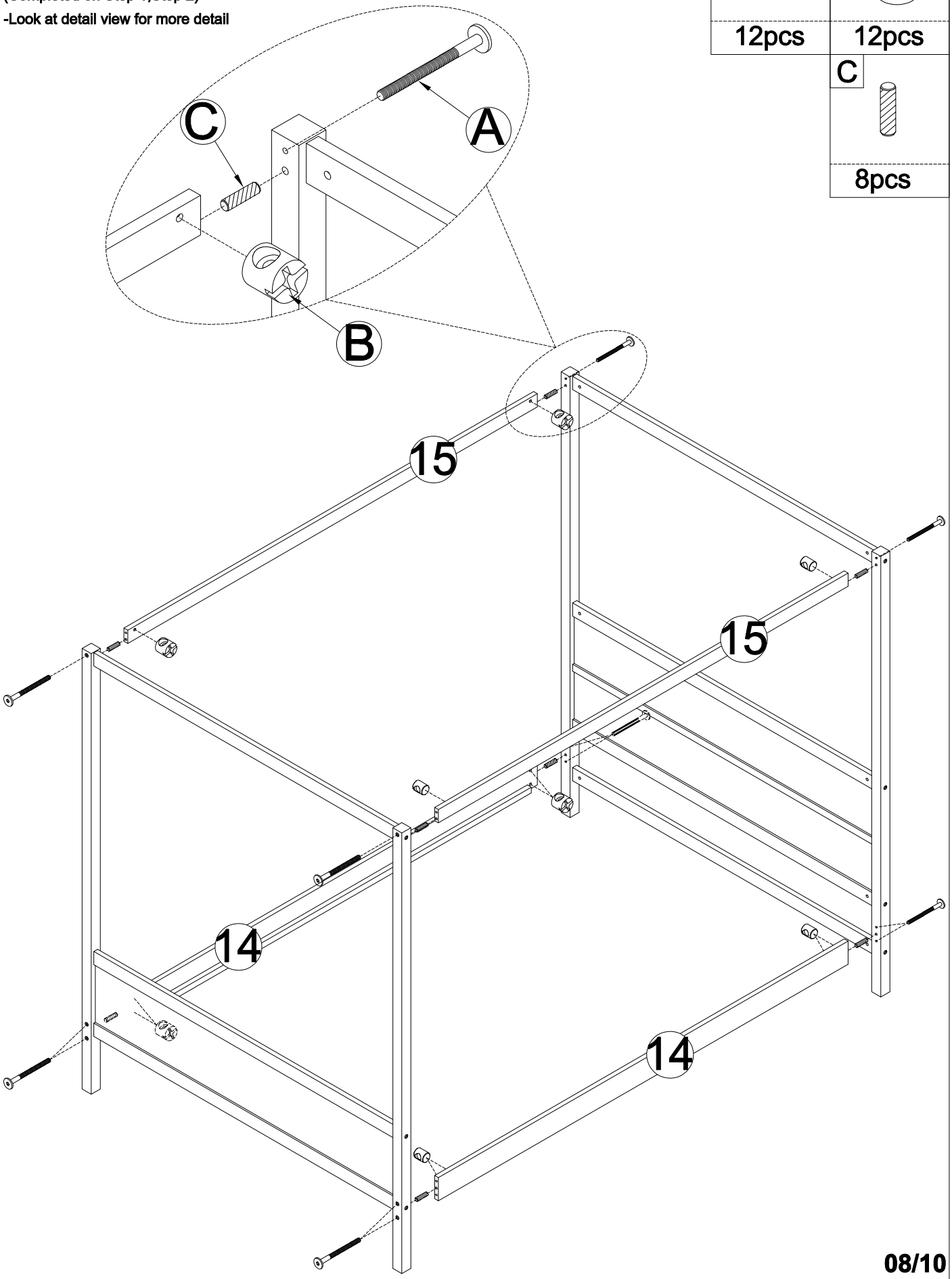

STEP 4-1: Following below illustration:

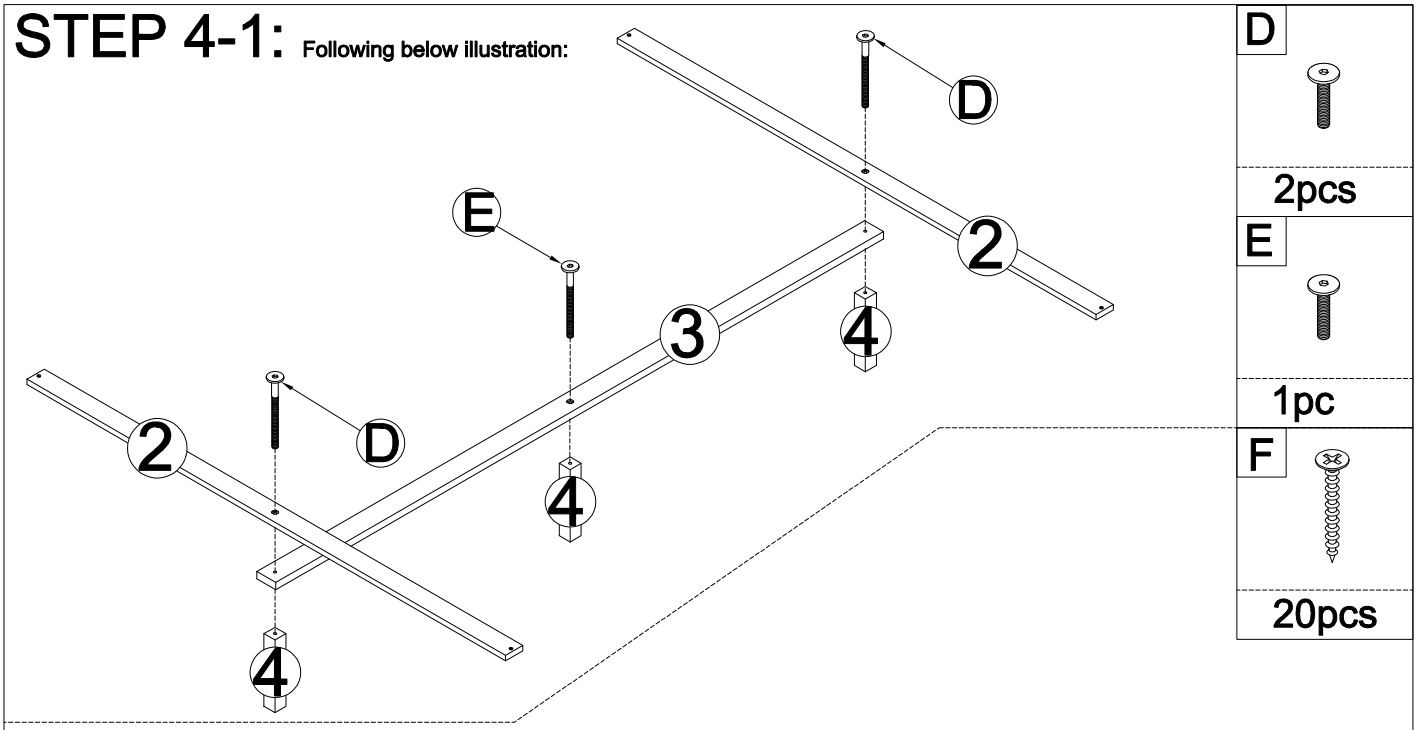

STEP 4-2: Following below illustration:

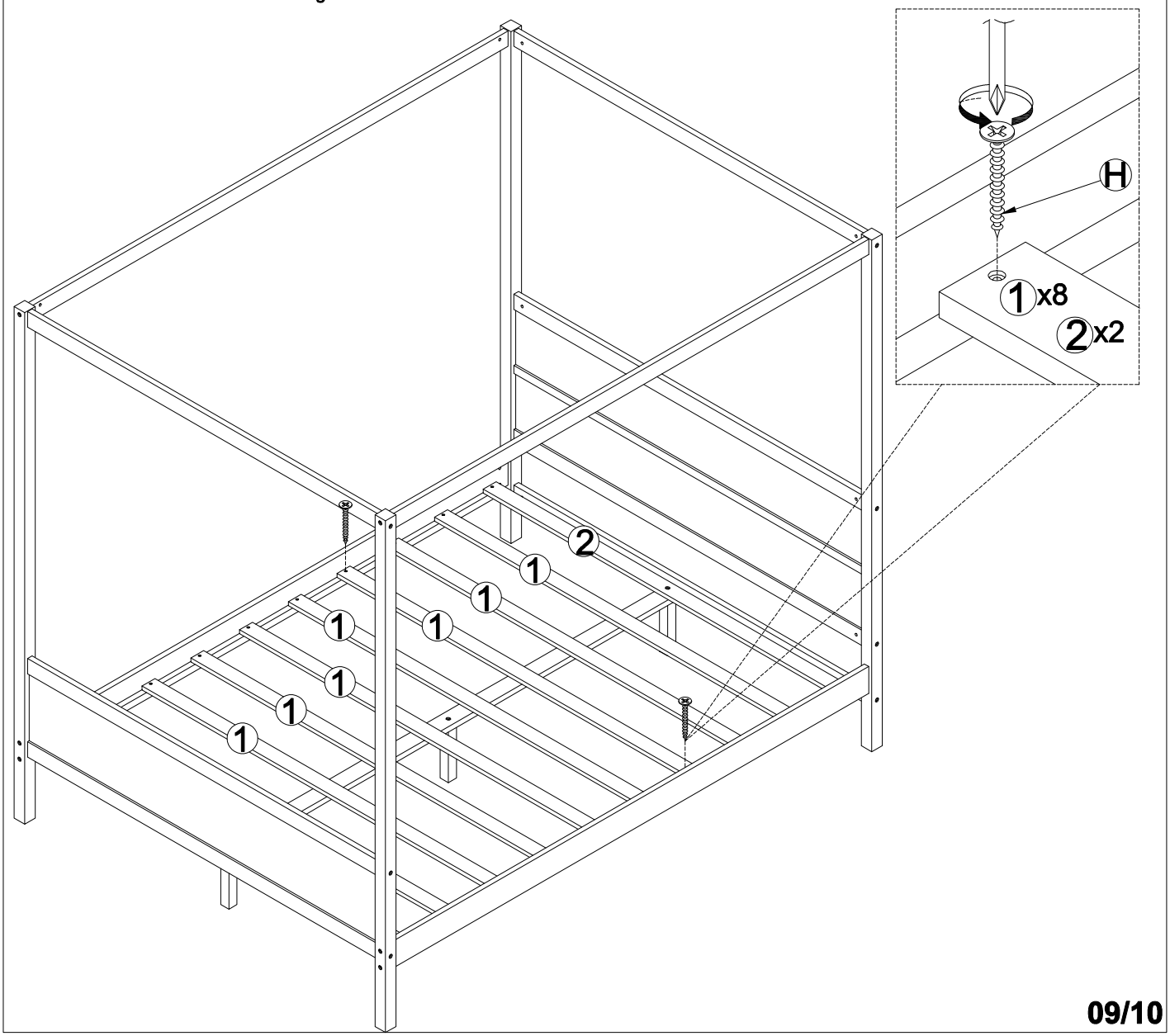
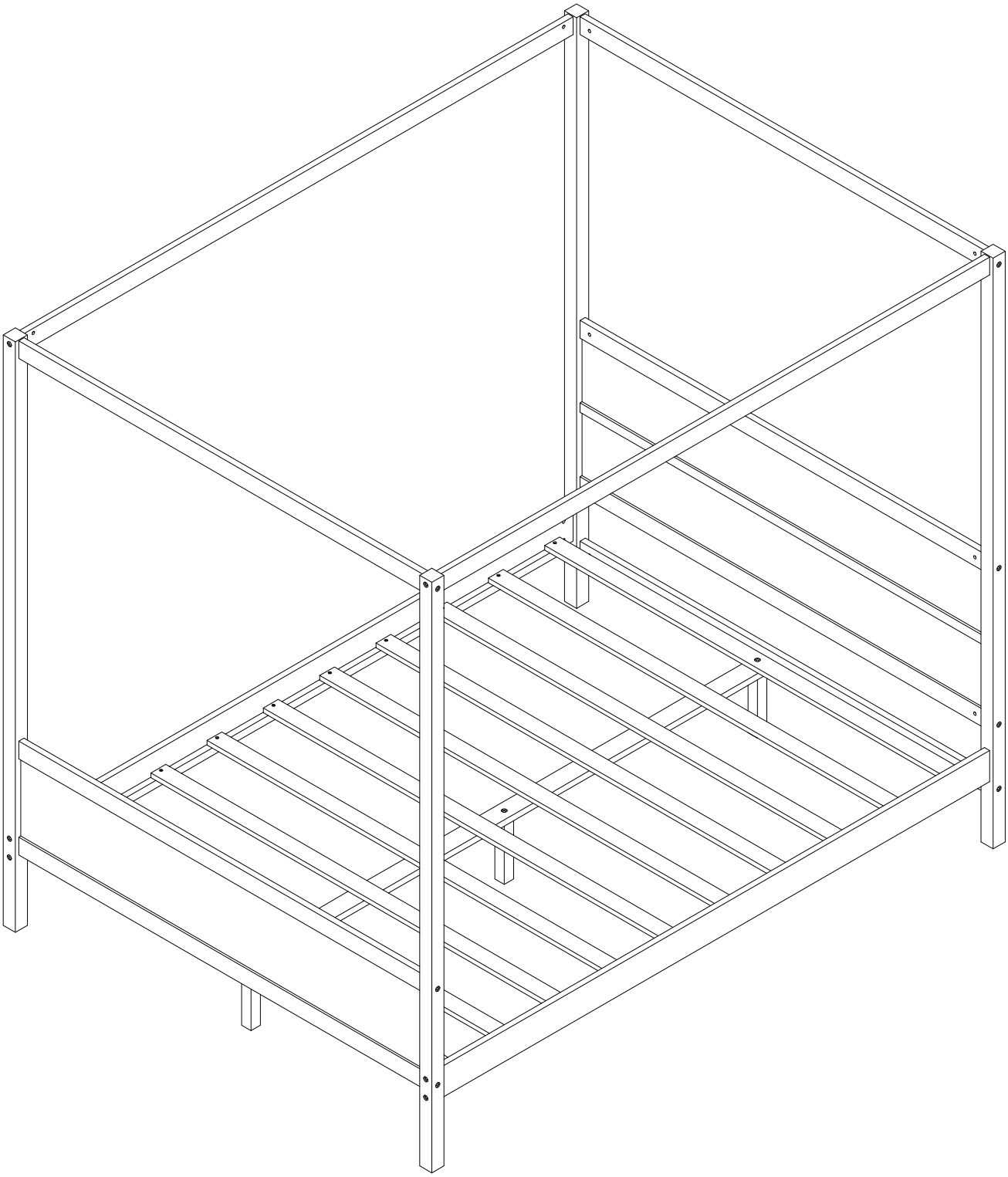
CONGRARULATION. YOU HAVE COMPLETED THE BED