VEVOR

Upgrade · The Home Creator Way

MODEL:ZD-XM02

VEVOR Support Center

HALL TREE

MODEL:ZD-XM02

VEVOR | Upgrade
The Home Creator Way

HALL TREE

MODEL:ZD-XM02

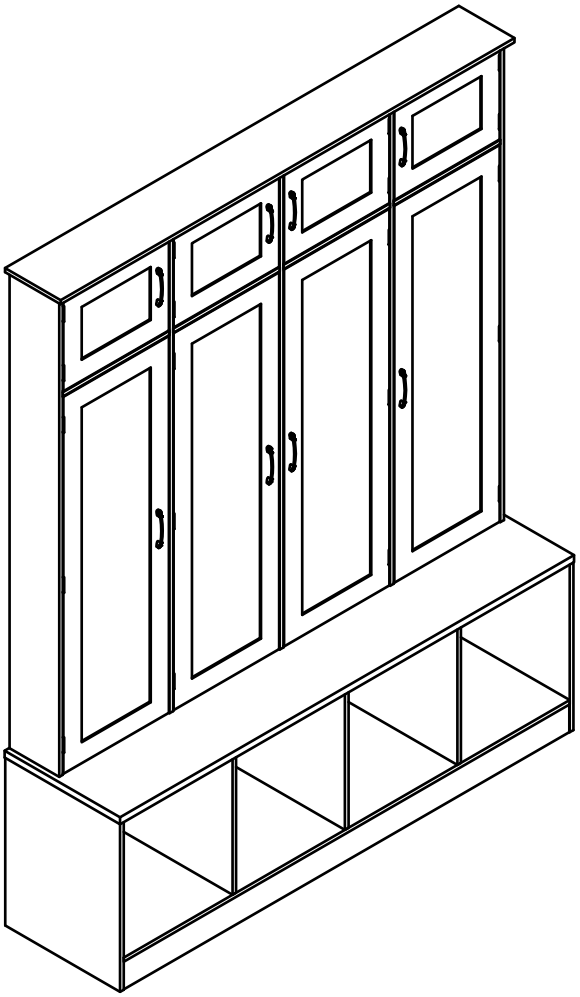

This is the original instruction, please read all manual instructions carefully before operating. VEVOR reserves a clear interpretation of our user manual. The appearance of the product shall be subject to the product you received. Please forgive us that we won't inform you again if there are any technology or software updates on our product.

SAFETY INSTRUCTIONS

WARNING:
Read this material before using this product. Failure to do so may result in serious injury.

Assembly precautions

1. Assemble only according to these instructions. Improper assembly may create hazards.
2. Wear ANSI-approved safety goggles and heavy-duty work gloves during assembly.
3. Keep the assembly area clean and well-lit.
4. Keep bystanders out of the area during assembly.
5. Do not assemble if tired or when under the influence of alcohol, drugs or medication.
6. The product capabilities apply to properly and completely assembled products only.
7. Assemble on a flat, level, hard and smooth surface capable of safely supporting the Reception Desk.
8. For additional information regarding the parts listed in the following pages, please refer to the Assembly Diagram of this manual. Unwrap and separate all parts in a clean work area.

Use precautions

1. DO NOT SIT OR STAND ON THIS ITEM.

2 The product complies with relevant standards and regulations. Installation of this device must comply with all applicable regulations, and it should only be operated in well-ventilated areas. Please read the user manual before installing and using this equipment.

3 This appliance is not intended for use by persons (including children) with reduced physical, sensory or mental capabilities, or lack of experience and knowledge, unless they have been given supervision or instruction concerning use of the appliance by a person responsible for their safety.

4 Children shall not play with the appliance.

5 This appliance shall not be used by children. Keep the appliance out of reach of children.

6 This appliance is intended to be used in household and similar applications such as:

– staff kitchen areas in shops, offices and other working environments;
– farm houses;
– by clients in hotels, motels and other residential type environments;
– bed and breakfast type environments.

7 Please properly keep product. Check whether the product is abnormal before use. If it is abnormal, please stop using it.

8 Please use the product according to the intended use, warn of potential injury from misuse.

SAVE THIS MANUAL

Installation of Cams and Pins

Screw the pin into the hole. To set the cams correctly, ensure that the arrow on the cam is opening to the hole of the pin it is locking. Lock the cam by turning the cam head with a screwdriver until it is tightened. Please do not use an electric screwdriver to assemble the unit.

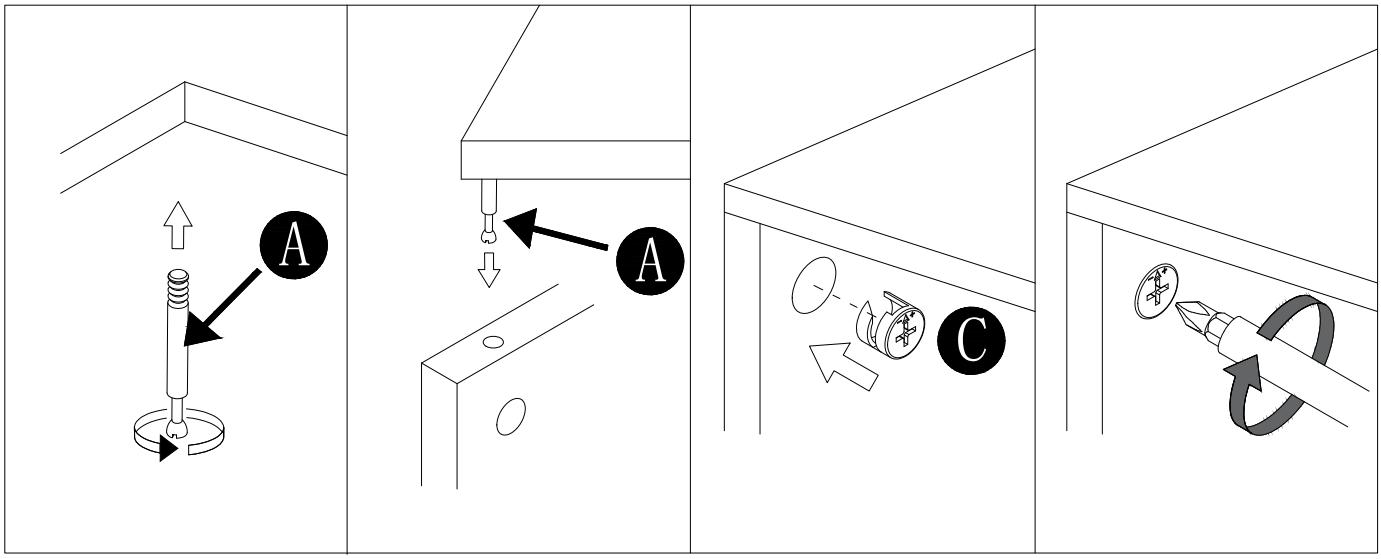

Read each step carefully before starting. It is very important that each step of instruction is performed in the correct order. If these steps are not followed in sequence, assembly difficulties will occur.

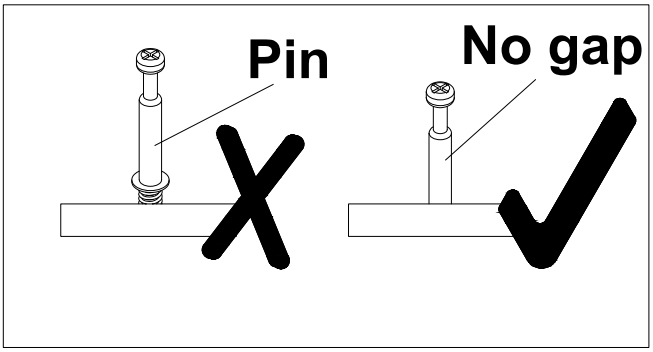

Parts & Hardware List

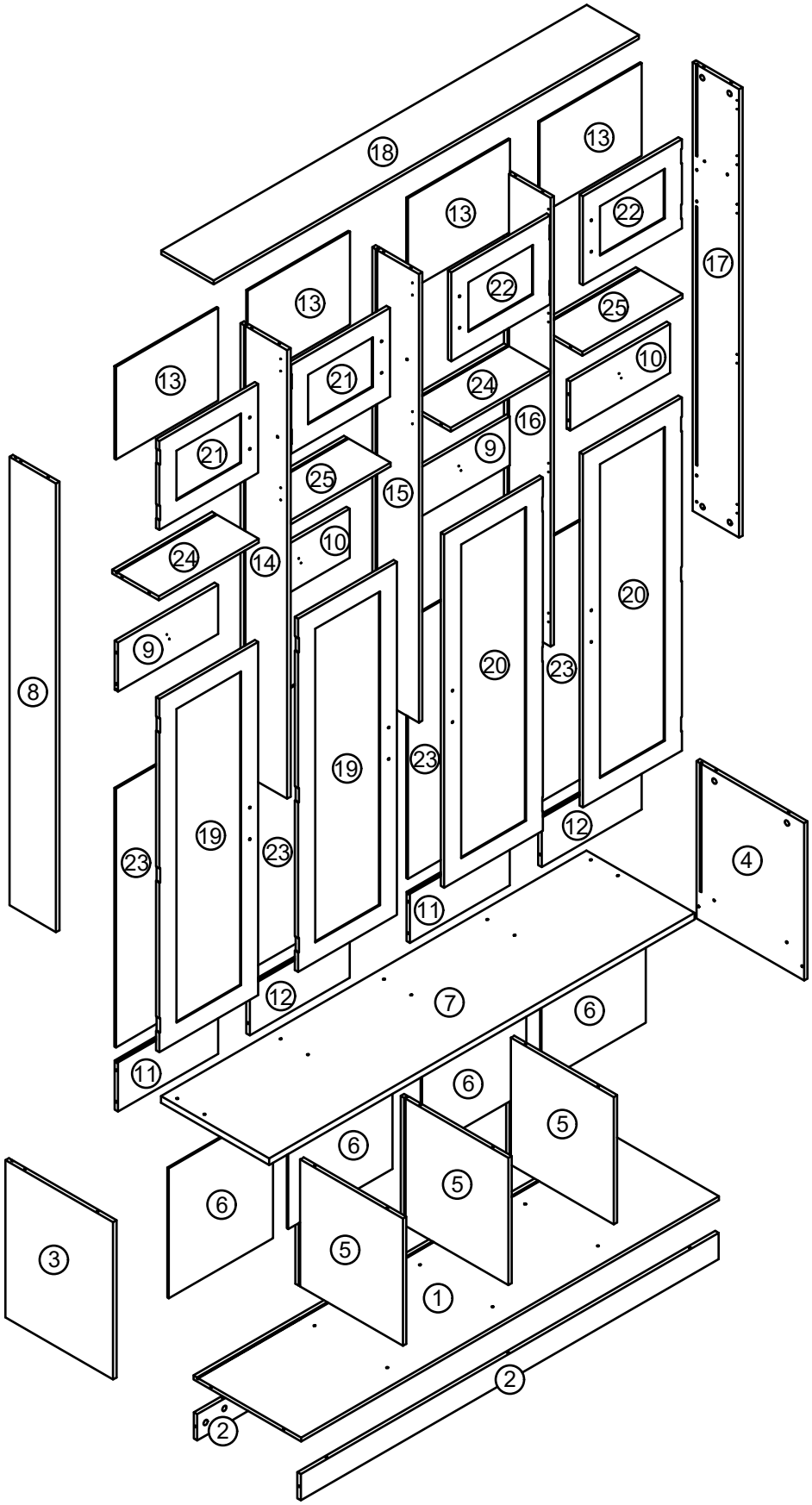

Parts & Hardware List

1 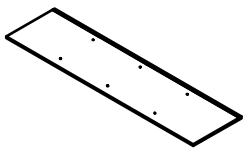 x1	2 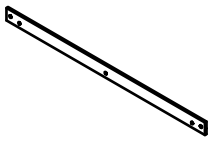 x2	3 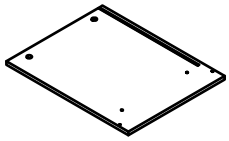 x1	4 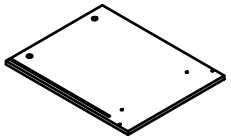 x1
5 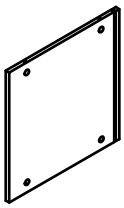 x3	6 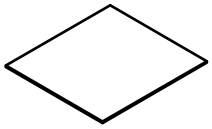 x4	7 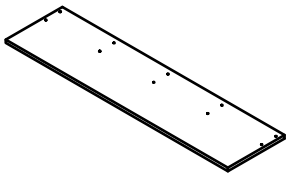 x1	8 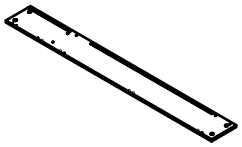 x1
9 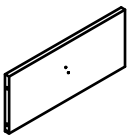 x2	10 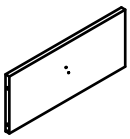 x2	11 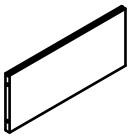 x2	12 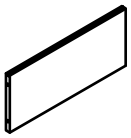 x2
13 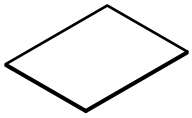 x4	14 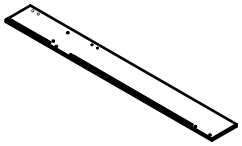 x1	15 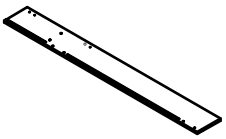 x1	16 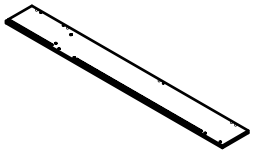 x1
17 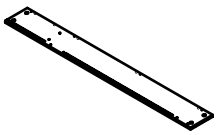 x1	18 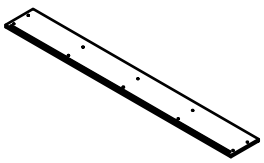 x1	19 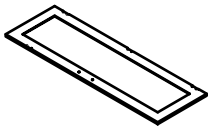 x2	20 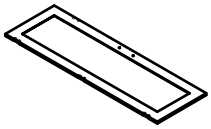 x2
21 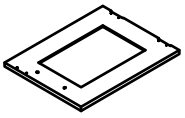 x2	22 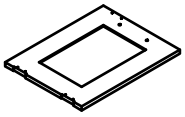 x2	23 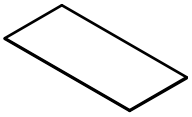 x4	24 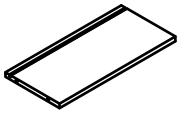 x2	25 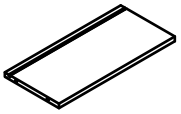 x2

Parts & Hardware List

A 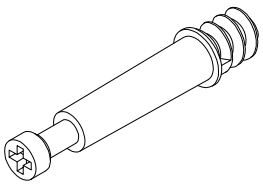 x98	B 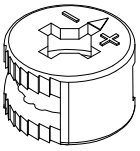 x98	C 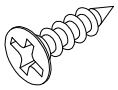 x144	D  x4
E 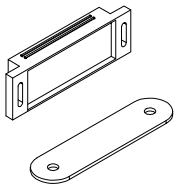 x8	F 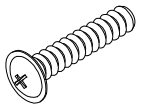 x16	G 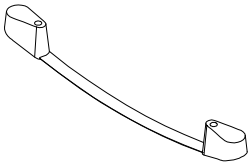 x8	H 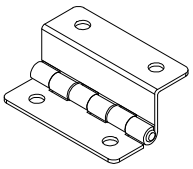 x20
I 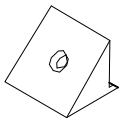 x40	J 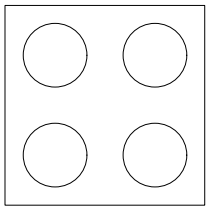 x98	K 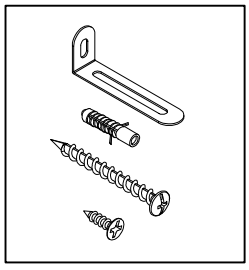 x2	L 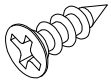 x16
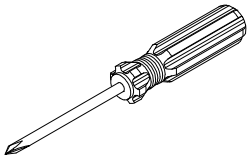 x1			

Instructions

1

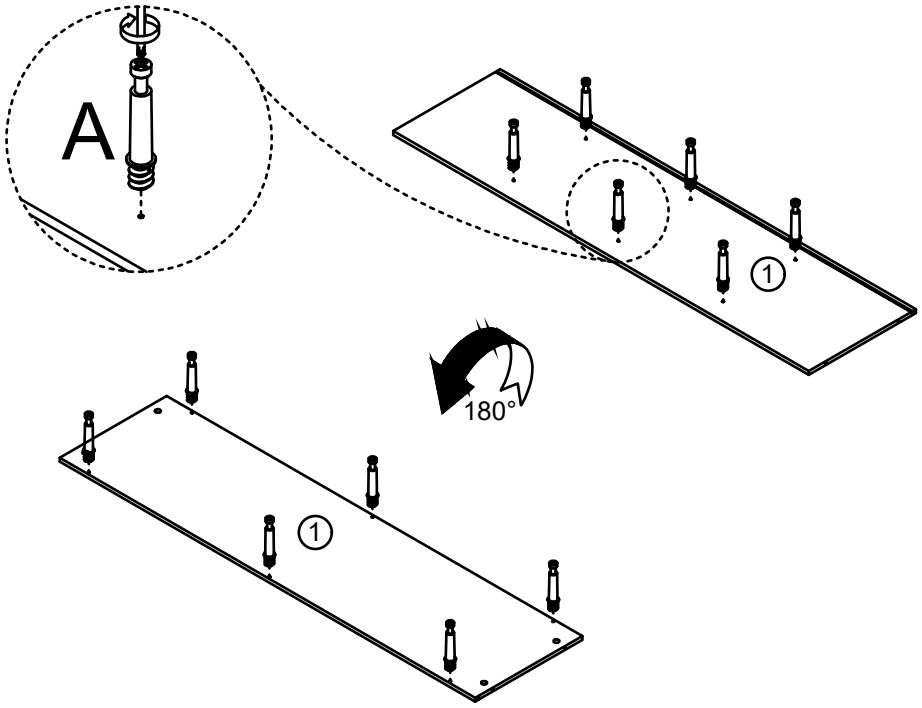

① 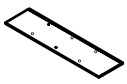	x1
A 	x12

2

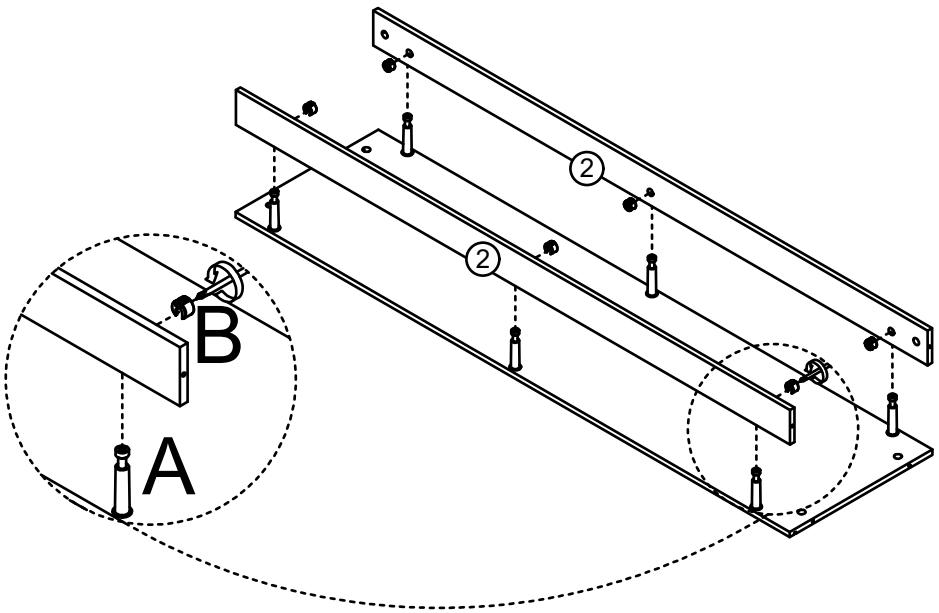

② 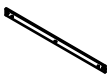	x2
B 	x6

3

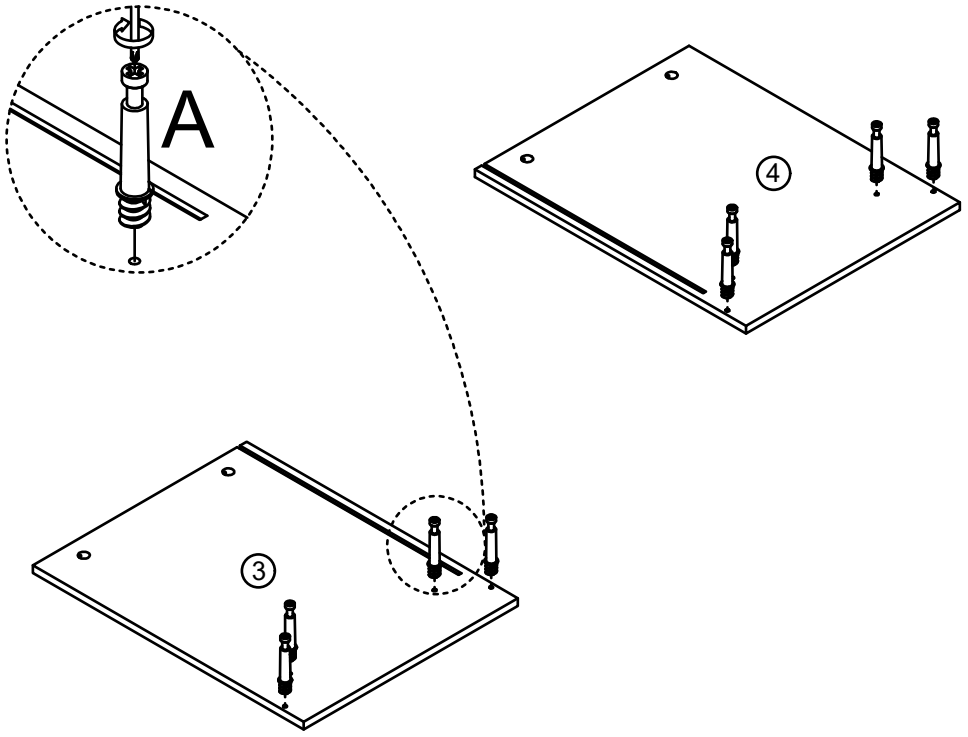

③ 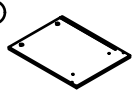	x1
④ 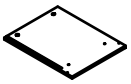	x1
A 	x8

4

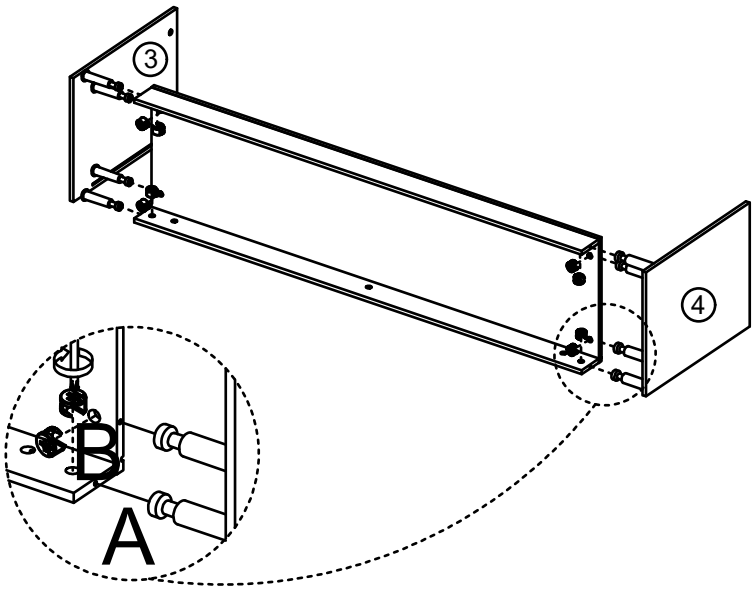

B 	x8

5

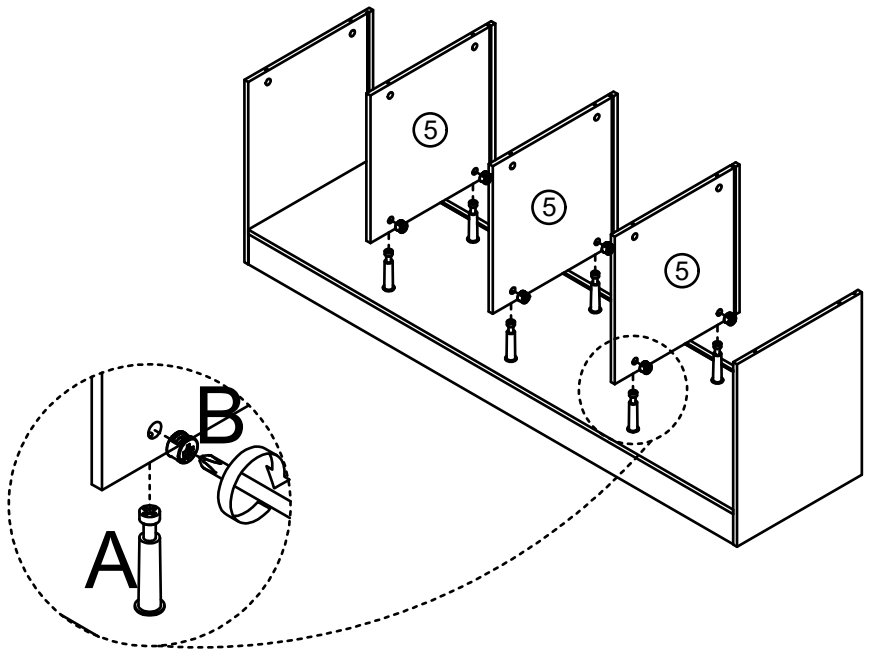

⑤ 	x3
B 	x6

6

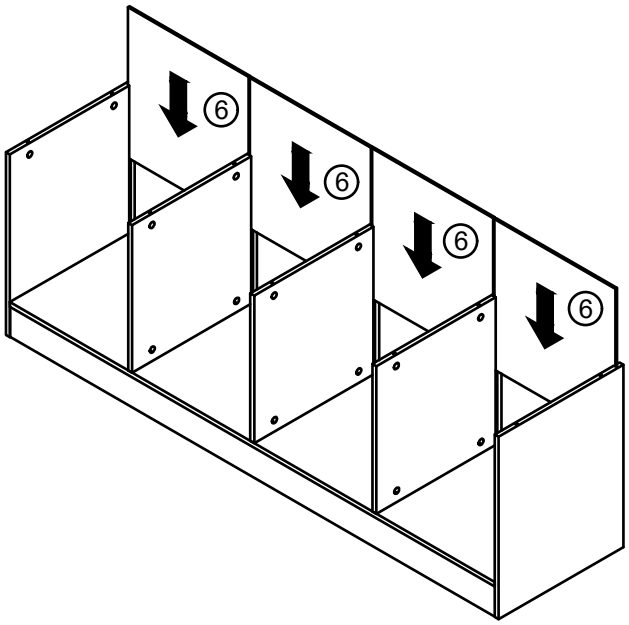

⑥ 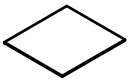	x4

7

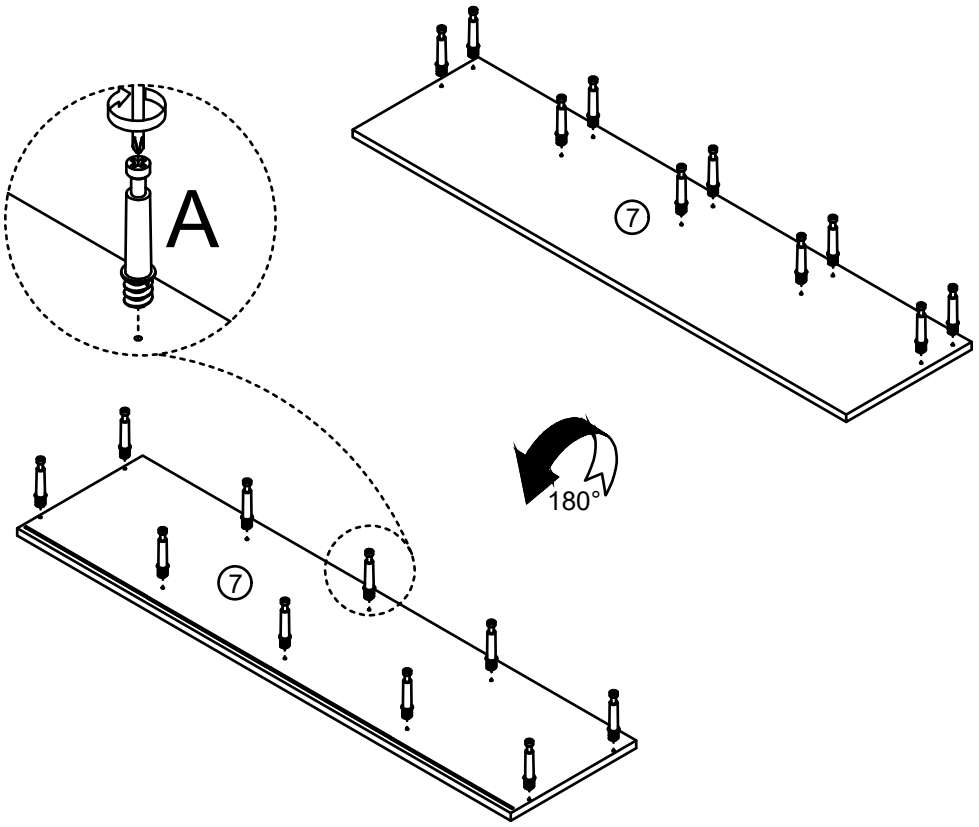

⑦ 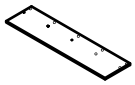	x1
A 	x20

8

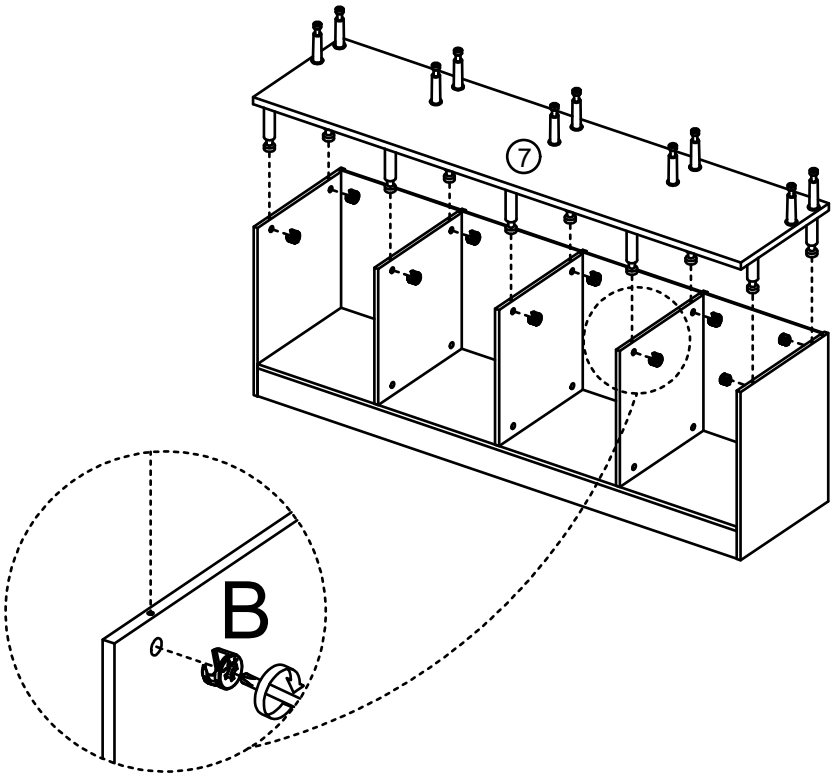

B 	x10

9

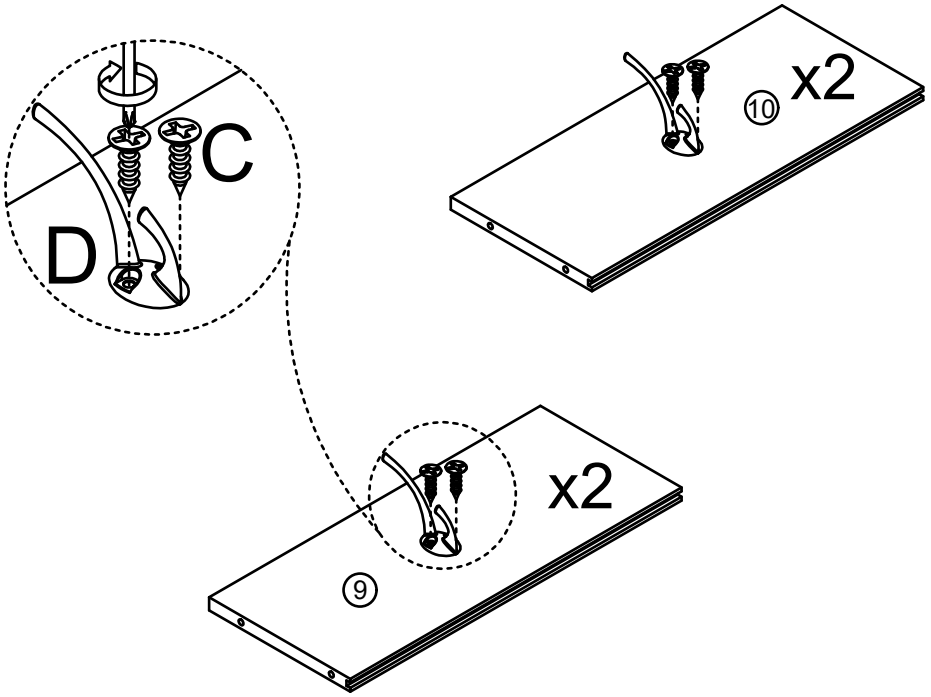

⑨	x2
⑩	x2
C	x8
D	x4

10

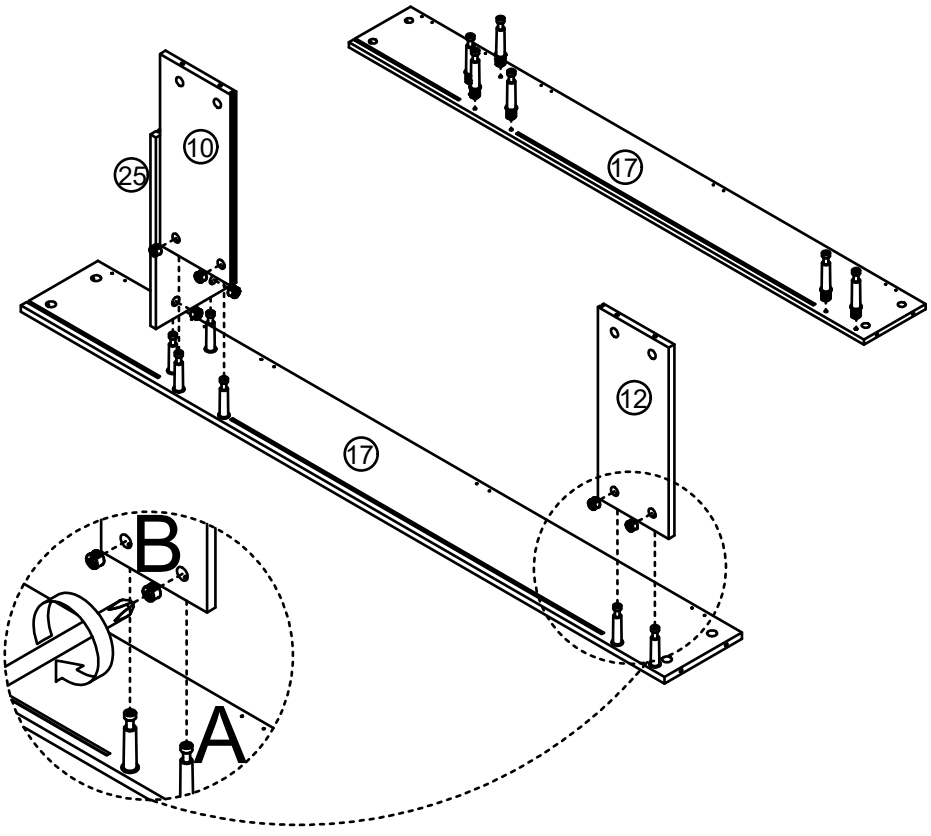

⑰	x1
⑩	x1
⑫	x1
25	x1
A	x6
B	x6

11

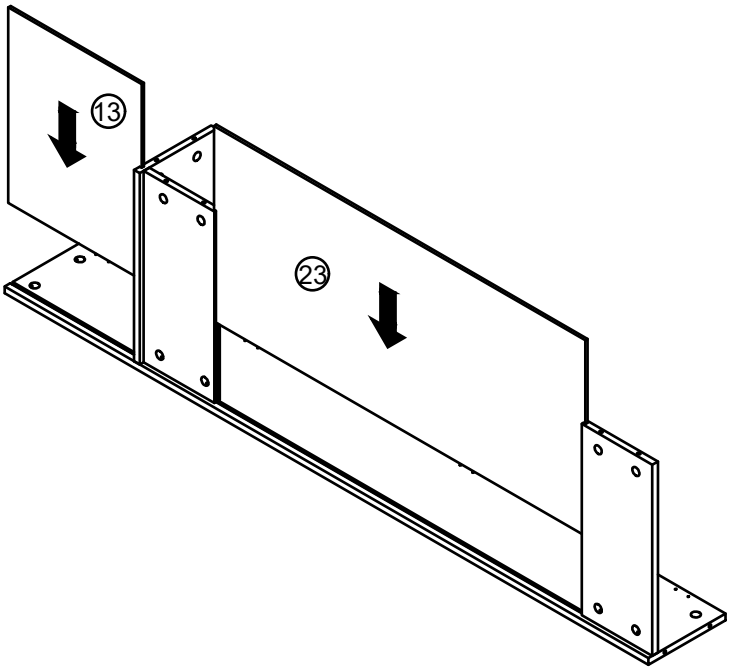

⑬ 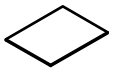	x1
㉓ 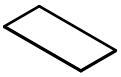	x1

12

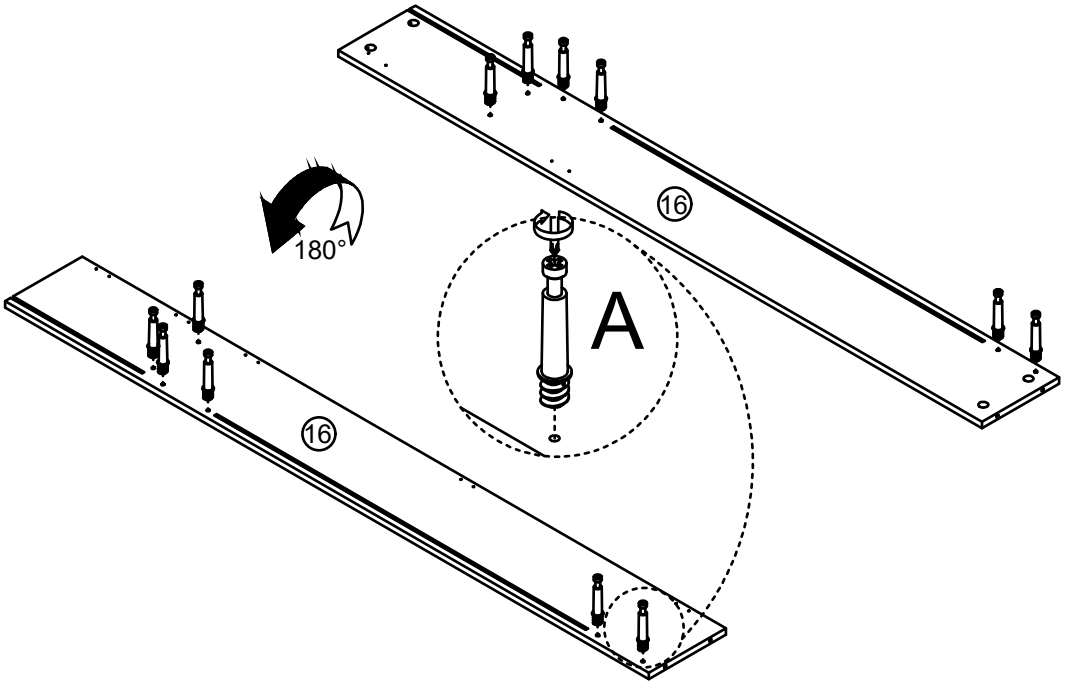

⑯	x1
A 	x12

13

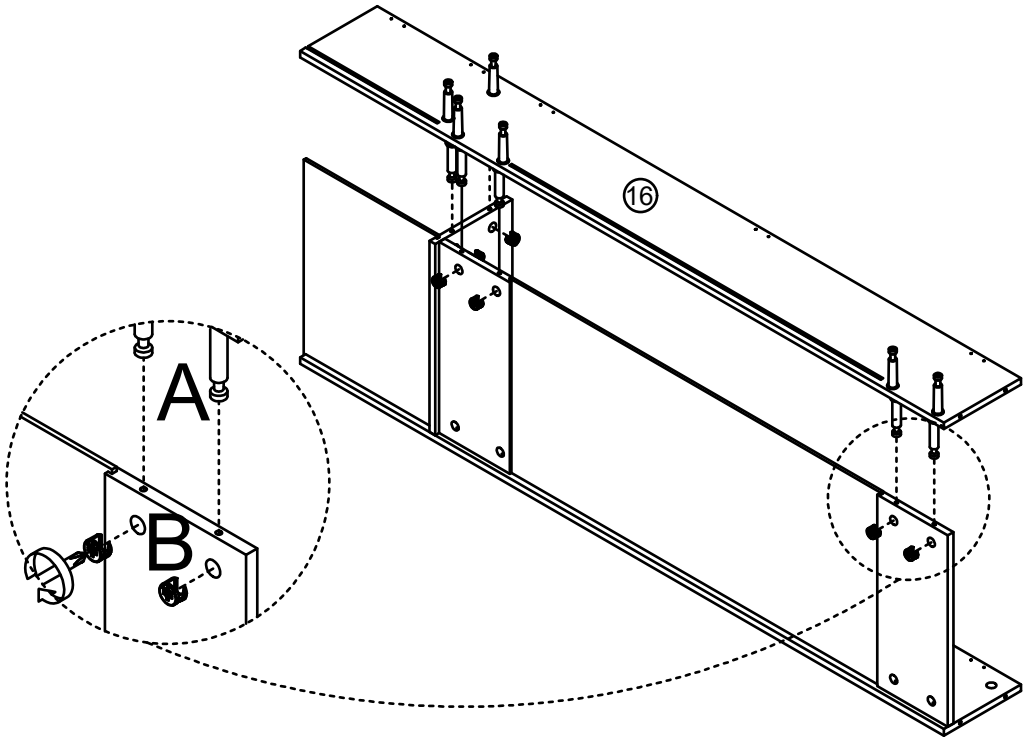

B 	x6

14

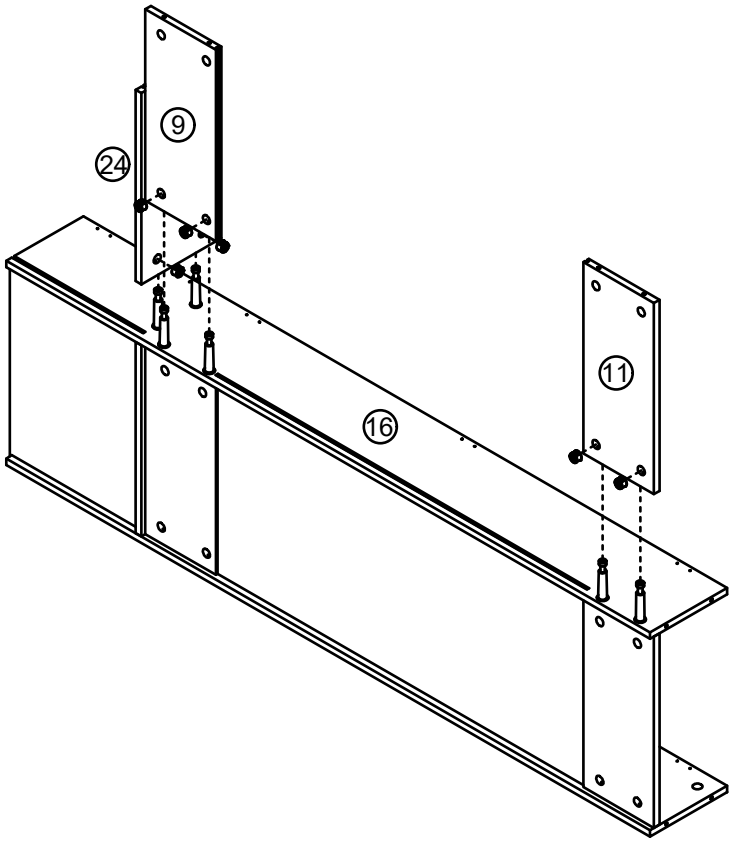

⑨ 	x1
⑪ 	x1
㉔ 	x1
B 	x6

15

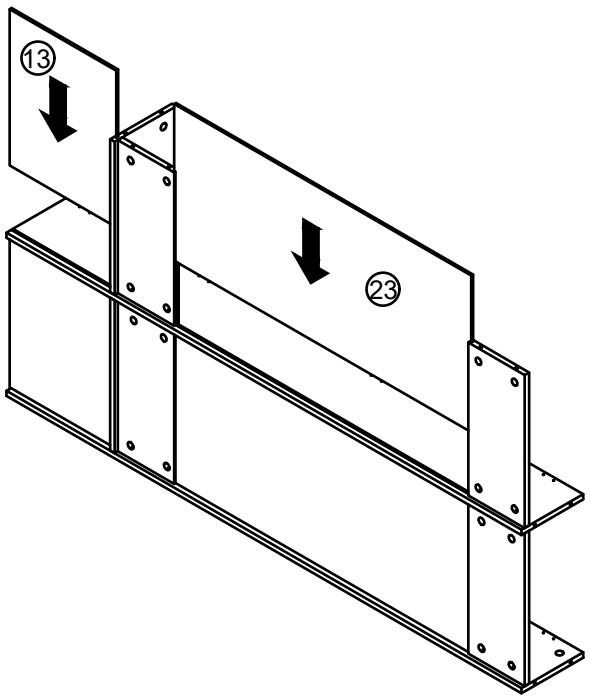

12 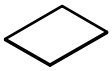	x1
23 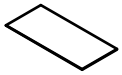	x1

16

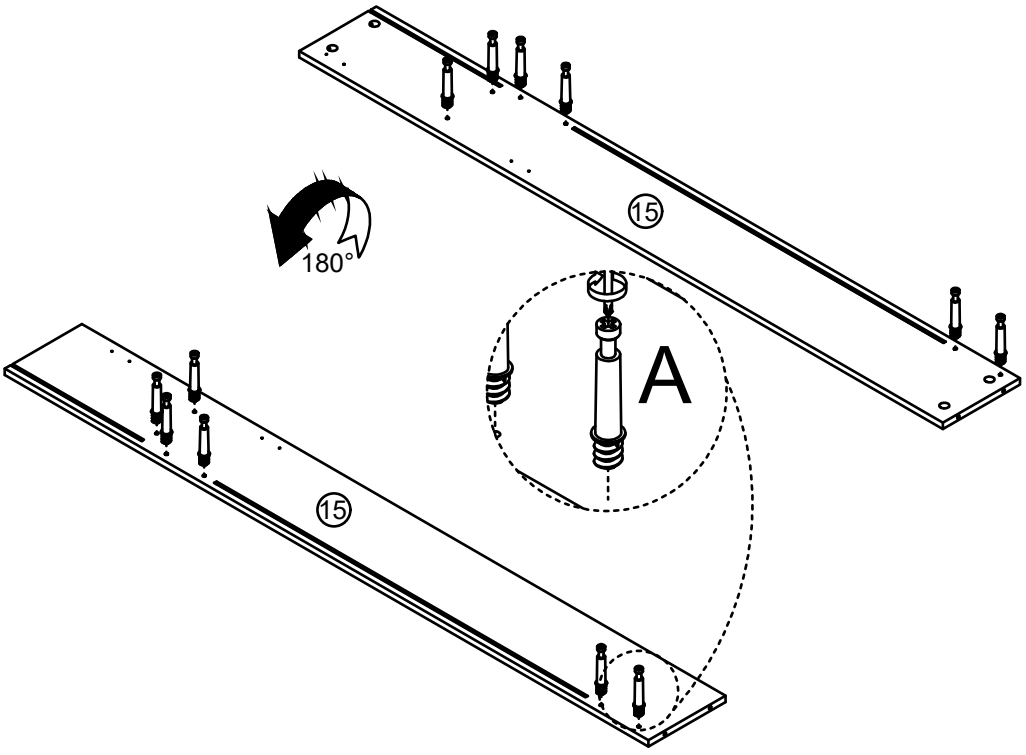

15 	x1
A 	x12

17

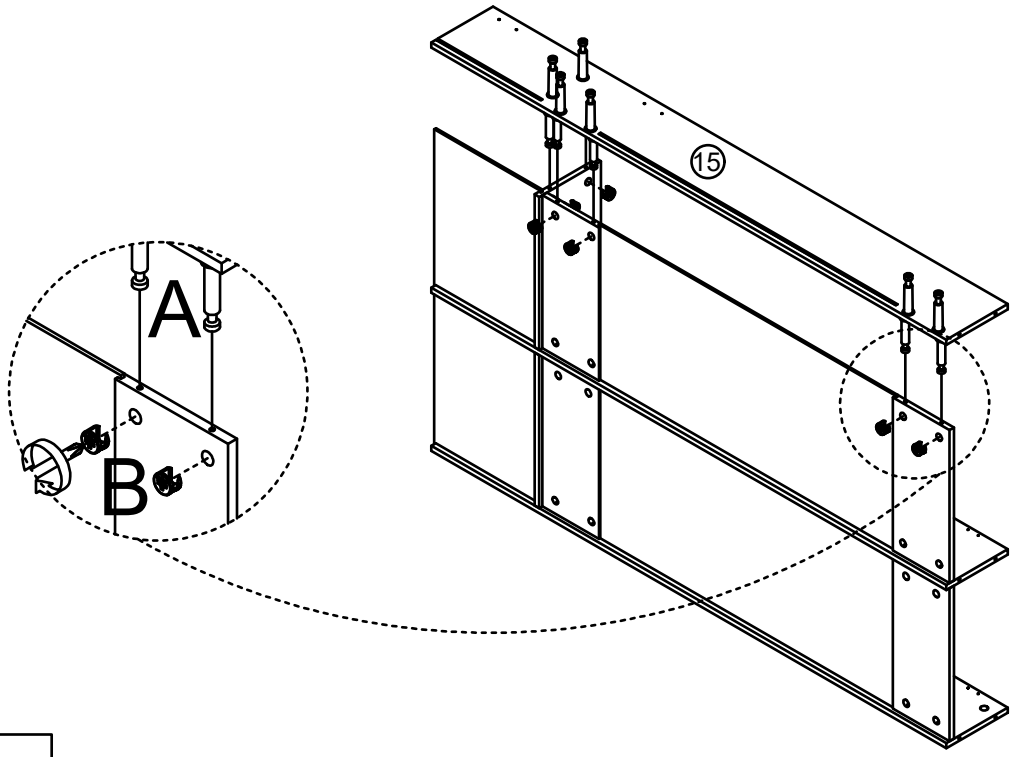

B 	x6

18

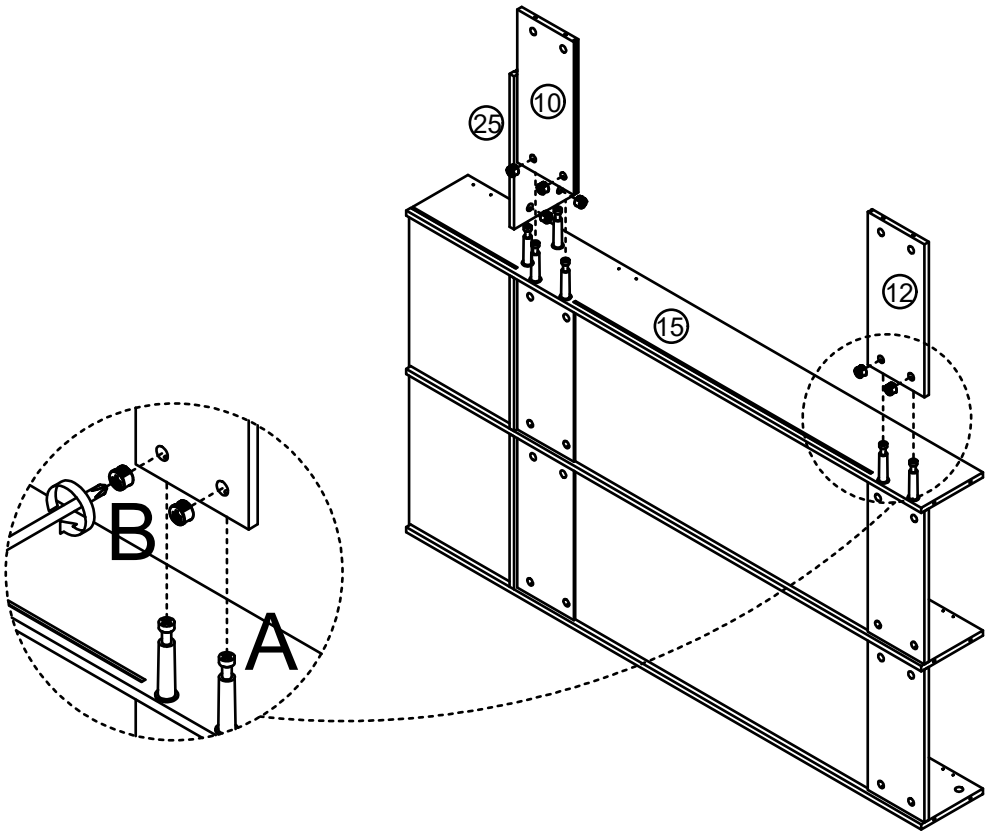

10 	x1
12 	x1
25 	x1
B 	x6

19

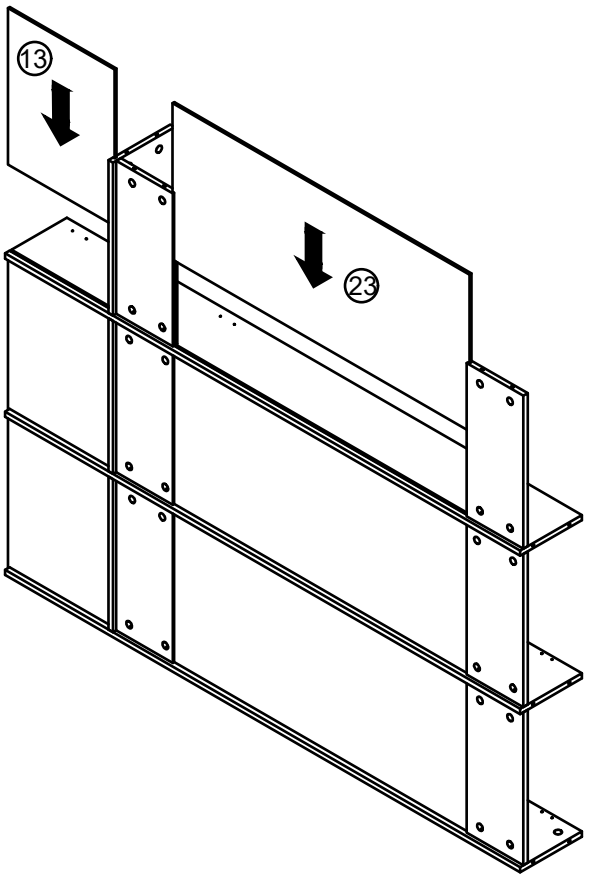

13 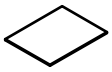	x1
23 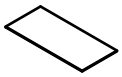	x1

20

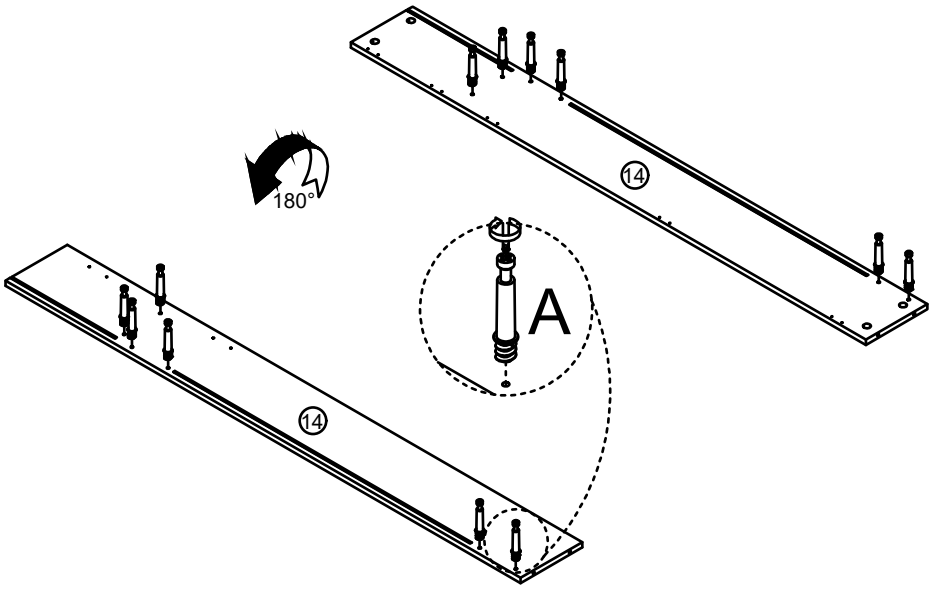

14 	x1
A 	x12

21

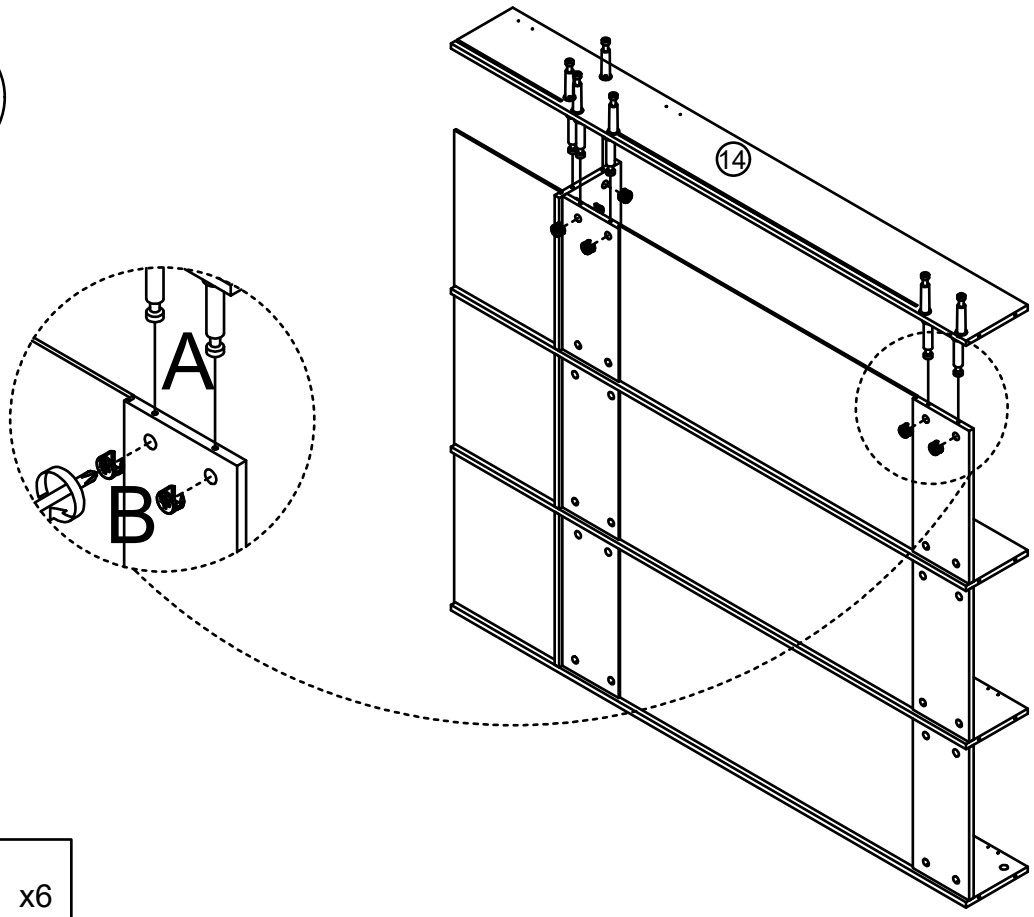

B 	x6

22

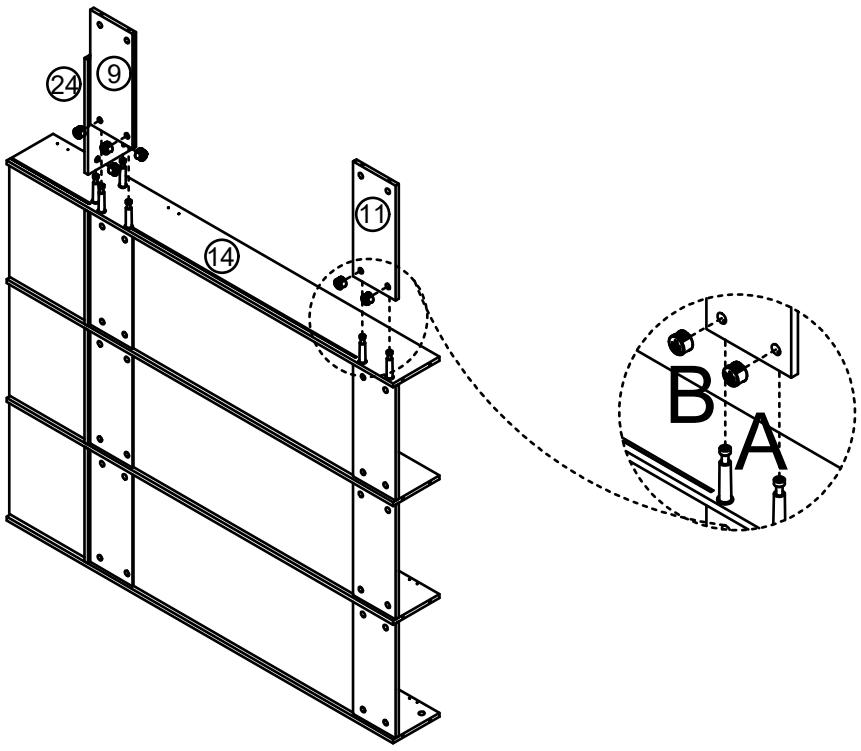

9 	x1
11 	x1
24 	x1
B 	x6

23

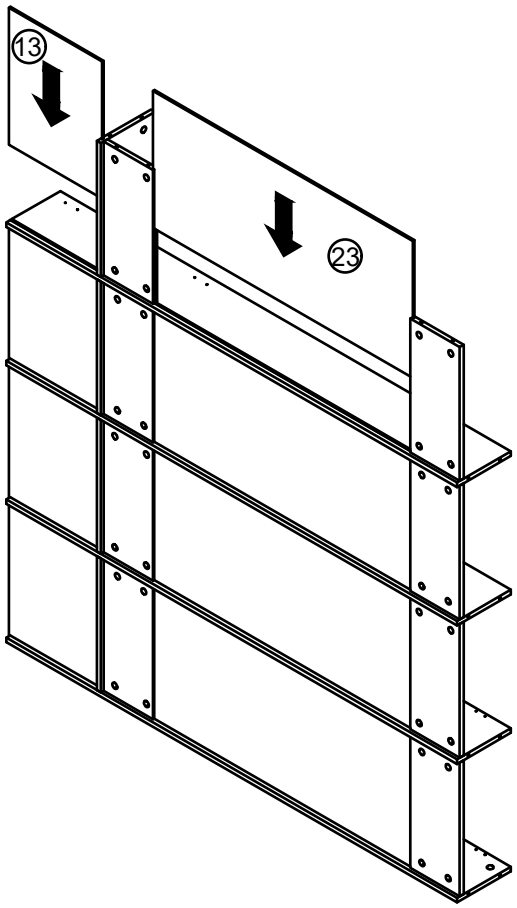

13 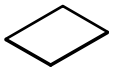	x1
23 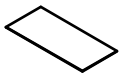	x1

24

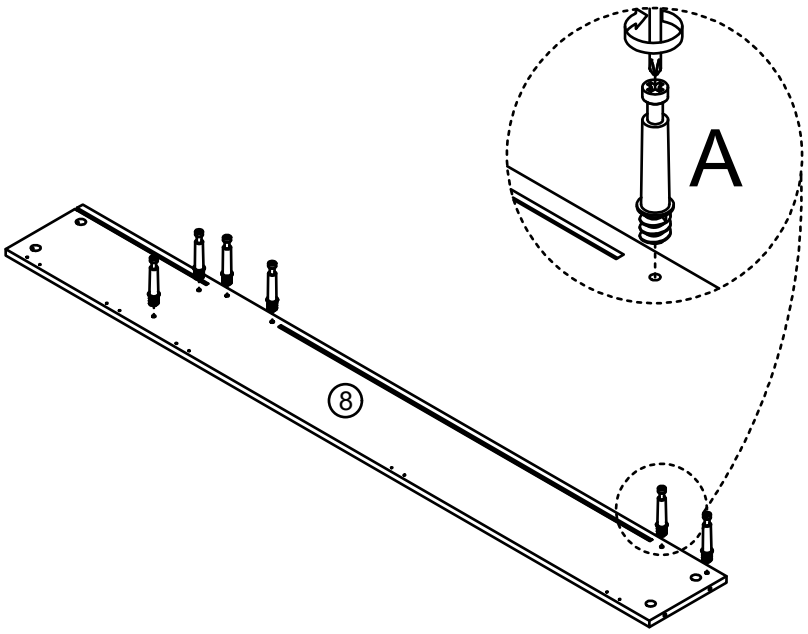

8 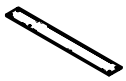	x1
A 	x6

25

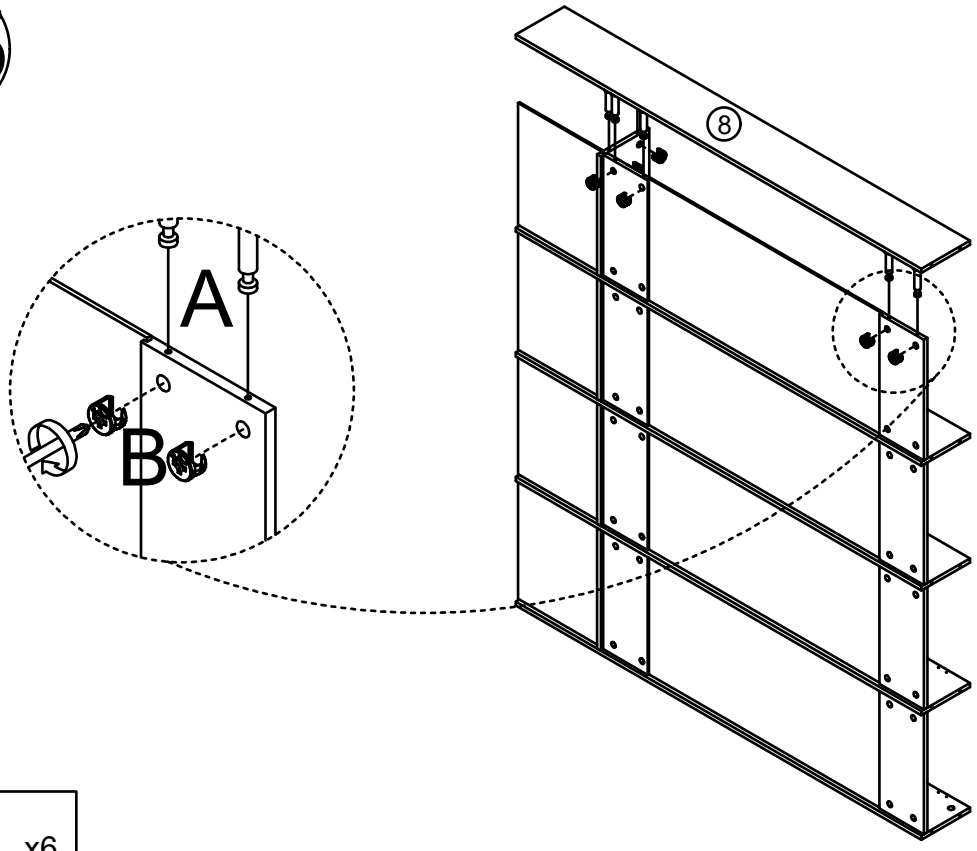

B 	x6

26

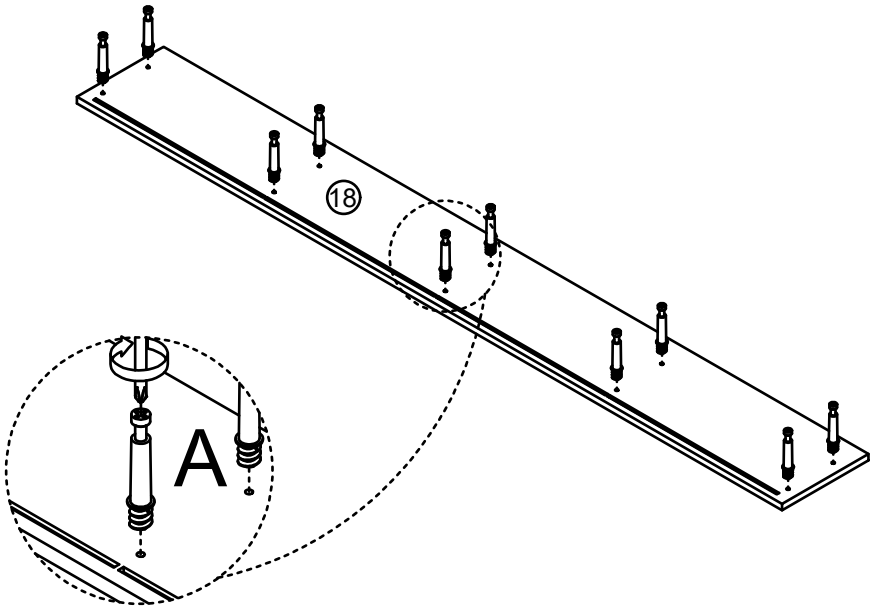

18 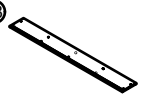	x1
A 	x10

27

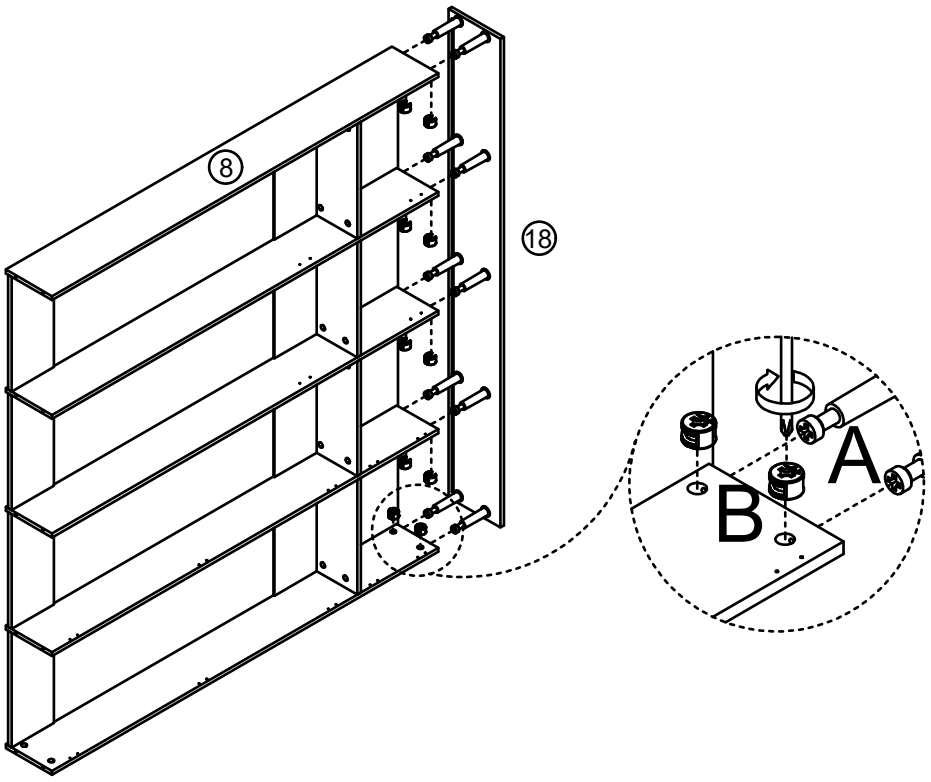

B 	x10

28

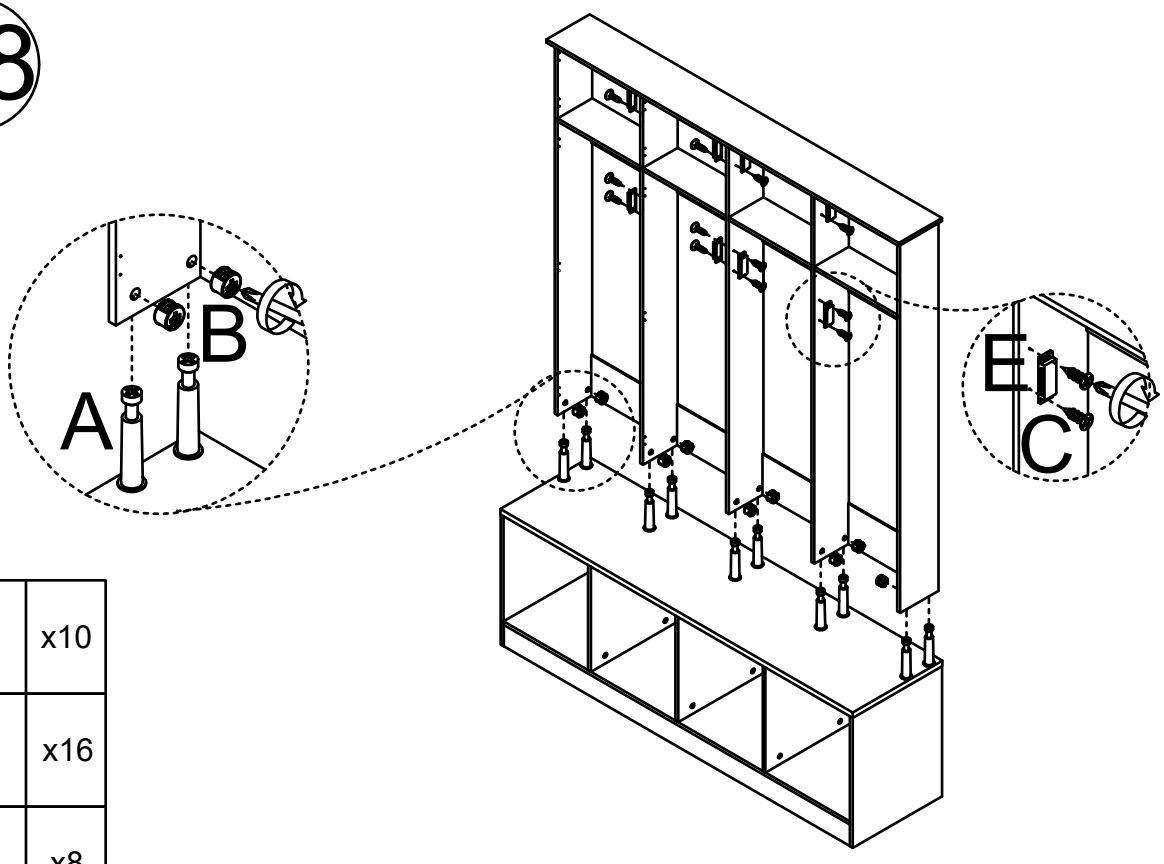

B 	x10
C 	x16
E 	x8

29

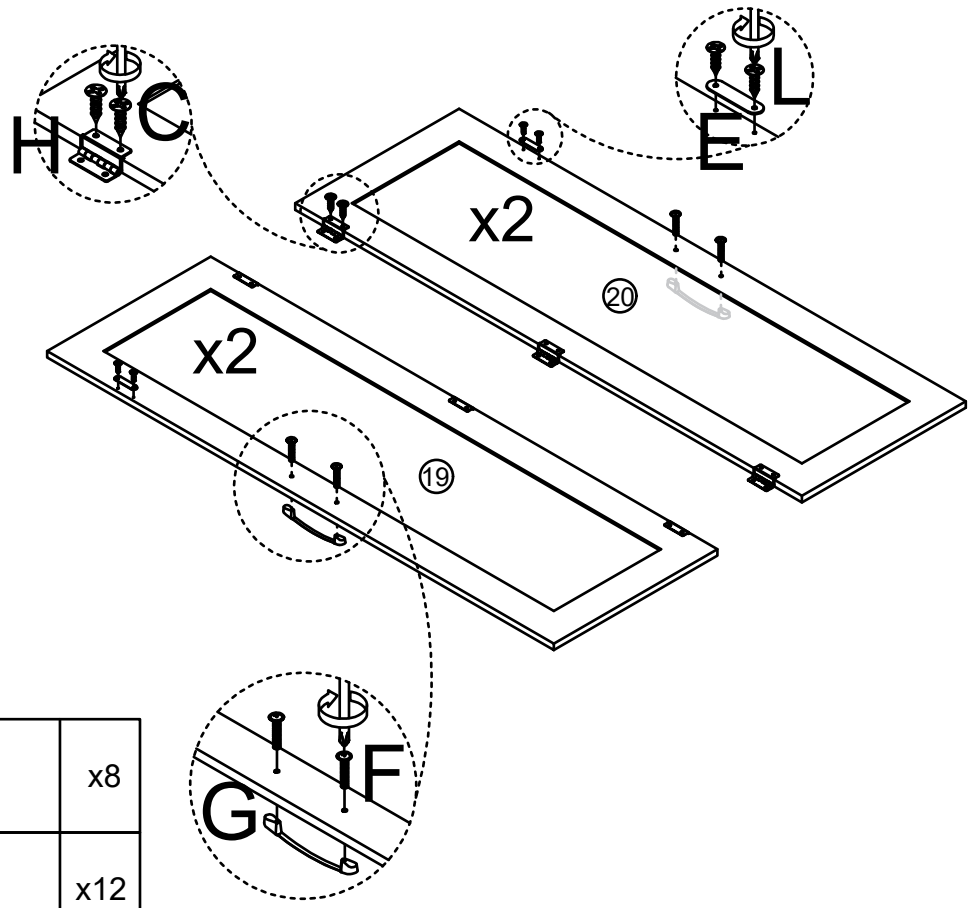

⑲	x2		
⑳	x2		
C	x24		
E	x4		
F	x8	L	x8
G	x4	H	x12

30

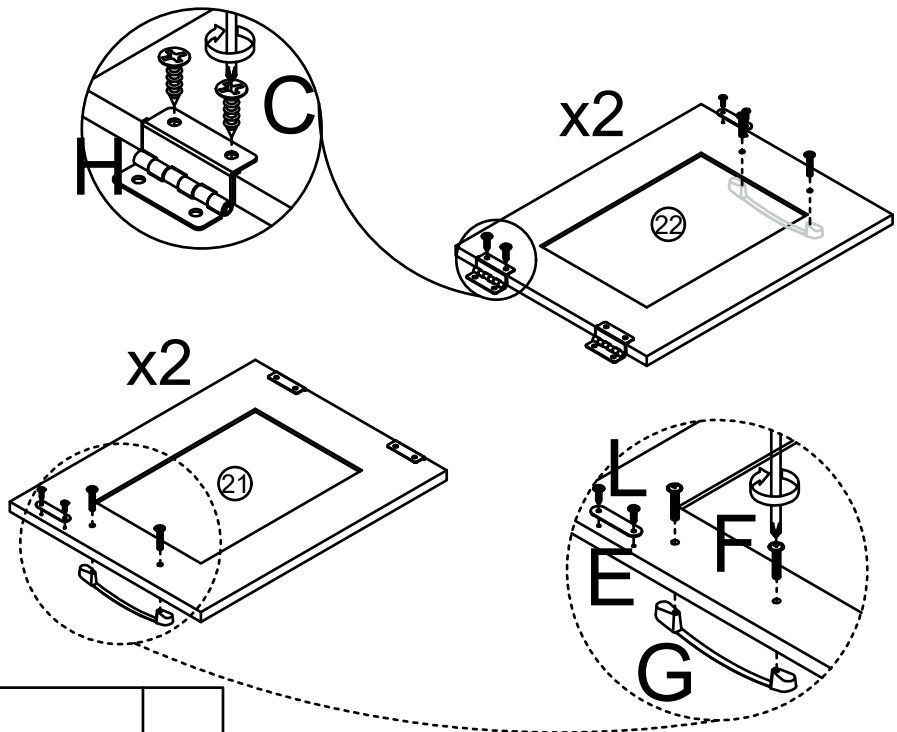

㉑	x2		
㉒	x2		
C	x16		
E	x4		
F	x8	L	x8
G	x4	H	x8

31

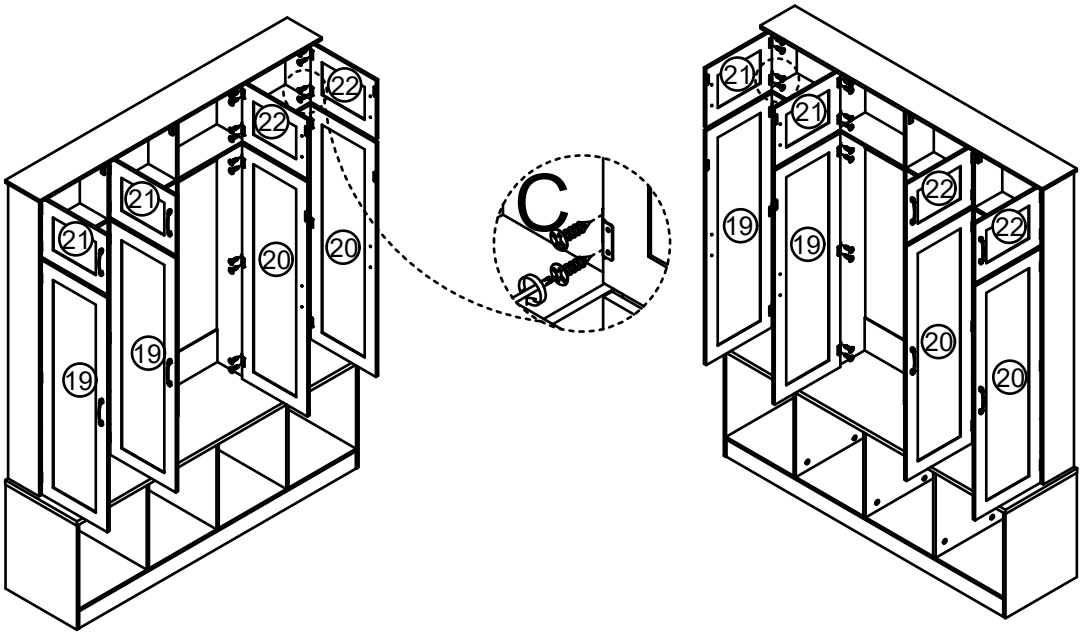

C 	x40

32

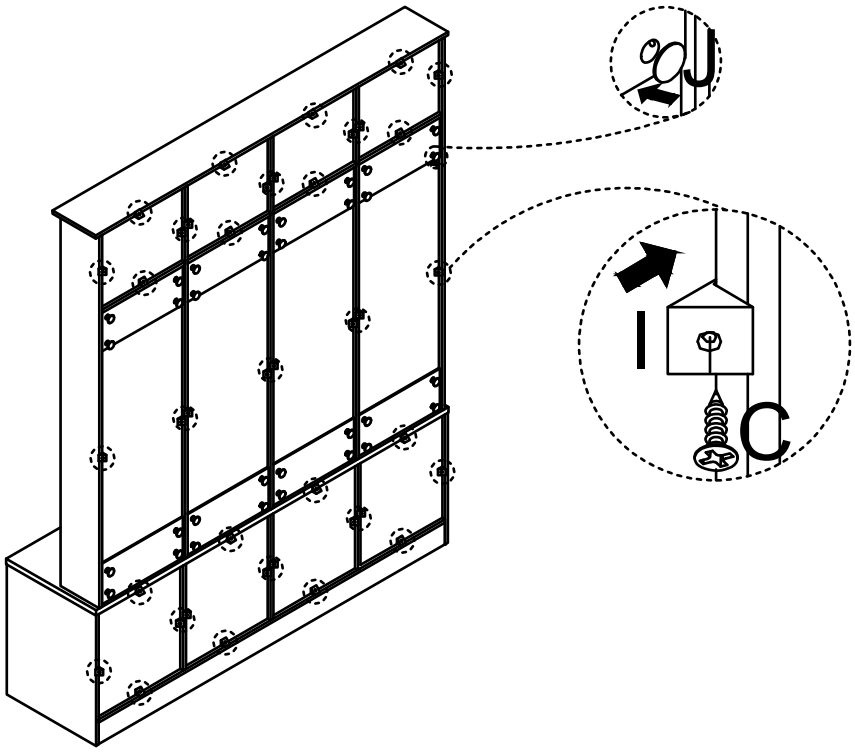

C 	x40
I 	x40
J 	x98

33

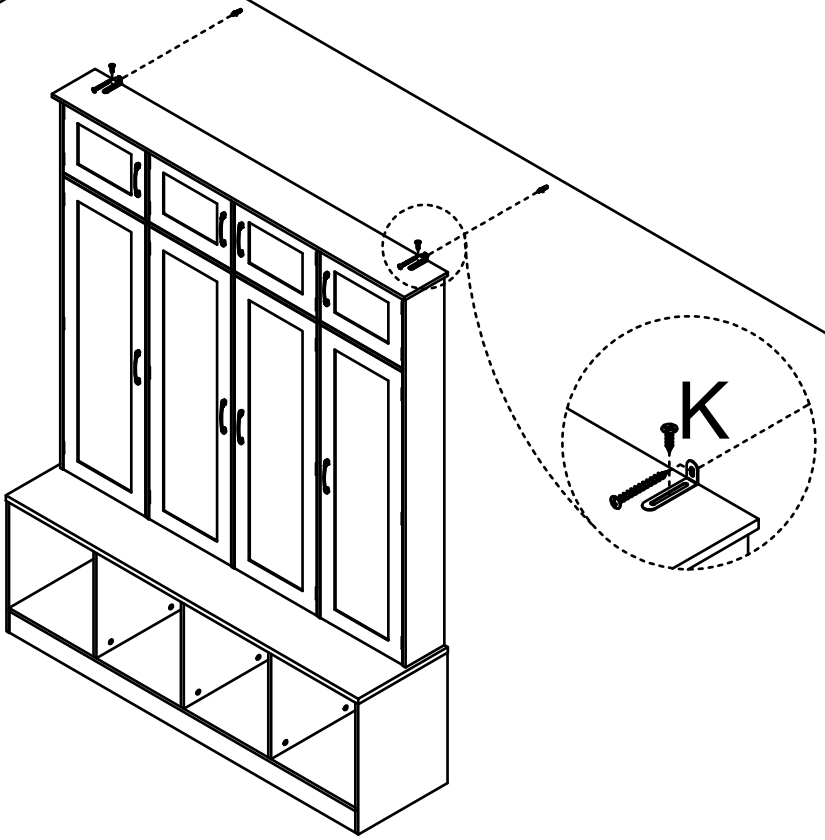

K		x2

PRODUCT PARAMETER

Model	ZD-XM02
Colour	Main body: White; Seat board: Wooden color;
Product Size	1495×380×1871mm

