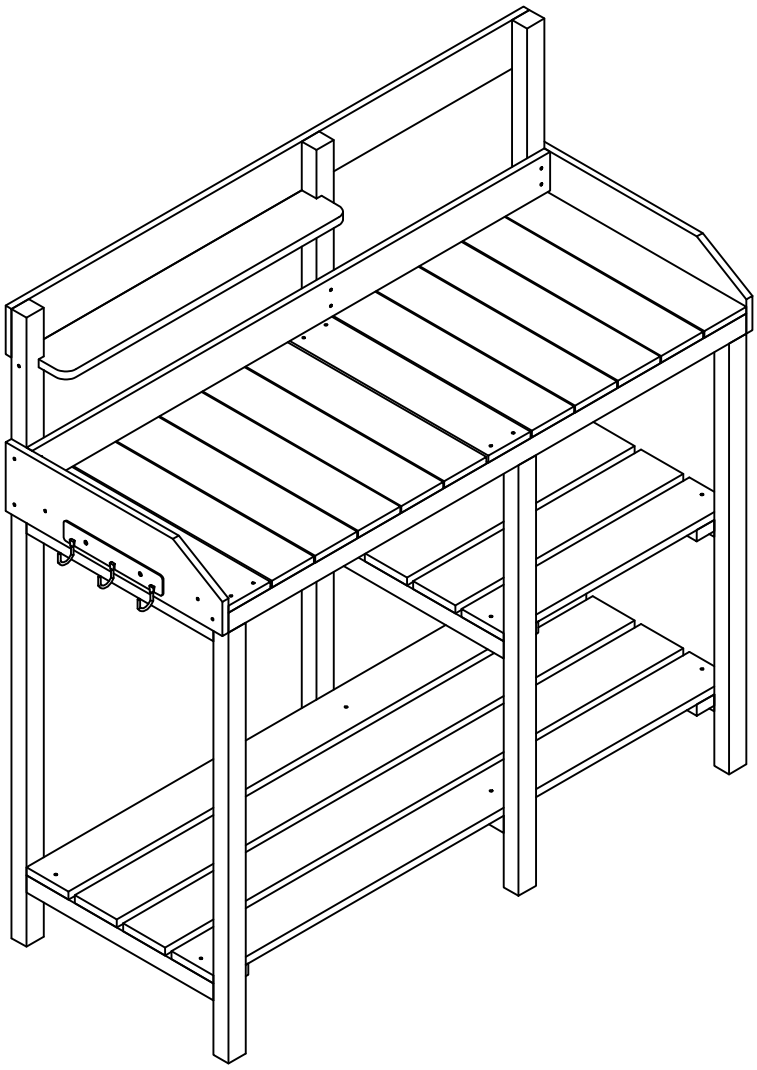

INSTRUCTION MANUAL

Garden Potting Bench

NOTICE

Please retain these instructions for future reference.

- Please do not exceed the weight limitations of this item.
- Do not stand on or use any part of this item as a step ladder.
- Firmly secure all bolts, screws and knobs before use.
- Reconfirm that all bolts, screws, and knobs are secure every 90 days.
- Fasten screws loosely during initial assembly. Do not firmly tighten the screws until the item is completely assembled.
- Do not use or store this item in the proximity of open flame or flammable/combustible chemicals.
- Be aware that some parts are heavy and have sharp edges.
- If any parts are missing, broken, damaged, or worn, stop using this product until repairs are made and/or factory replacement parts are installed.
- Check all parts are present before you start to assemble the product. Place small parts on a tray or similar to ensure they are not lost.

The manufacturing process can very occasionally result in sharp edges/waste material so please take care when assembling this product.

- Ensure your product is sited on level ground. Failure to do this may put additional stress on connections and joints and in time could cause them to fail.
- In high winds, moved to a sheltered position and/or securely staked down.

About Our Wood

Our products uses only premium lumber,
ensuring the safest product for your use. Although we take great care in selecting the best quality lumber available, wood is still a product of nature and susceptible to weathering which can change the appearance of your set.

What causes weathering? Does it affect the strength of my products?

One of the main reasons for weathering is the effects of water (moisture); the moisture content of the wood at the surface is different than the interior of the wood.As the climate changes, moisture moves in or out of the wood, causing tension which can result in checking and or warping.You can expect the following due to weathering.These changes will not affect the strength of the product:

1. Checking is surface cracks in the wood along the grain.

2. Warping results from any distortion (twisting, cupping) from the original plane of the board and often happens from rapid wetting and drying of the wood.

3. Fading happens as a natural change in the wood color as it is exposed to sun-light and will turn a grey over time.

How can I reduce the amount of weathering to my products ?

Sunlight will break down the wood or coating, applying a water repellant or stain on a yearly basis is important maintenance. (see your local stain and paint supplier for a recommended product)

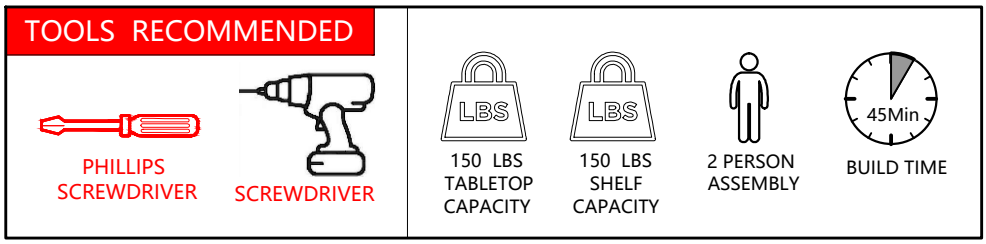

PARTS

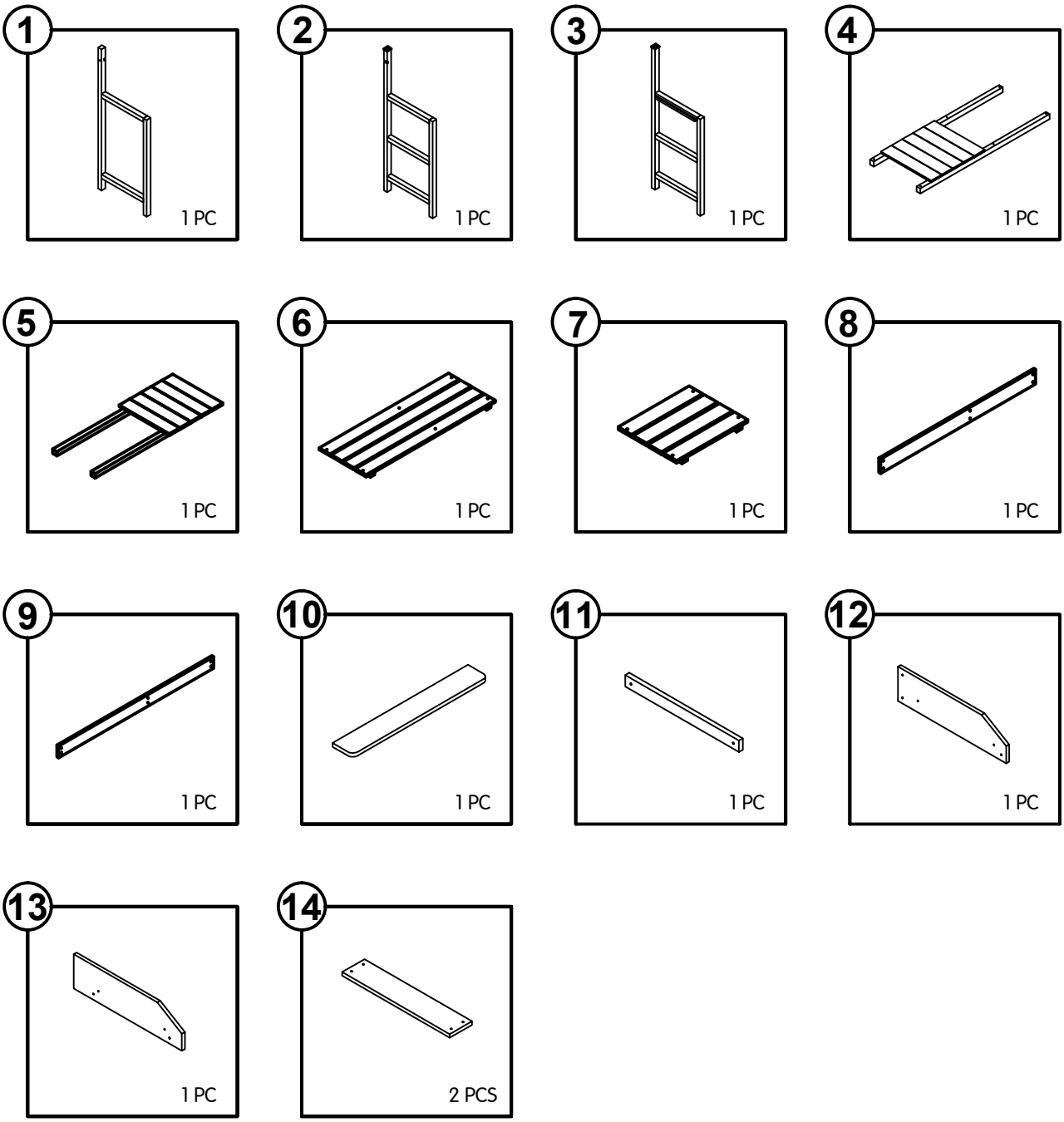

HARDWARE

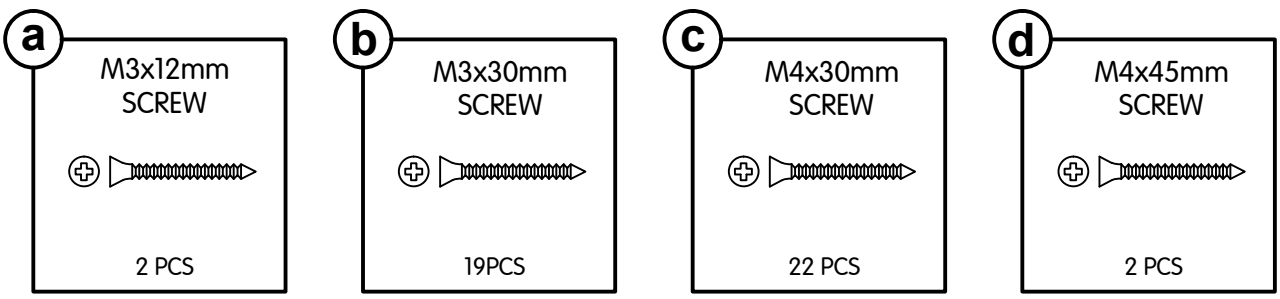

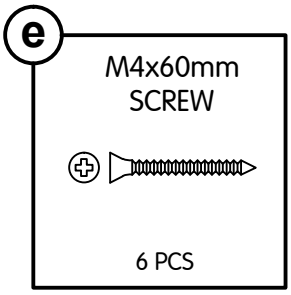

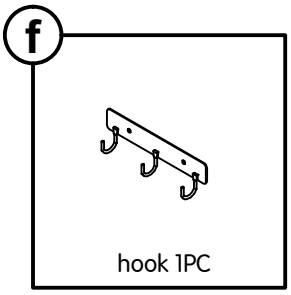

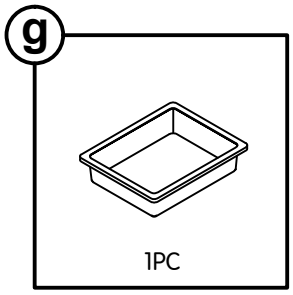

Note:To Save installation time,It's Reconmend to identify Compoments before assembly!

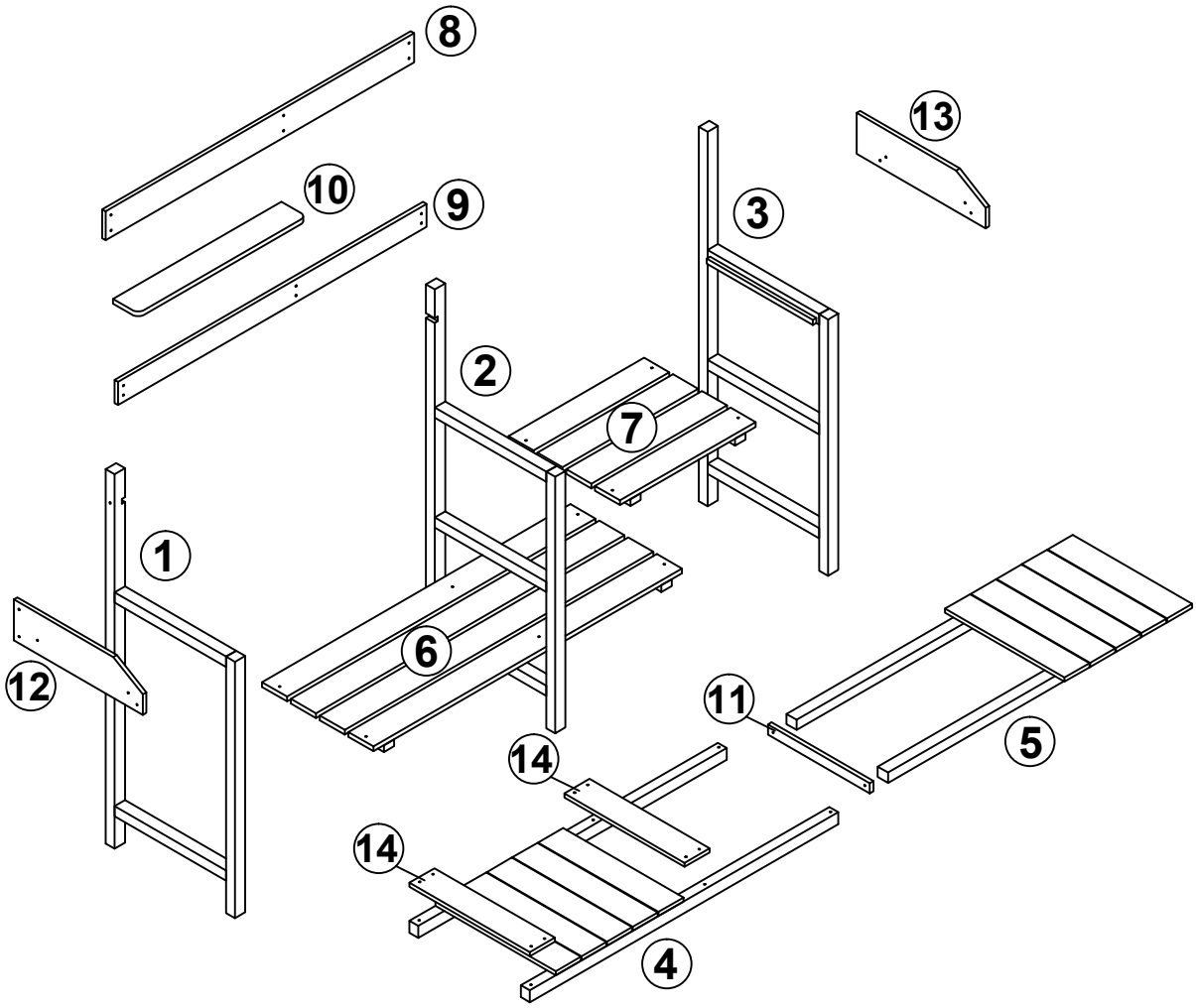

1

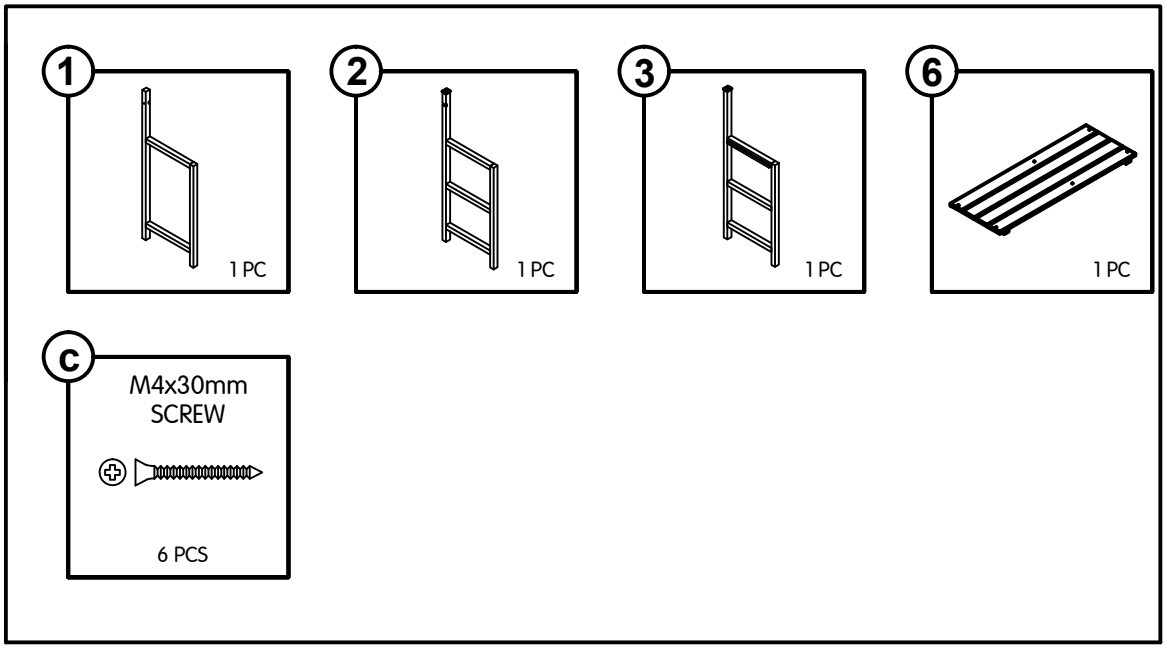

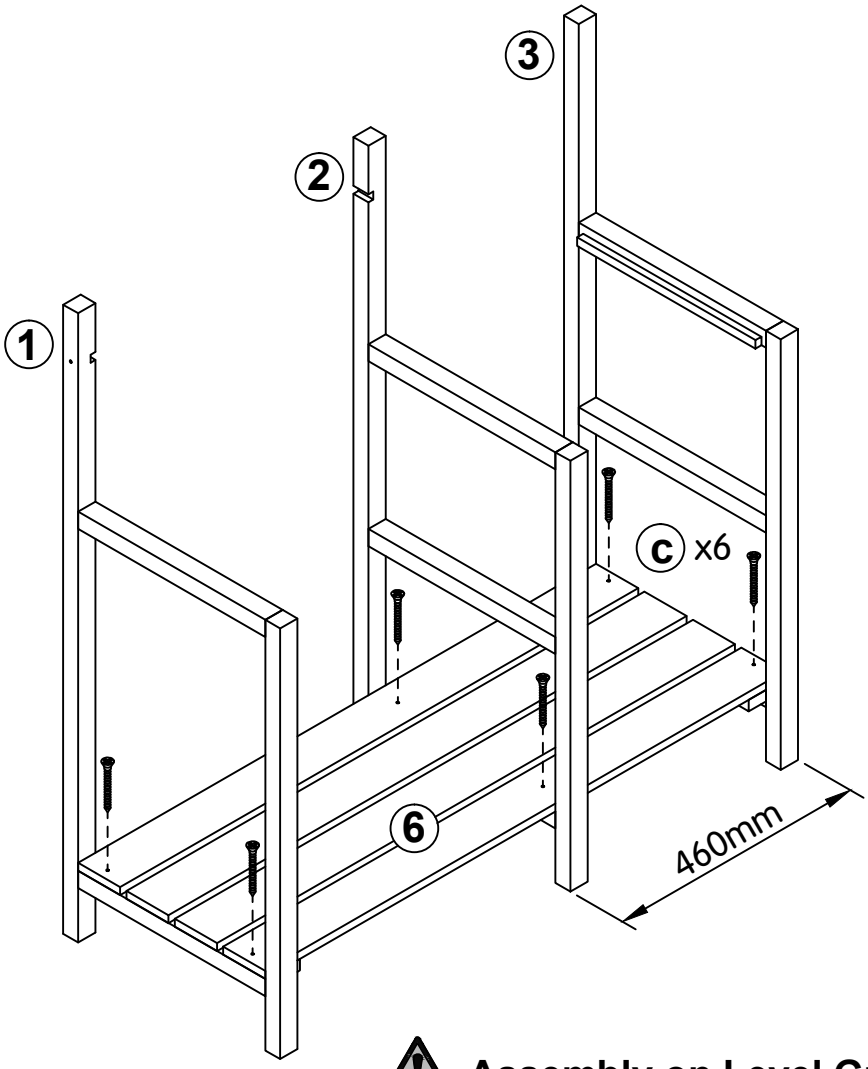

Assembly on Level Ground.

2

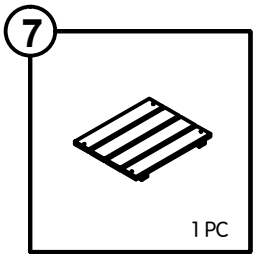

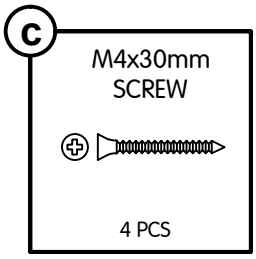

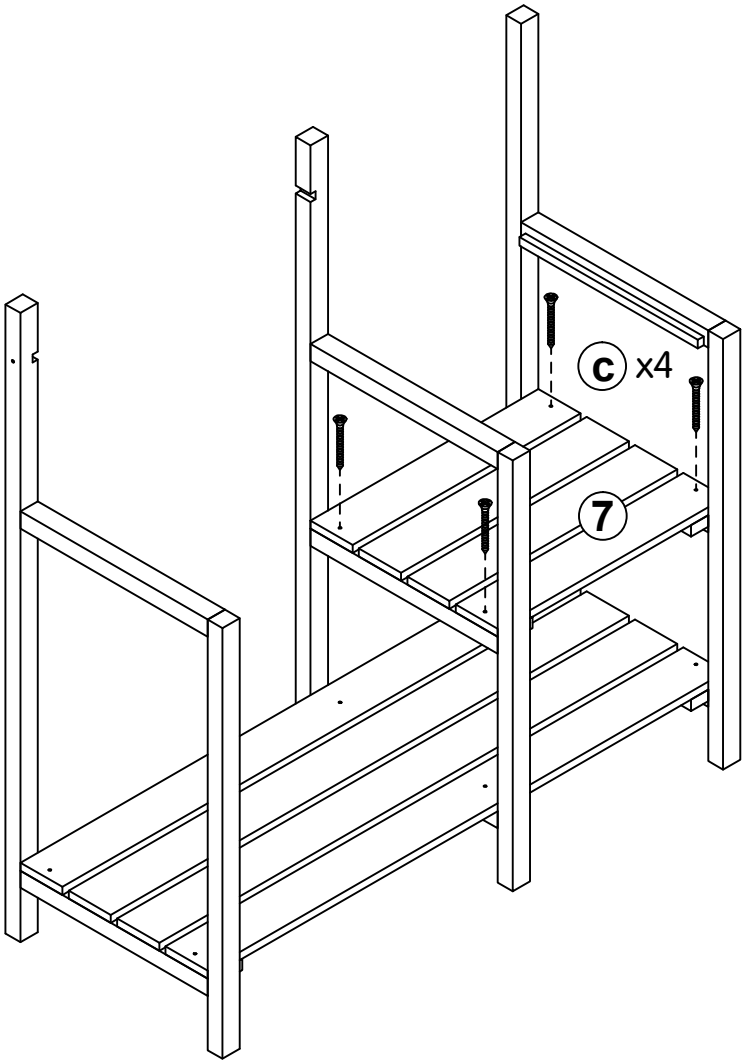

3

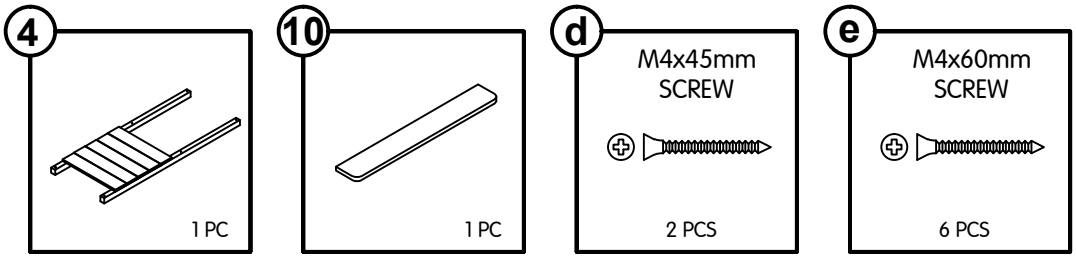
4
1 PC
10
1 PC
d
M4x45mm
SCREW
2 PCS
e
M4x60mm
SCREW
6 PCS

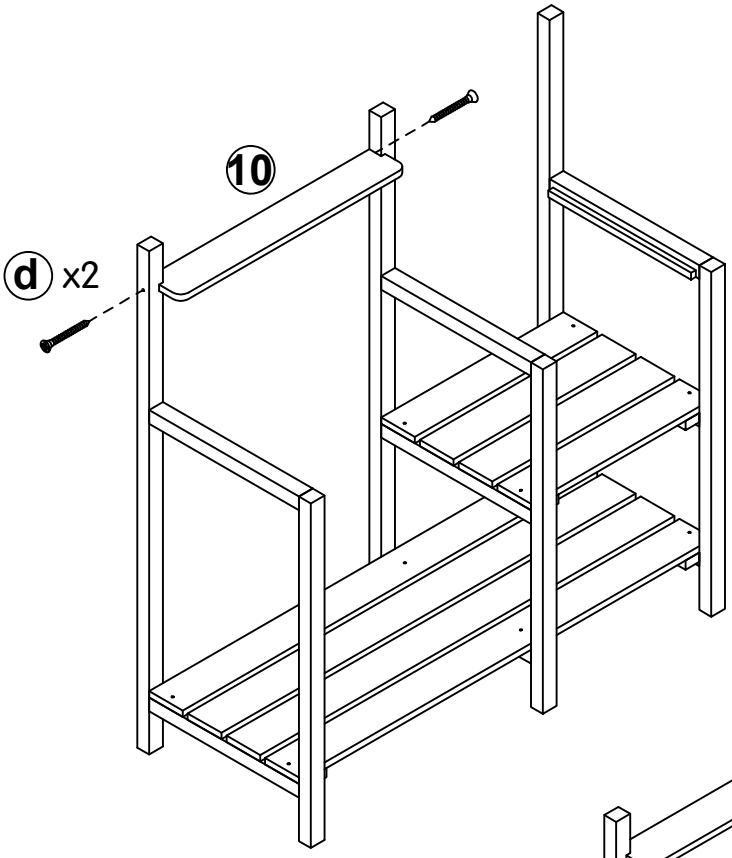
10
d x2

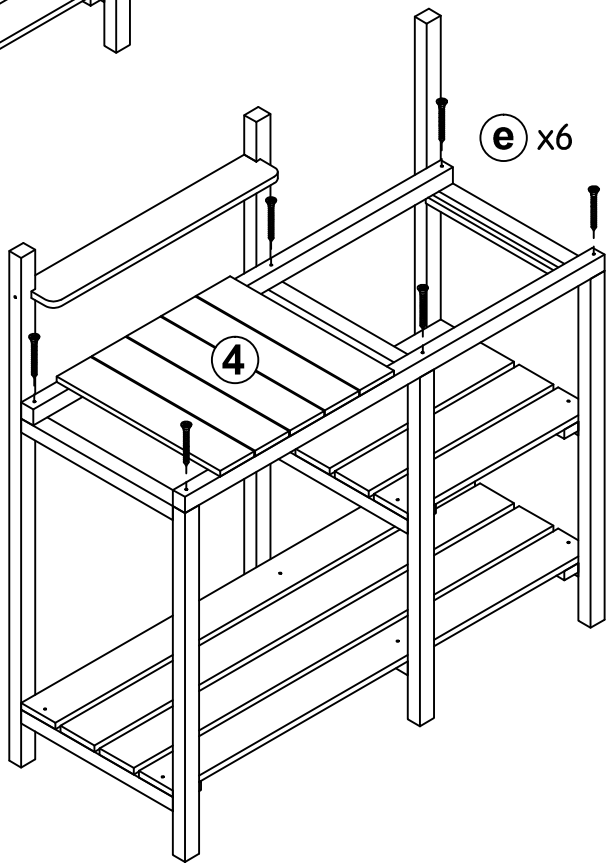
e x6
4

4

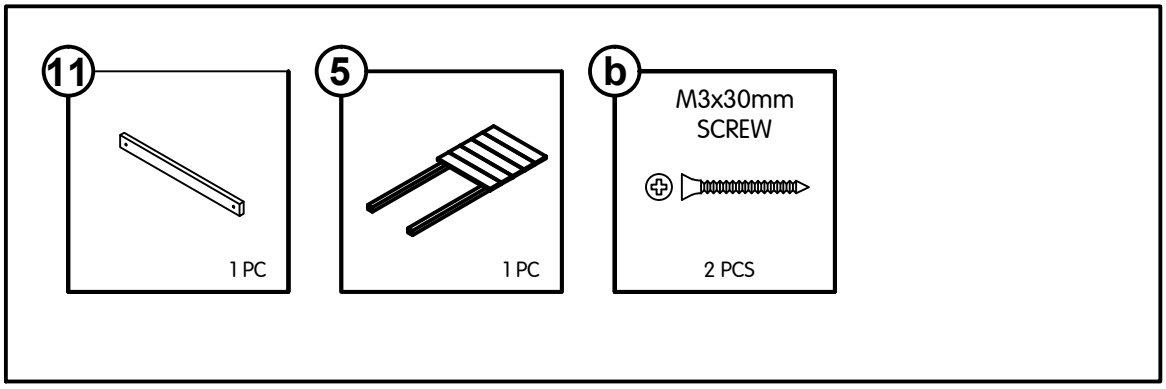

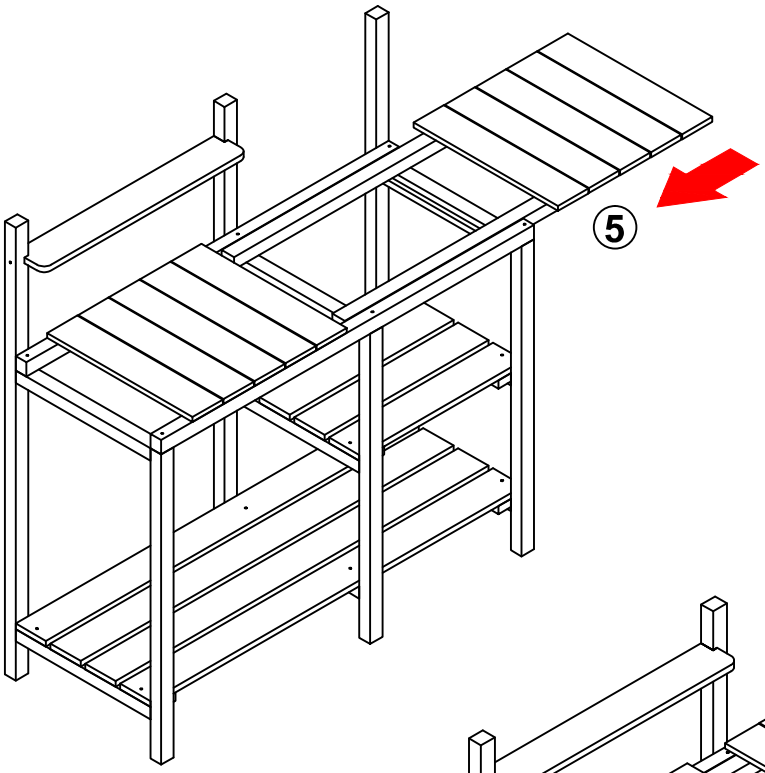

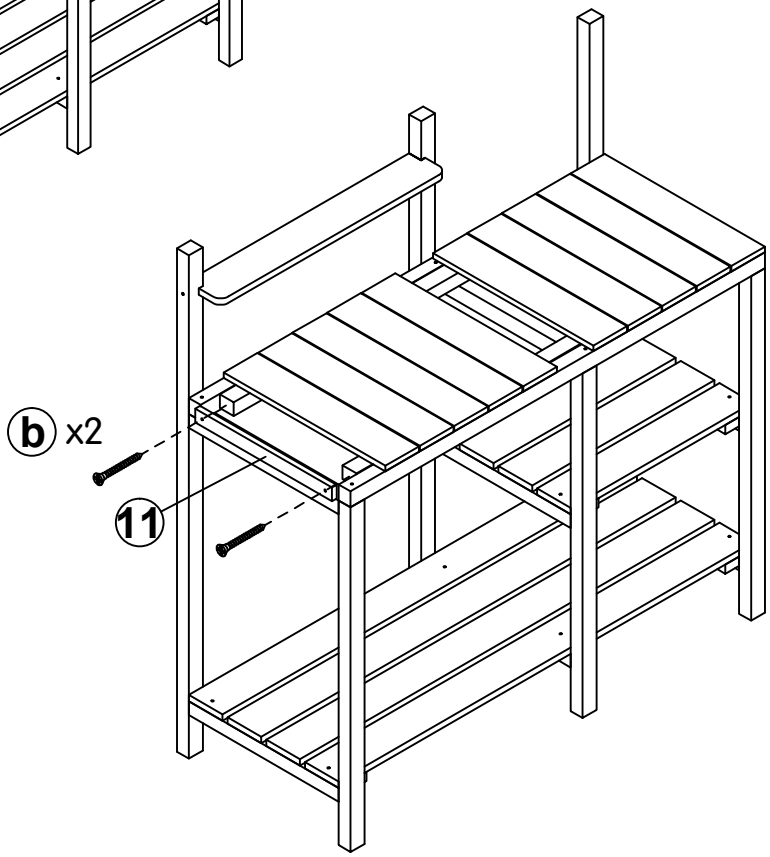

5

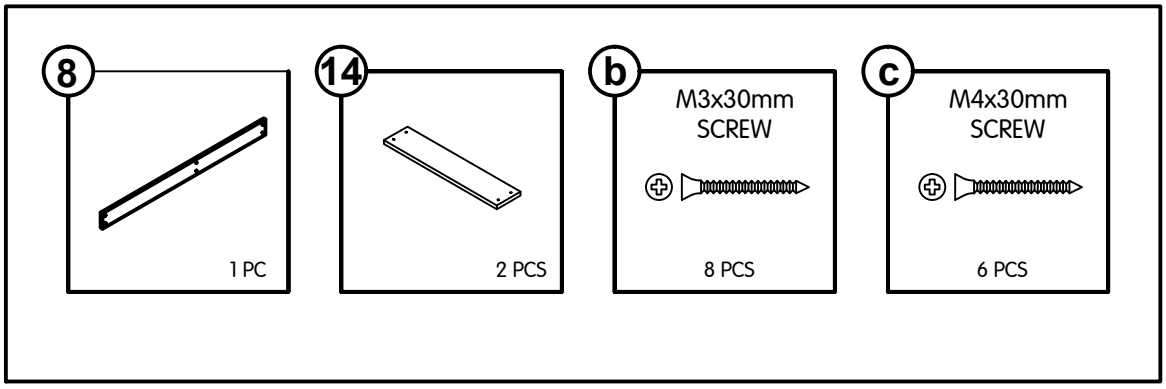
8
1 PC
14
2 PCS
b
M3x30mm
SCREW
8 PCS
c
M4x30mm
SCREW
6 PCS

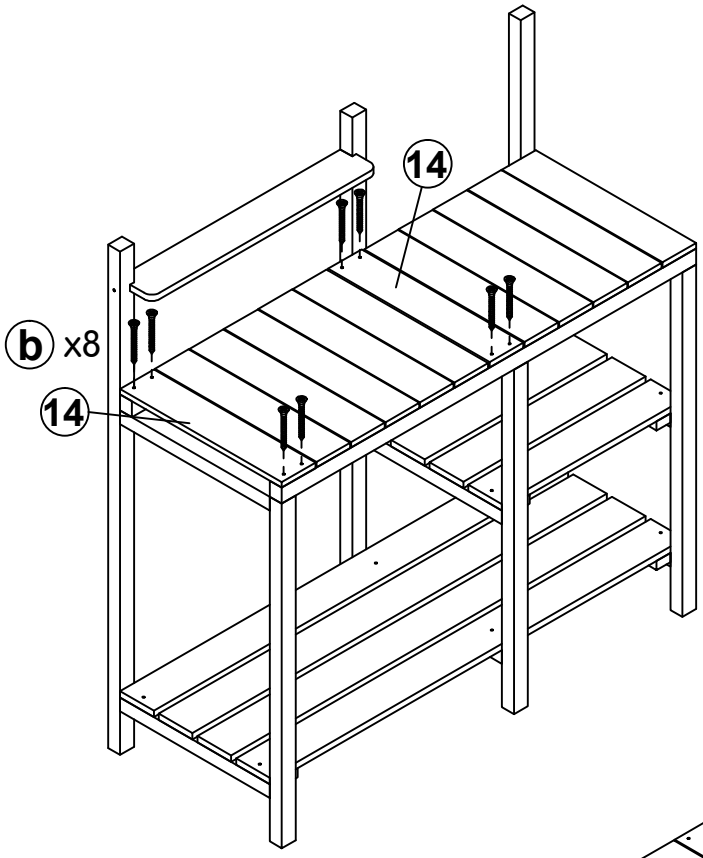
14
b x8
14

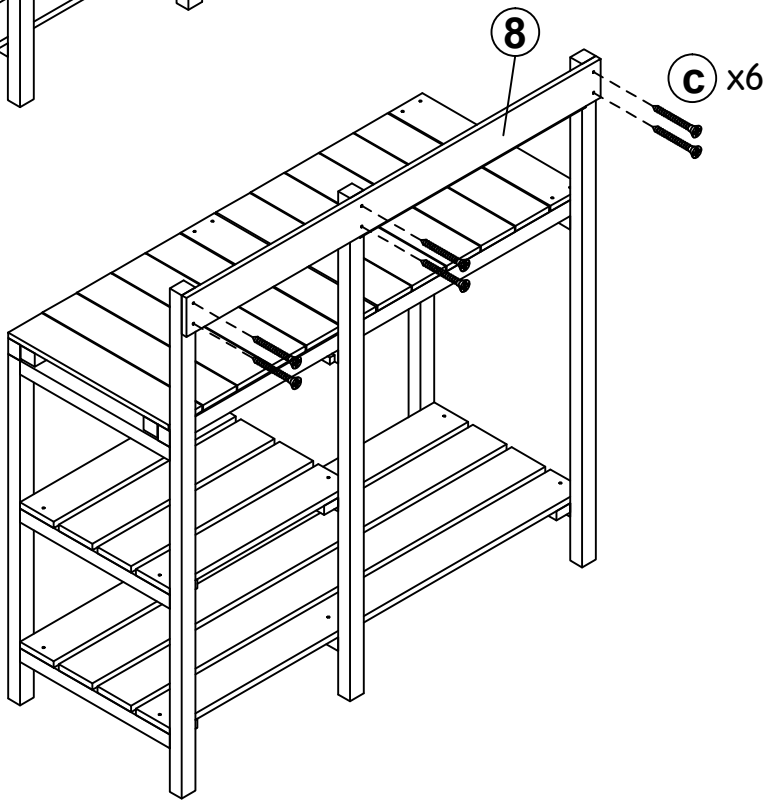
8
c x6

6

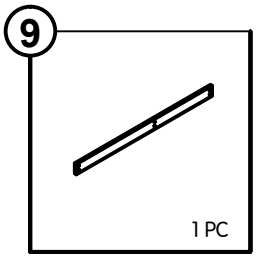
9
1 PC

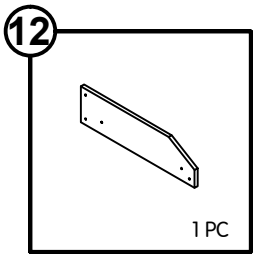
12
1 PC

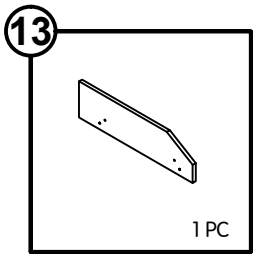
13
1 PC

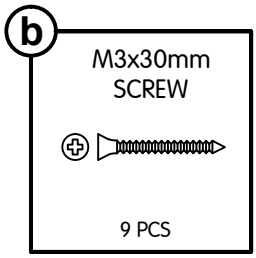
b
M3x30mm
SCREW
9 PCS

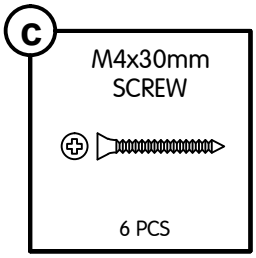
c
M4x30mm
SCREW
6 PCS

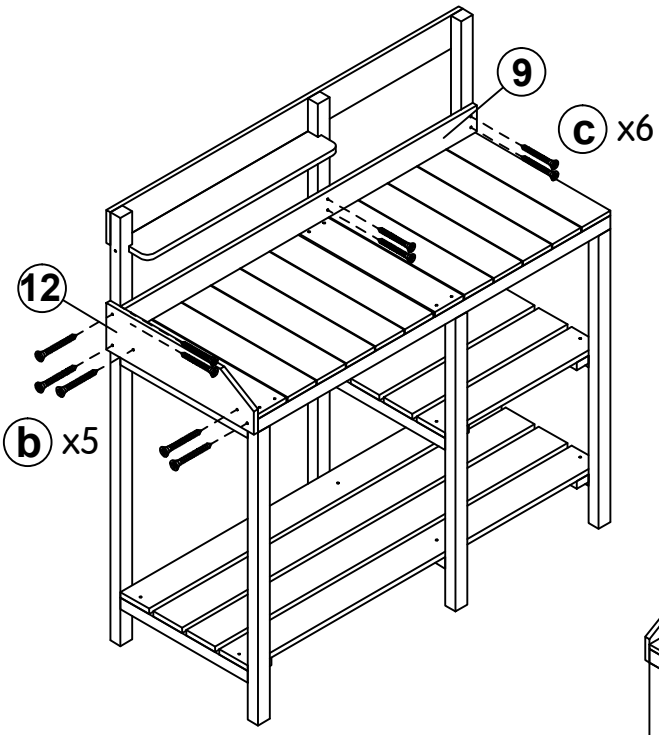
9
c x6
12
b x5

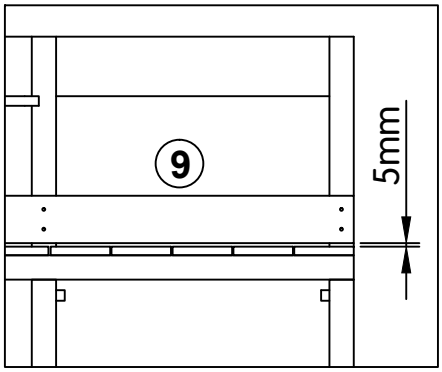
9
5mm

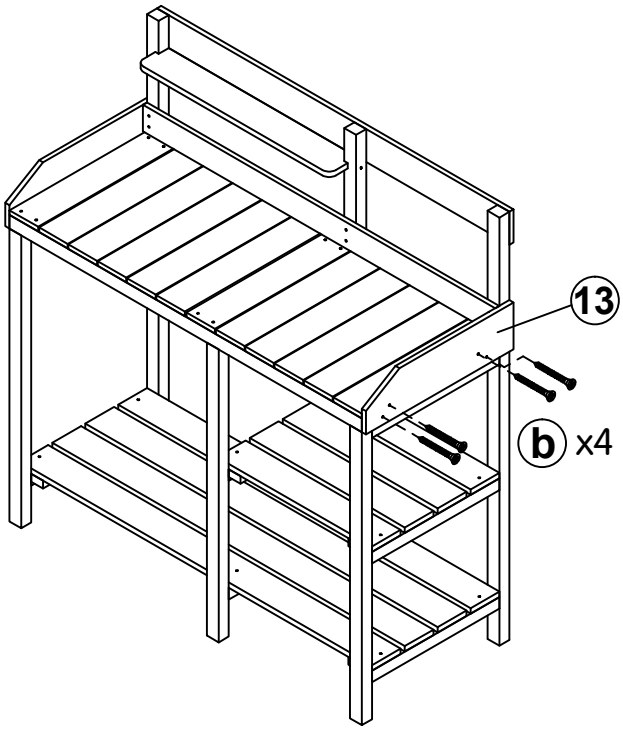
13
b x4
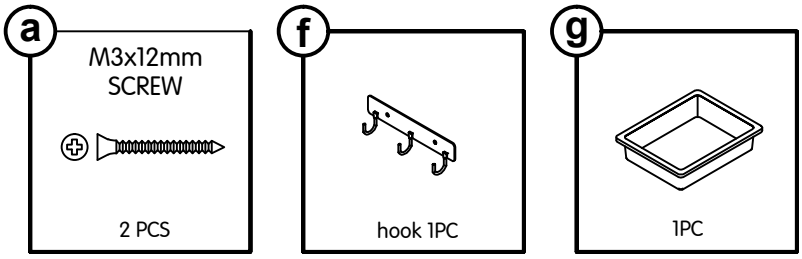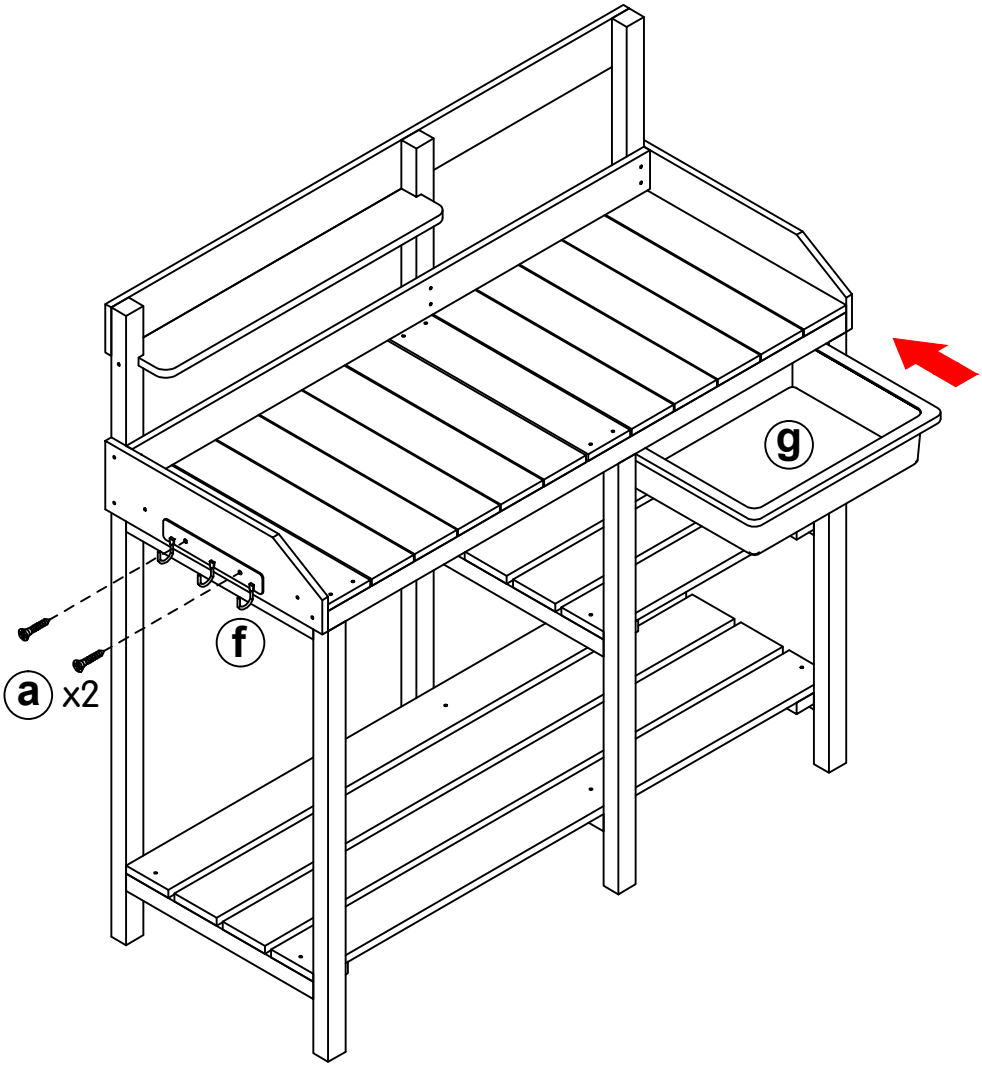
7