# 6 PIECES PATIO CONVERSATION SET
# ASSEMBLY INSTRUCTIONS

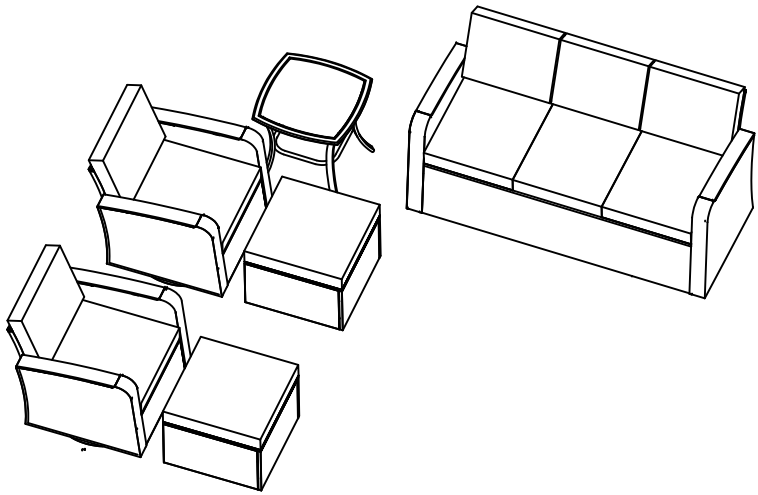

# ATTENTION

THANKS FOR CHOOSING OUR PRODUCTS!

1. This 6 PIECES PATIO CONVERSATION SET comes in 3 boxes,please check the part list carefully to make sure you've received all the parts.

2. If there are any missing parts ,please contact us with the part # and quantity,we will send them to you ASAP.

3. If there are any damaged parts,please contact us with clear pictures or video,we will offer you the best solution after confirming it.

# Assembly Instructions

## Parts List(BOX A)

| | | | |
|---|---|---|---|
| Z 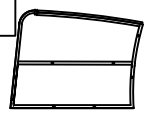 | q 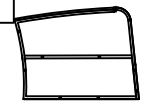 | r 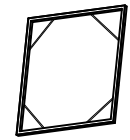 | t 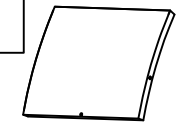 |
| 2 PCS | 2 PCS | 2 PCS | 2 PCS |
| f  M6 | ①  | ② 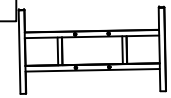 | ③ 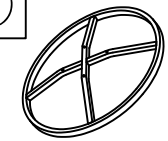 |
| 131 PCS | 4 PCS | 2 PCS | 2 PCS |
| ④  | j 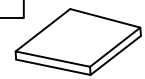 | k 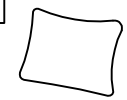 | b  |
| 2 PCS | 2 PCS | 2 PCS | 1 PC |
| c  M6x30mm | d  M6x35mm | | |
| 44 PCS | 63 PCS | | |

# Assembly Instructions

## Parts List(BOX A)

| | | | |
|---|---|---|---|
| m  M6x15mm | n  | y  M6 | z  |
| 8 PCS | 22 PCS | 16 PCS | 8 PCS |
| o  | | | |
| 1 PC | | | |

## Parts List(BOX B)

| | | | |
|---|---|---|---|
| A  | B  | P  | Q  |
| 1 PC | 1 PC | 1 PC | 1 PC |
| R  | S  | j 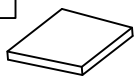 | k 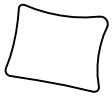 |
| 1 PC | 1 PC | 1 PCS | 2 PCS |

# Assembly Instructions

## Parts List(BOX C)

| | | | |
|---|---|---|---|
| T 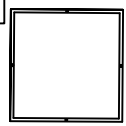 | U 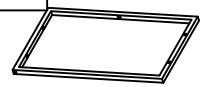 | j1 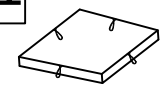 | k  |
| 2 PCS | 8 PCS | 2 PCS | 1PCS |
| j 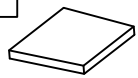 | V 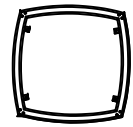 | X  | Y 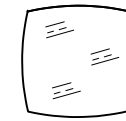 |
| 2PCS | 1PCS | 1PCS | 1PCS |
| W  | | | |
| 4PCS | | | |

# NOTE

1. If one or some screws are fully tightened during assembly,the other screws may not be aligned with screw holes.70% tighten before fastening all screws.Allen wrench is recommended instead of an electric drill.

2. If some screws are not alignes sith holes during assembly,please loosen all the other screws to 70% and continue the assembly process.

3. If the items is not stable,please loosen all the screws,adjust it on a flat ground and tighten all the screws.

# Assembly Instructions

| Step 1 | |
|---|---|
|  | q*1 |
|  | r*1 |
|  M6x35mm | d*2 |
|  M6 | f*2 |

# Assembly Instructions

| Step 2 | |
|---|---|
|  | ①*1 |
|  M6x35mm | d*3 |
|  M6 | f*3 |

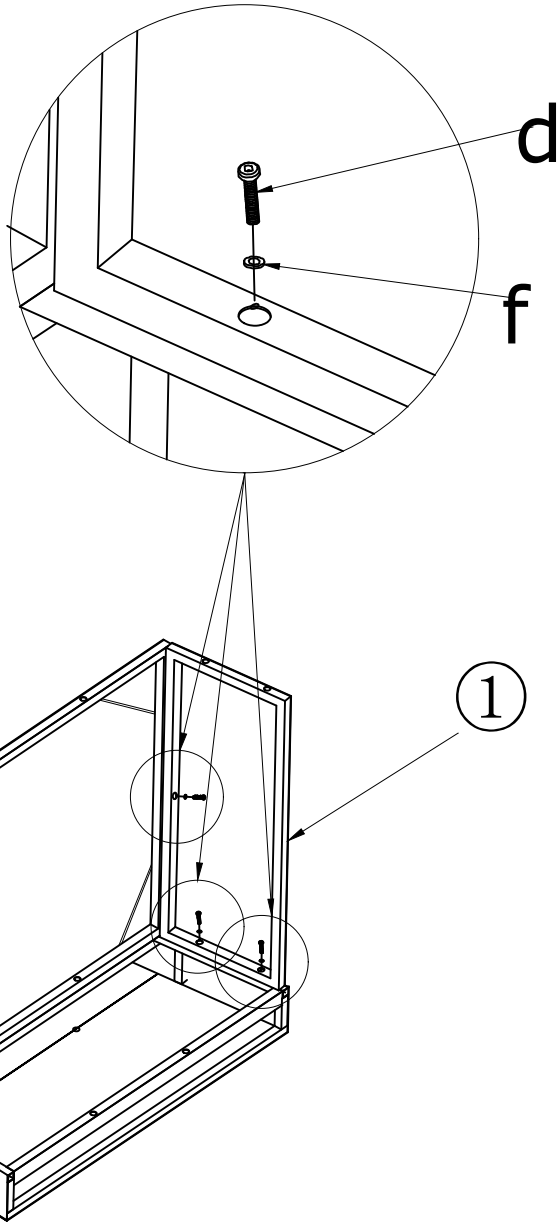

# Assembly Instructions

| Step 3 | |
|---|---|
|  | t*1 |
|  M6x35mm | d*1 |
|  M6 | f*1 |

# Assembly Instructions

| Step 4 | |
|---|---|
|  | u*1 |
|  M6x35mm | d*3 |
|  M6 | f*3 |

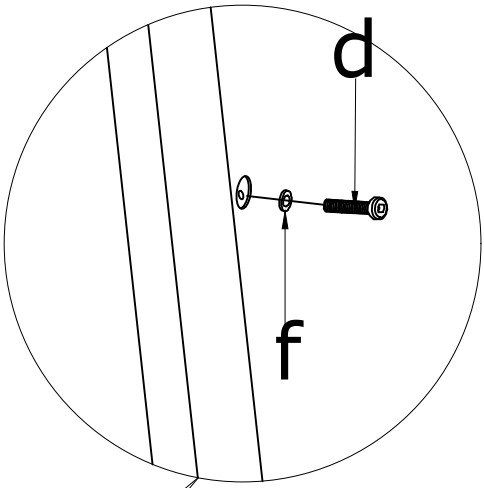


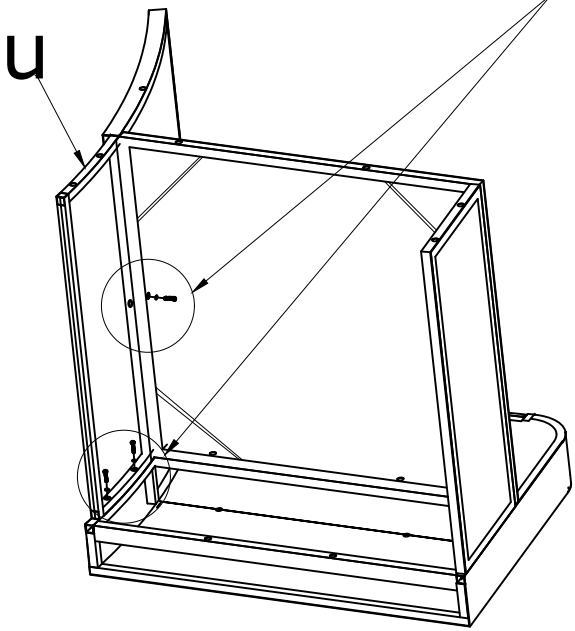

# Assembly Instructions

| Step 5 | |
|---|---|
|  | Z*1 |
|  M6x35mm | d*5 |
|  M6 | f*5 |

# Assembly Instructions

| Step 6 | |
|---|---|
| M6x35mm | d*2 |
| M6 | f*2 |

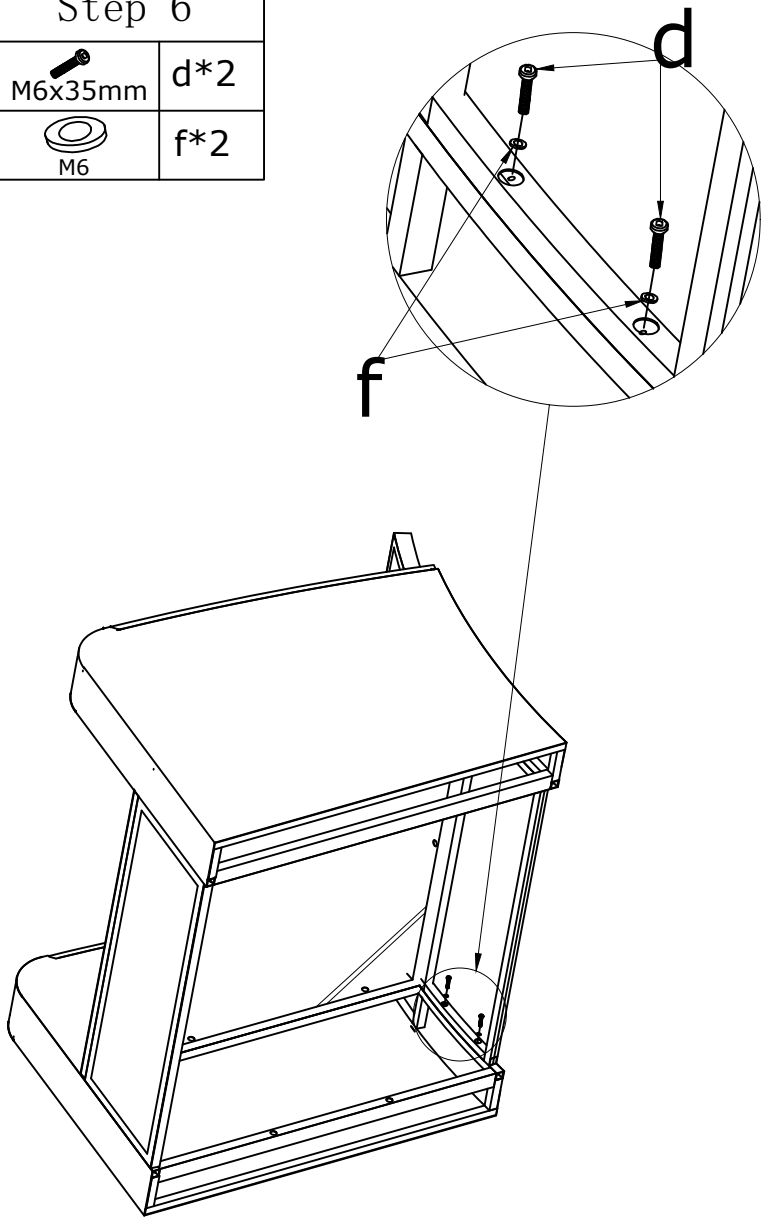

# Assembly Instructions

| Step 7 | |
|---|---|
|  | ④*1 |
|  | ③*1 |
|  M6x30mm | c*4 |
|  M6 | f*8 |
|  M6 | y*4 |

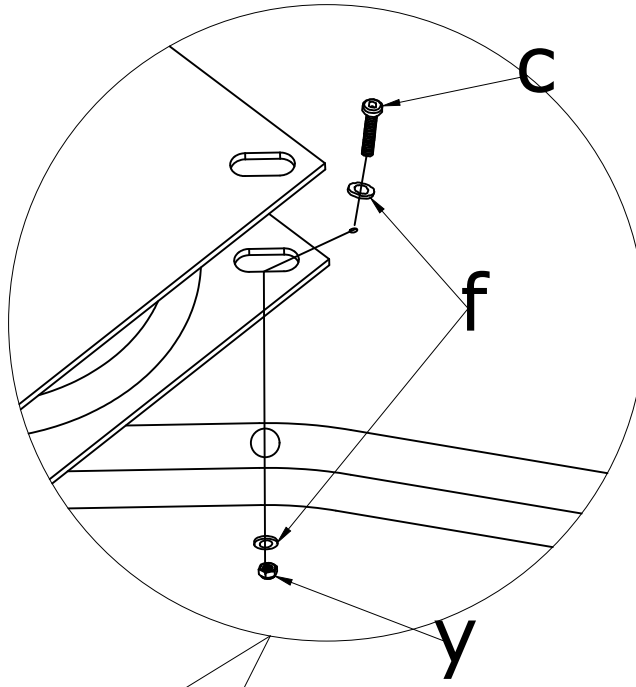


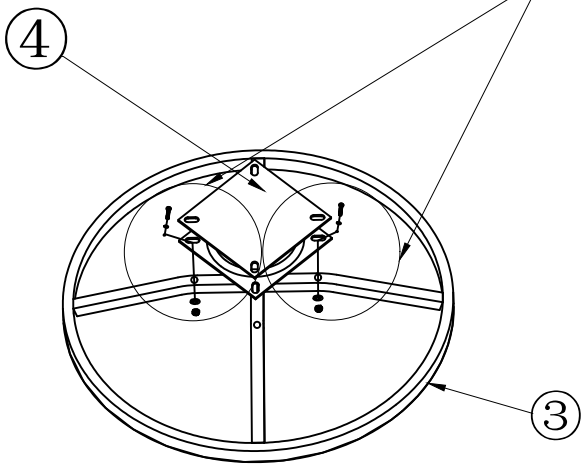

# Assembly Instructions

| Step 8 | |
|---|---|
| 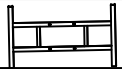 | ②*1 |
|  M6x30mm | c*4 |
|  M6 | f*8 |
|  M6 | y*4 |

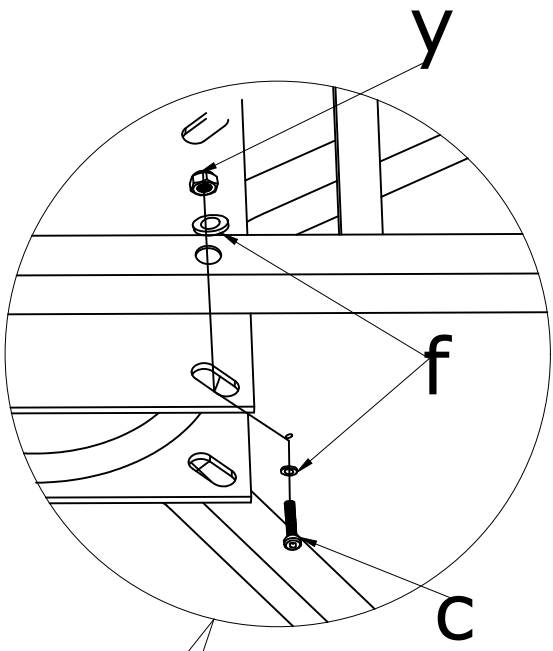


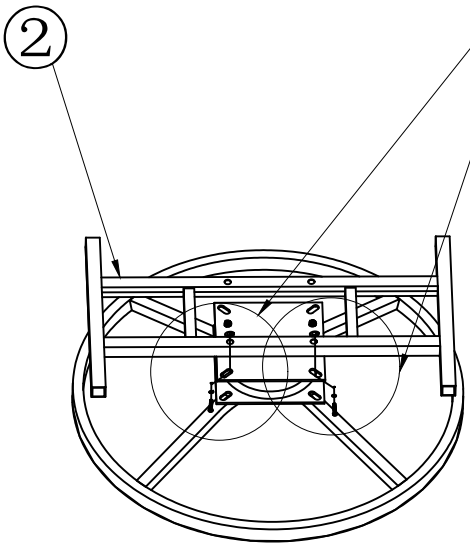

# Assembly Instructions

| Step 9 | |
|---|---|
| M6x35mm | d*4 |
| M6 | f*4 |

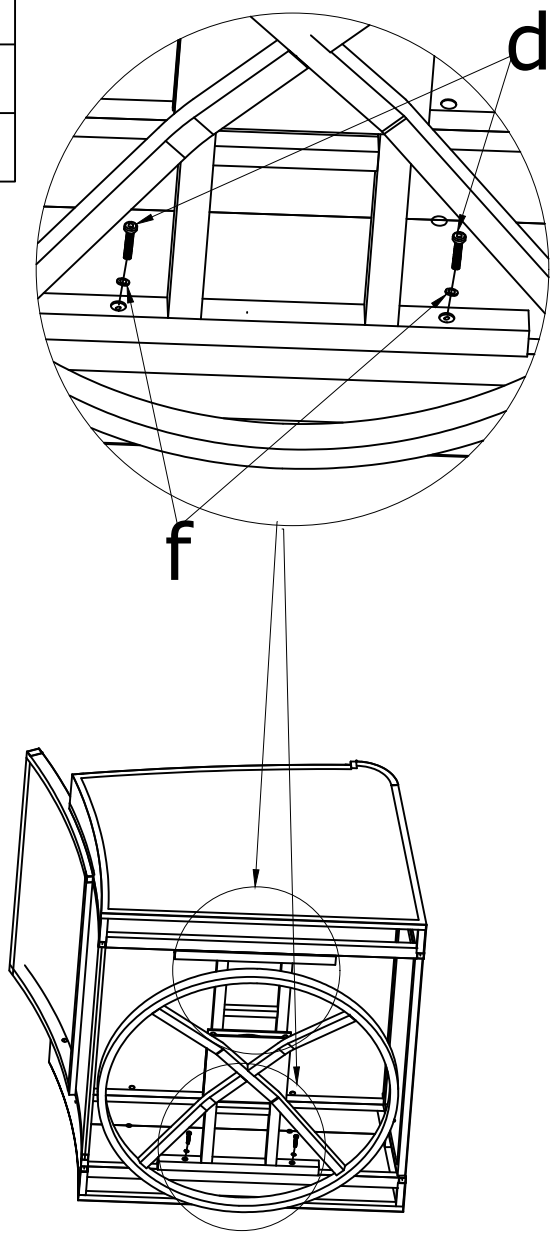

# Assembly Instructions

Step 10



n*6

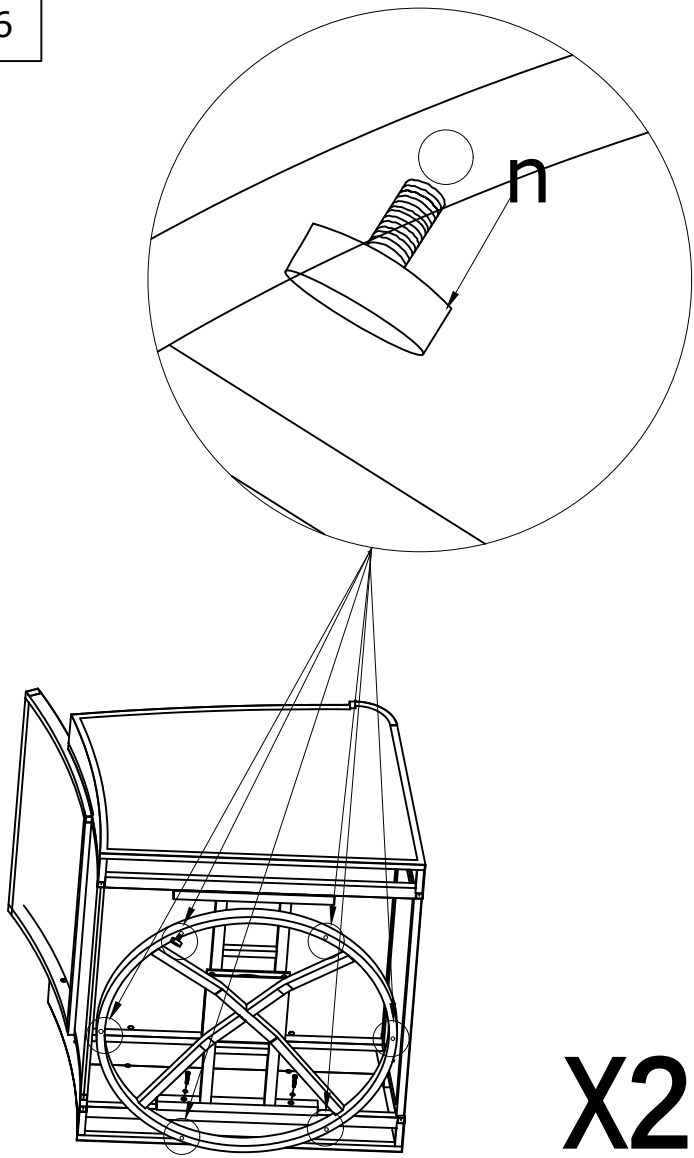

# Assembly Instructions

| Step 11 | |
|---|---|
|  | V*1 |
|  | W*4 |
|  M6x15mm | m*8 |
|  M6 | f*8 |

# Assembly Instructions

| Step 12 | |
|---|---|
| | X*1 |
| M6x30mm | c*4 |
| M6 | f*4 |
| | n*4 |

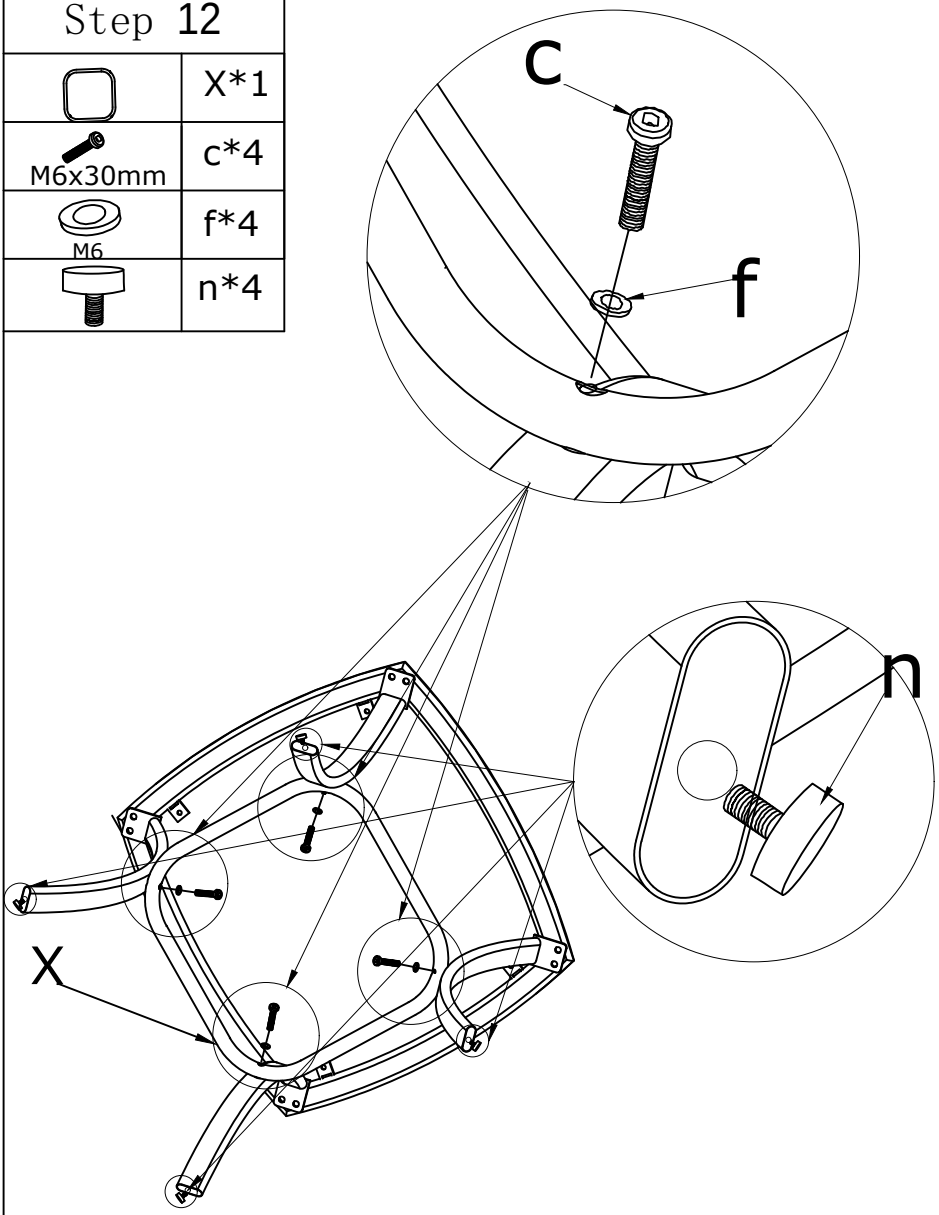

# Assembly Instructions

| Step 13 | |
|---|---|
|  | Y*1 |

# Assembly Instructions

| Step 14 | |
|---|---|
|  | N*1 |
|  | P*1 |
|  M6x35mm | d*2 |
|  M6 | f*2 |

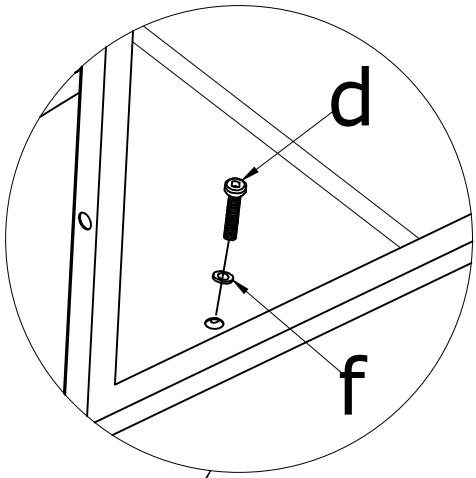


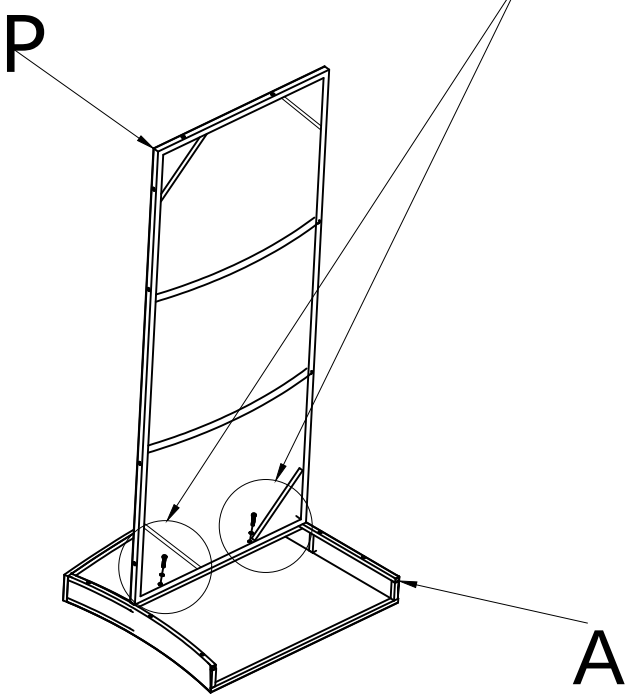

# Assembly Instructions

| Step 15 | |
|---|---|
| | Q*1 |
| M6x35mm | d*4 |
| M6 | f*4 |

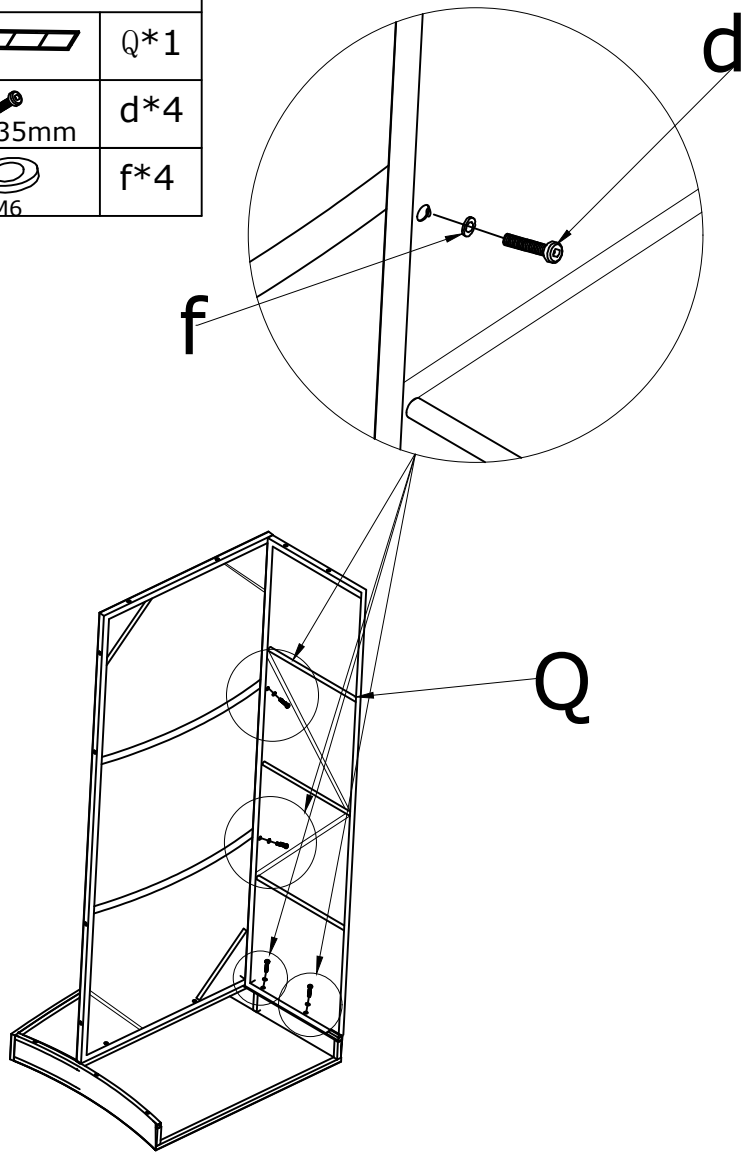

# Assembly Instructions

| Step 16 | |
|---|---|
| 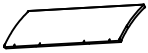 | S*1 |
|  M6x35mm | d*1 |
|  M6 | f*1 |

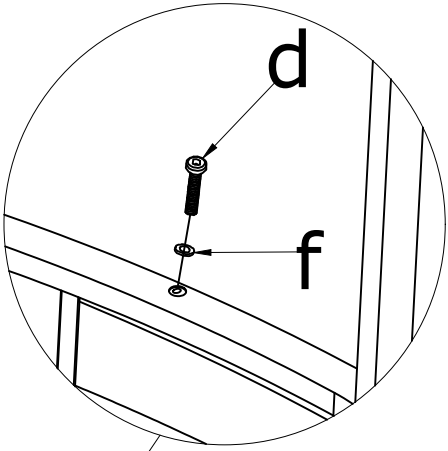


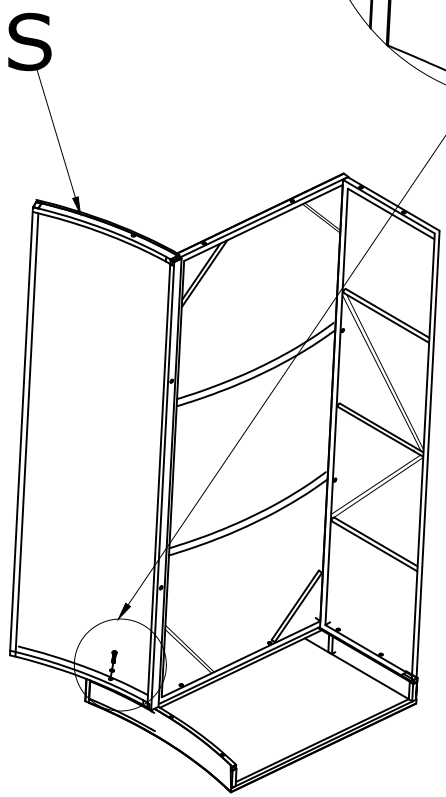

# Assembly Instructions

| Step 17 | |
|---|---|
| | R*1 |
| M6x35mm | d*9 |
| M6 | f*9 |

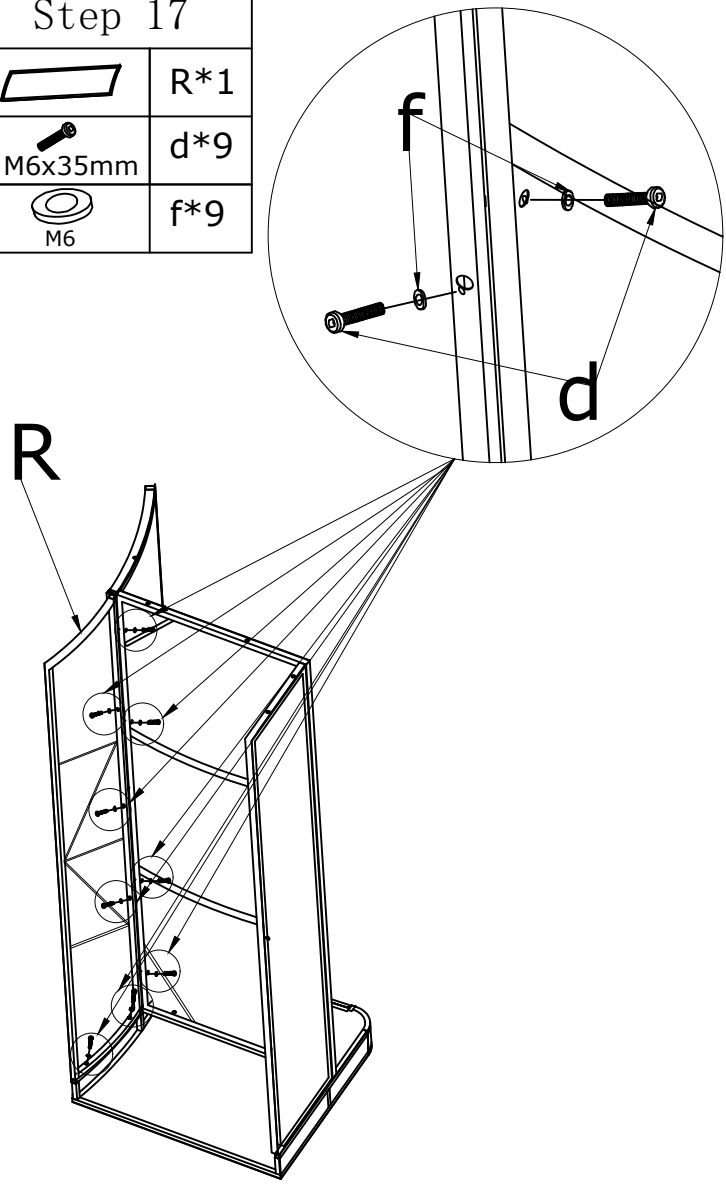

# Assembly Instructions

| Step 18 | |
|---|---|
|  | B*1 |
|  M6x35mm | d*5 |
|  M6 | f*5 |

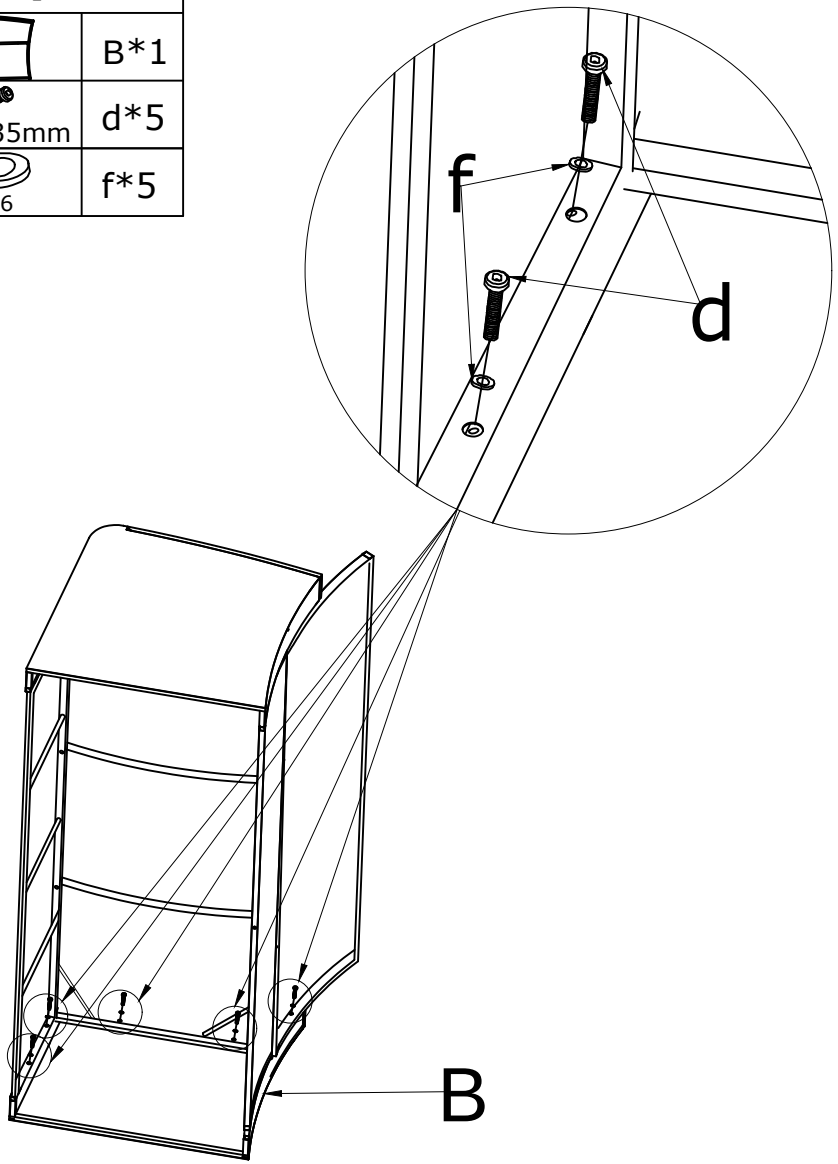

# Assembly Instructions

| Step 19 | |
|---|---|
| M6x35mm | d*2 |
| M6 | f*2 |
| | n*6 |

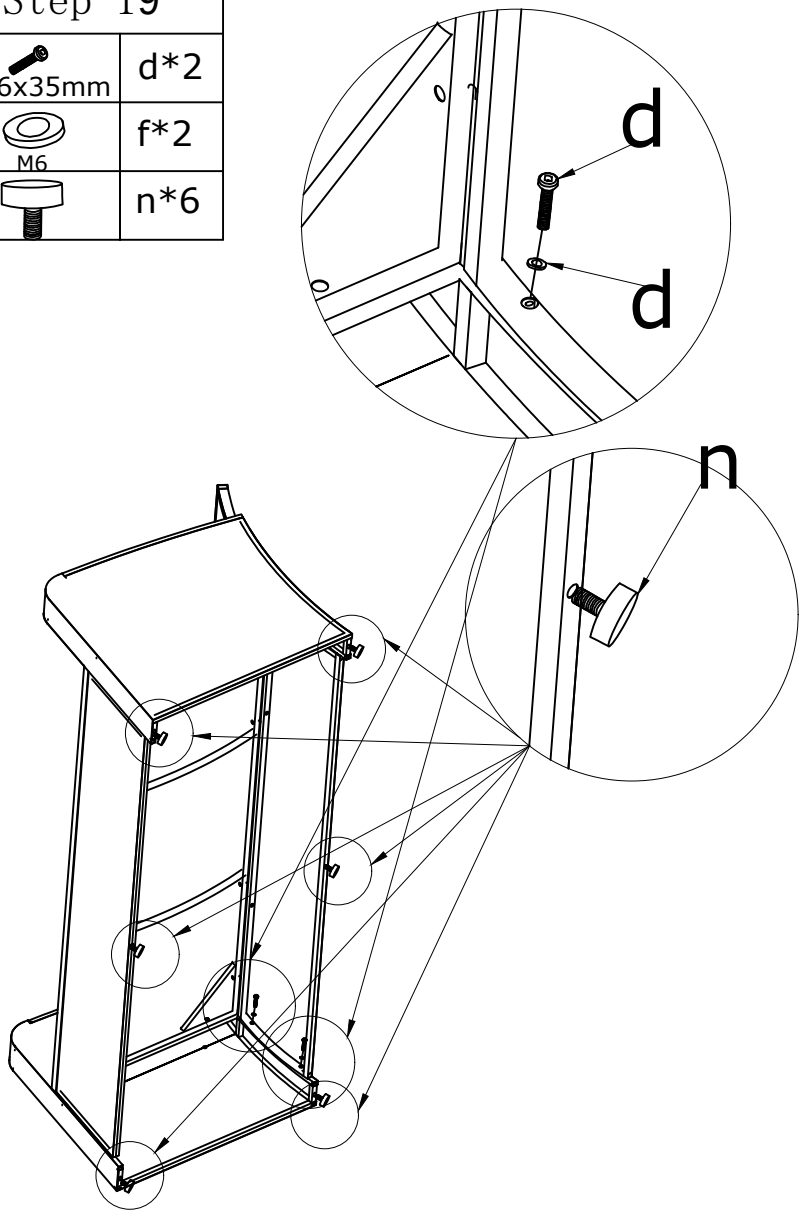

# Assembly Instructions

| Step 20 | |
|---|---|
| | T*1 |
| | U*1 |
| M6x30mm | c*1 |
| M6 | f*1 |

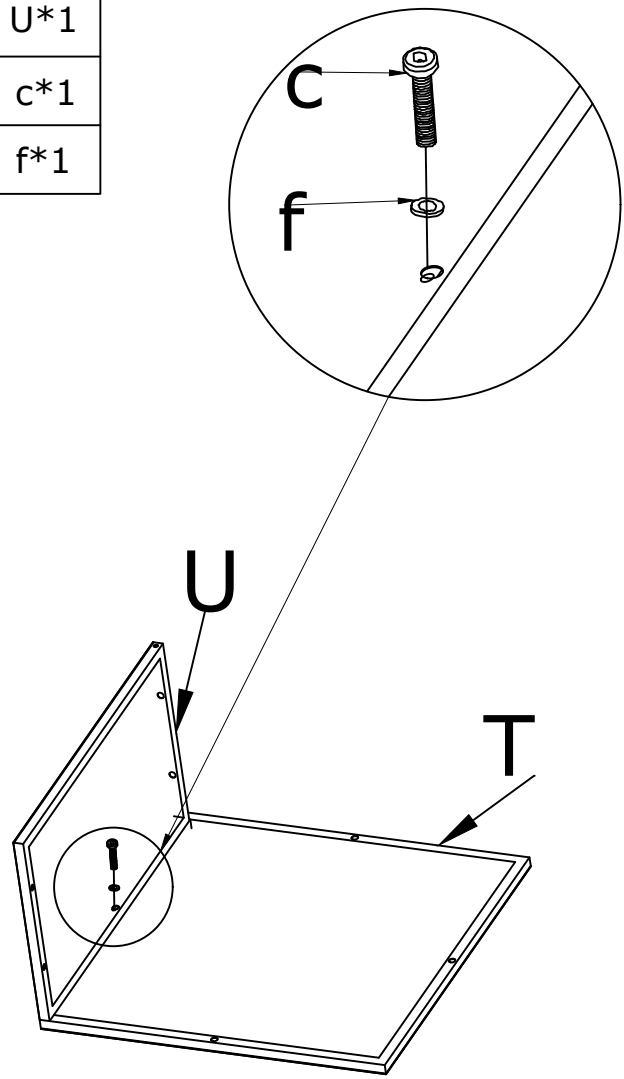

# Assembly Instructions

| Step 21 | |
|---|---|
| | U*1 |
| M6x30mm | c*3 |
| M6 | f*3 |

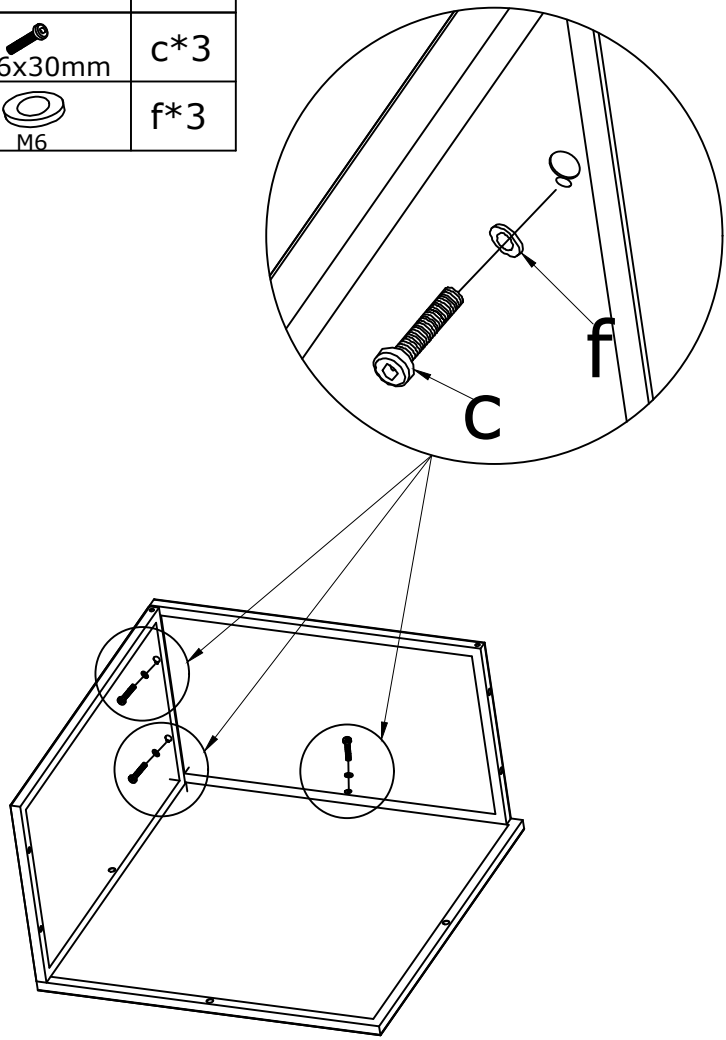

# Assembly Instructions

| Step 22 | |
|---|---|
|  | U*1 |
|  M6x30mm | c*3 |
|  M6 | f*3 |

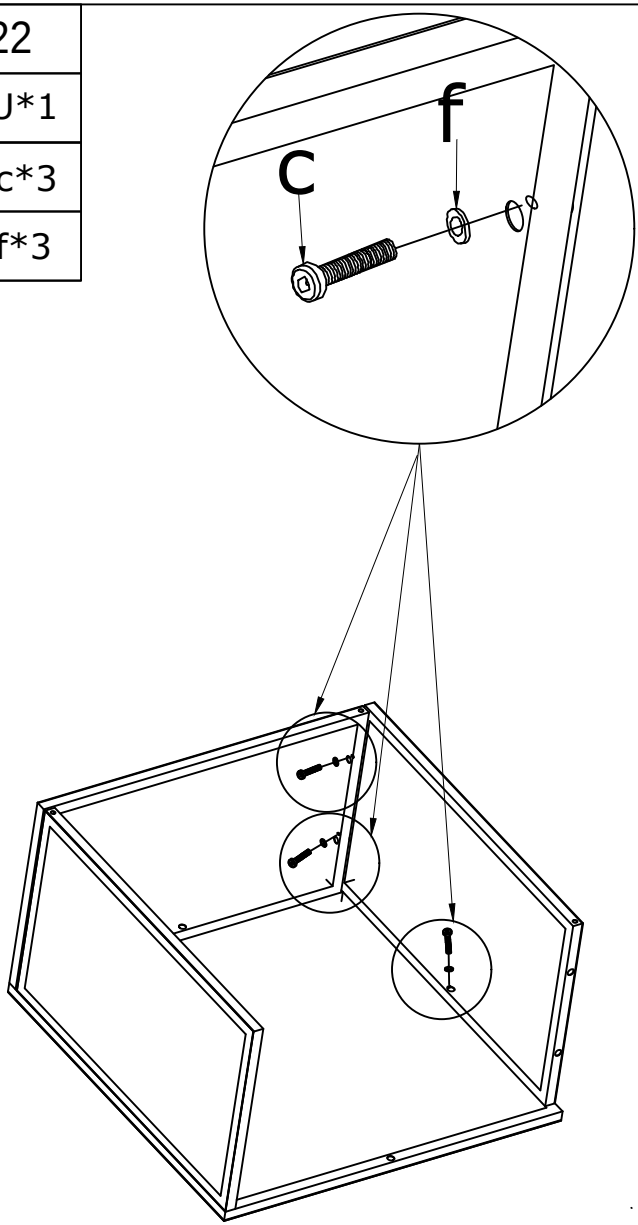

# Assembly Instructions

| Step 23 | |
|---|---|
| | U*1 |
| M6x30mm | c*5 |
| M6 | f*5 |

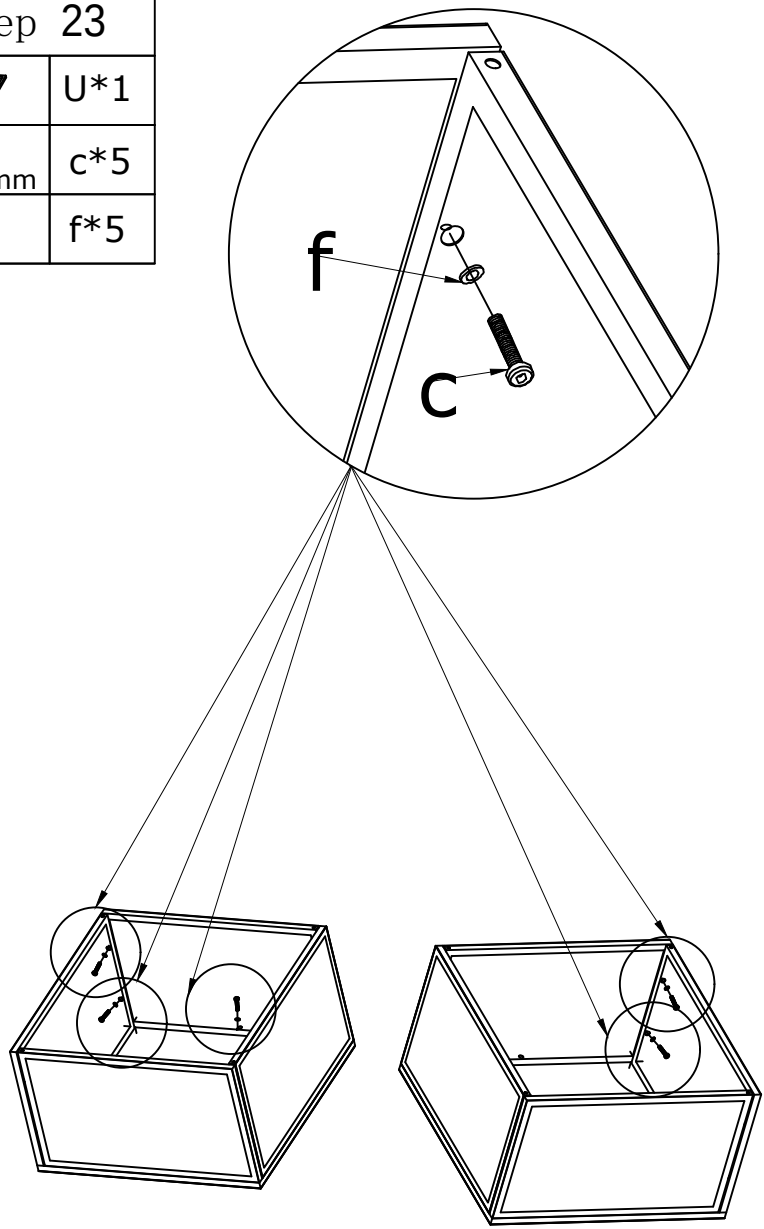

# Assembly Instructions

| Step 24 | |
|---|---|
| | z*4 |

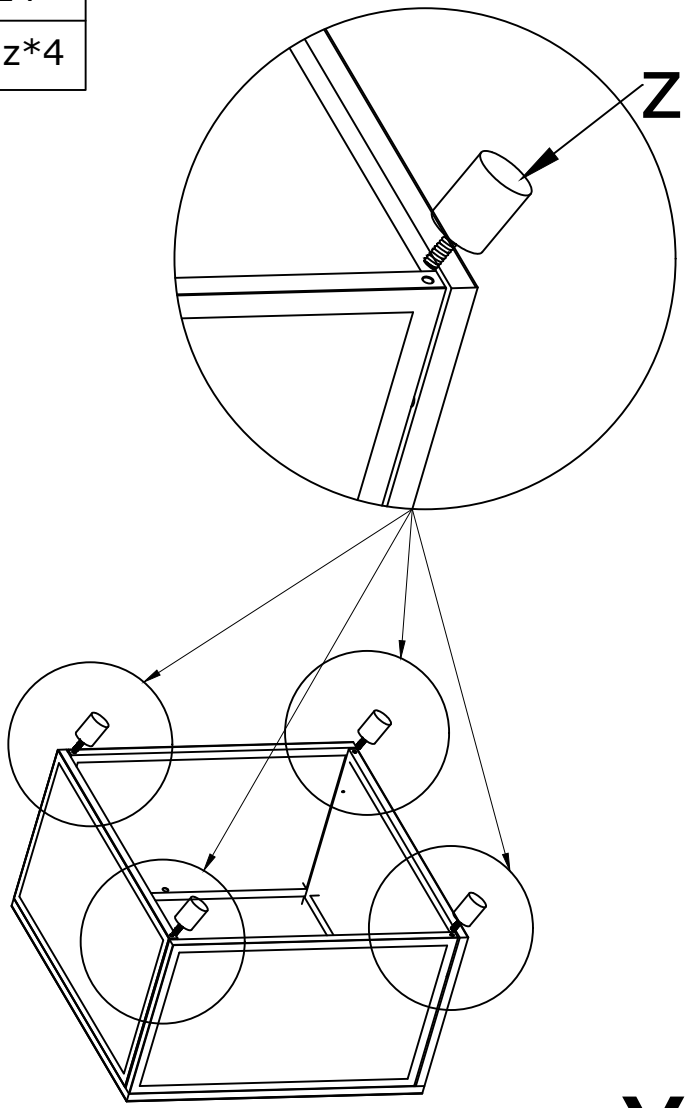


X2

# Assembly Instructions

| Step 25 | |
|---|---|
| 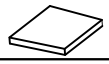 | j*5 |
|  | k*5 |
| 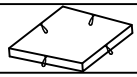 | j1*2 |

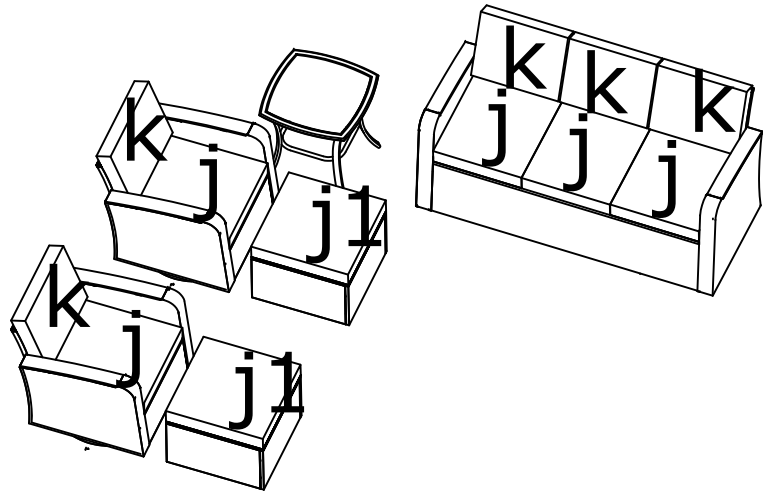

## CONTACT US

If you order products on our store:
Please contact our service team if you need help.

(Guaranteed response within 24 hours)
If you order our products on Wayfair
etc.
Log in Wayfair etc,tocontact theseller.
Order>Sold By>Contact Seller

## WARRANTY

So glad you have completed the assembly and can enjoy it.
If you are satisfied with our products,thank you for showing your favored 6 PIECES PATIO CONVERSATION SET to your around.

### Customer Service:

Any problem with the product or shipping issue,please feel free to contact,we will try our best to serve and help.