JNB-LC02

Important

Please inspect all items carefully before assembling.
If for any reason you need to return this item, you must return it in its original packaging.
Assembled items can not be returned.

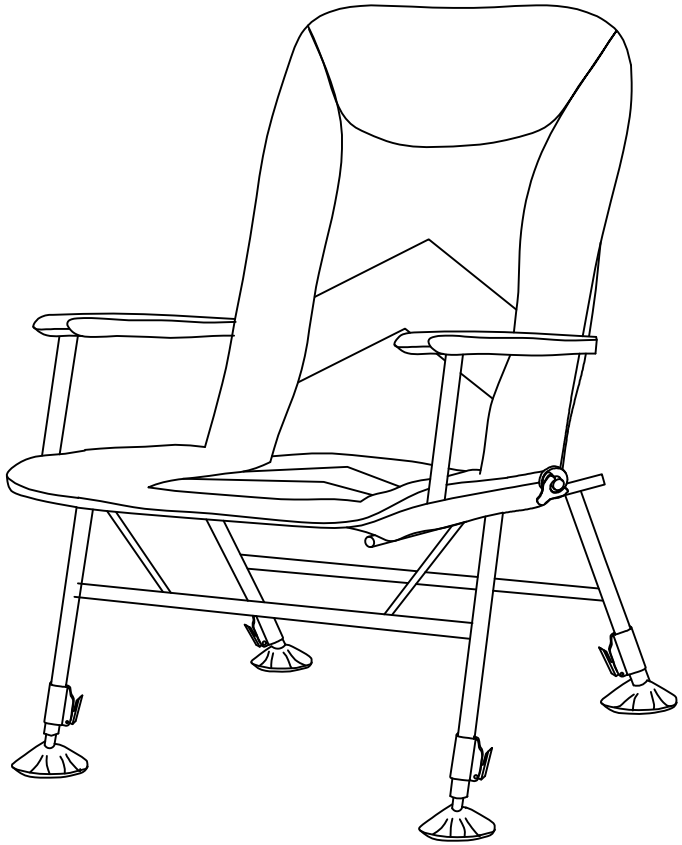

Important Note:

*Place all parts on a clean and smooth surface such as a rug or carpet to avoid the parts from being scratched.

*Kindly follow the assembly instruction step by step.

*Don't tighten all screws until the table is fully set-up.

1

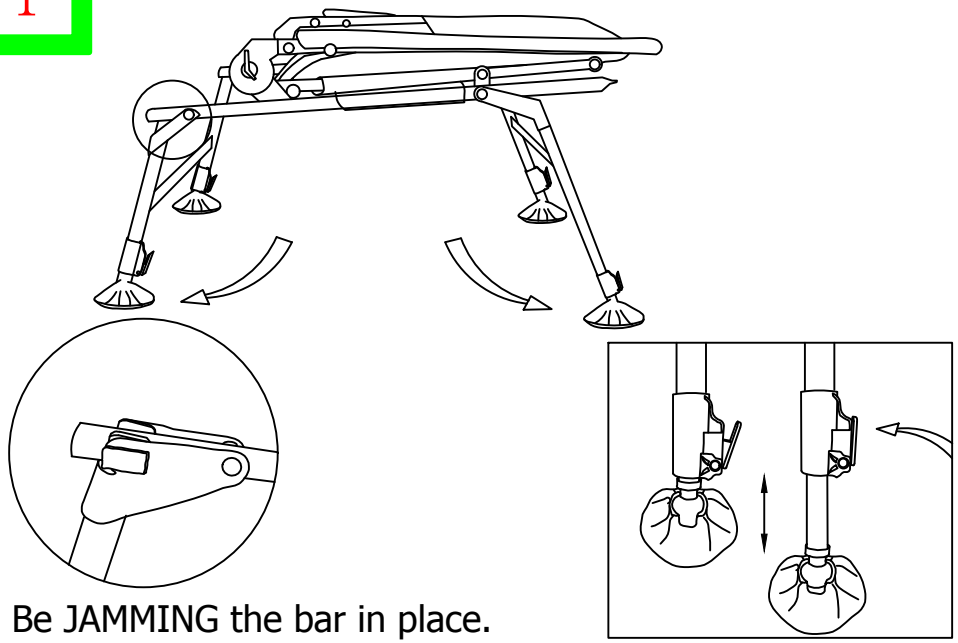

Be JAMMING the bar in place.

2

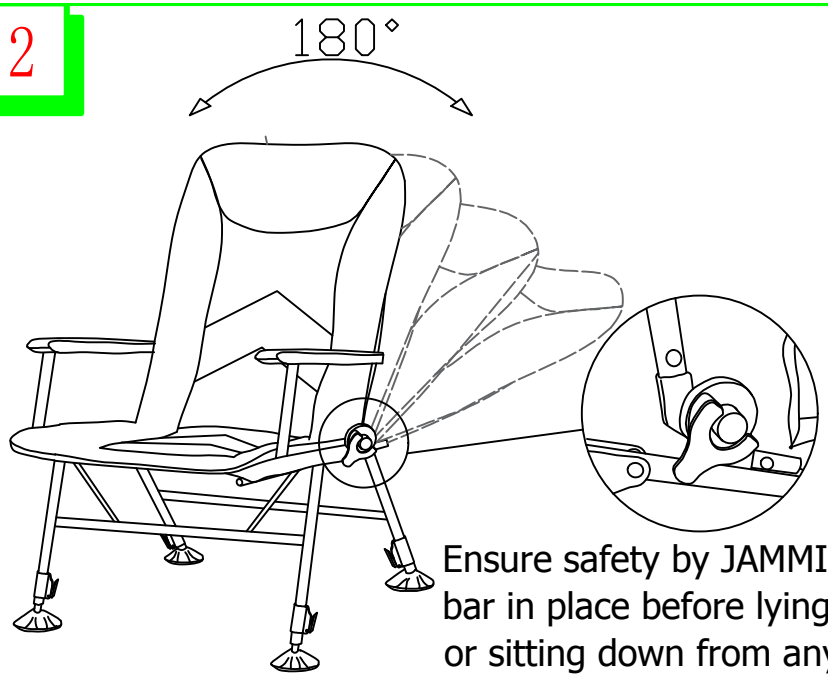

Ensure safety by JAMMING the bar in place before lying down or sitting down from any angle.

3

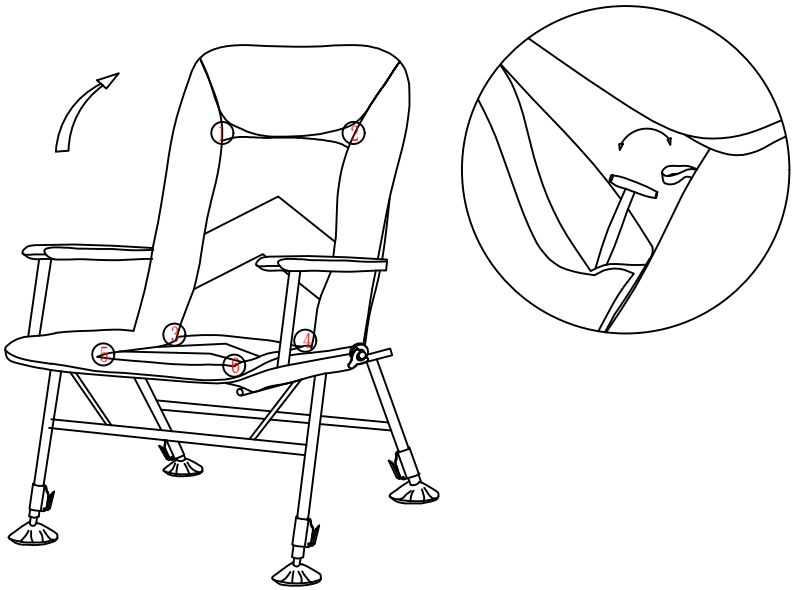
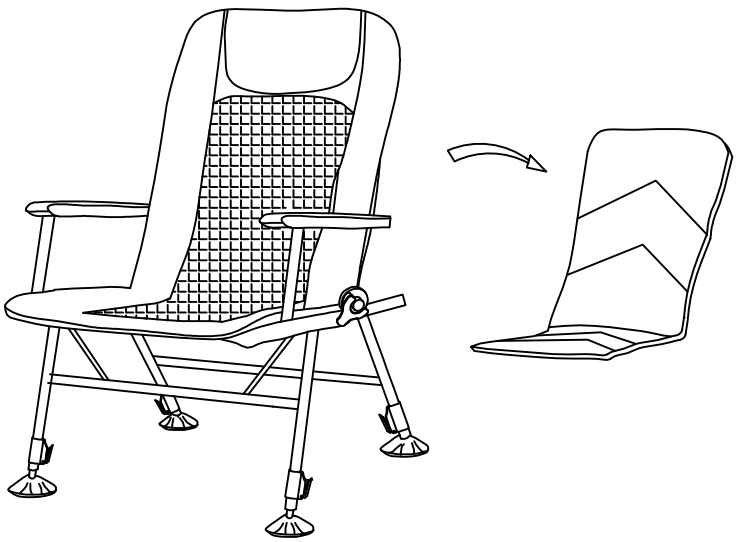
4