INSTALLATION
Product Manual

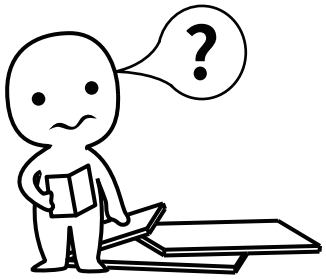

IMPORTANT INFORMATION!

please read the entire manual before starting to assemble and/or using this product.follow the manual thoroughly and keep it for further reference.

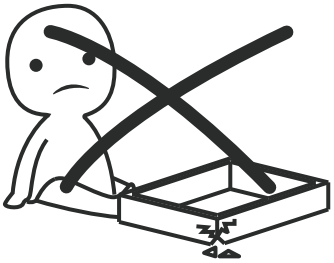

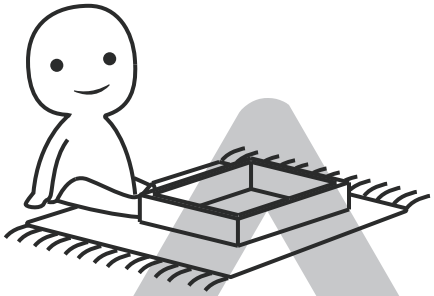

AVOID SCRATCHES!

In order to avoid scratching this furnuture should be assembled on a soft layer-could be a rug.

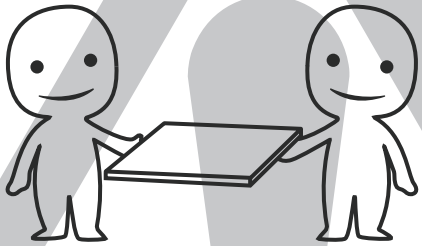

IMPROVE EFFICIENCY !

Try to find a partner to install with you, which can speed up the installation efficiency and shorten the time.

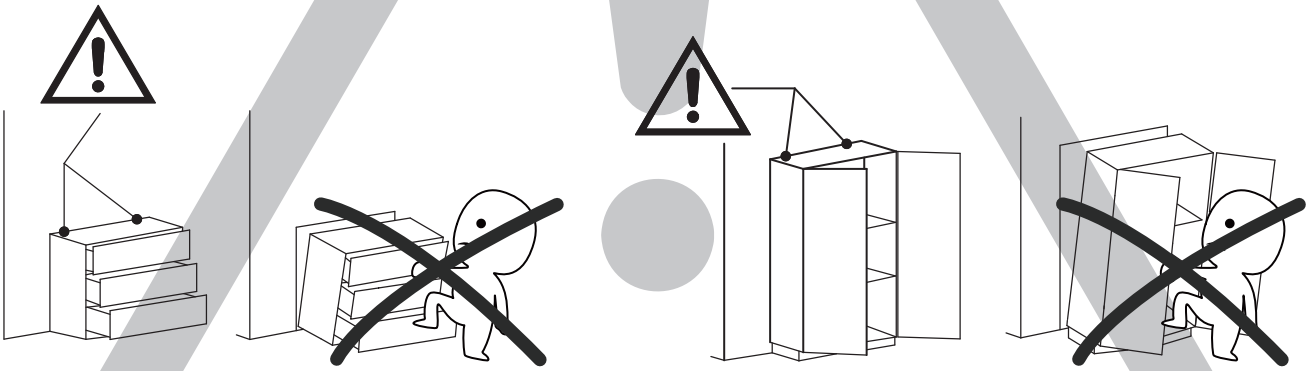

ANTI-TOPPLE WARNING !

Overturned furniture can cause serious or fatal crush injuries. To prevent tipping over, be sure to use the wall attachment, if not included with this product. Please purchase the wall attachment that fit your wall. If unsure, seek professional advice. Please read and follow each step of the instructions carefully.

IMPORTANT !

It is important that any product which is assembled using any kind of screw is re-tightened 2 weeks after assembly,and once every 3 months - in order to assure stability through-out the lifespan of the product.

For regular maintenance and cleaning of the product, for the frame, please use a rag dipped in neutral detergent to fully wipe it, and then dry it with a clean rag.For glass materials, wipe with a rag dampened with water glass cleaner, and then dry with a dry rag.

Do not use an electric screwdriver, and do not use too much force when installing, because the board is easy to break.

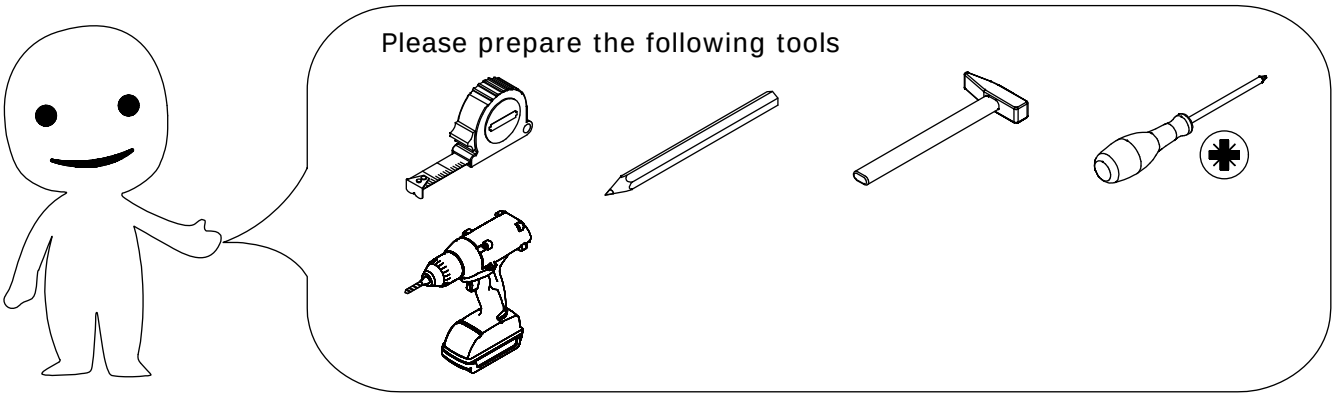

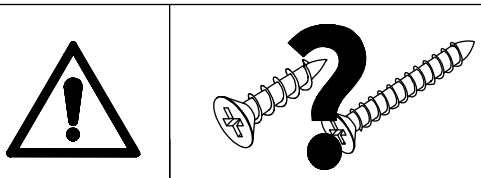

When installing, please carefully confirm whether each screw corresponds to the manual, accessories with similar shapes can be distinguished by size

A x 108	B x 108	C x 108	D x 82	E x 128
CRB1595A	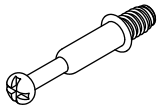 CRA0635B		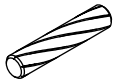 CRF0630A	CRD3512A
F x 140	**G x 8**	**H x 8**	**J x 44**	**K x 2**
CRD3514A	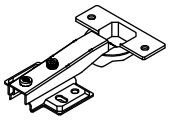 DGA861A		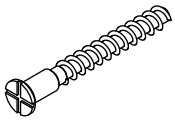 CRC0540A	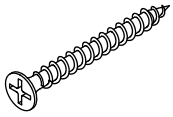 CRD3535A
L x 60	**M x 2**	**N x 12**	**P x 10**	**Q x 14**
CRE0316A	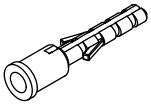	CRG0612A	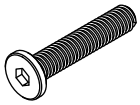 CRG0650A	CRG0630A
R x 4	**S x 8**	**T x 12**	**U x 2**	**V x 2**
	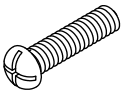 CRE0412A	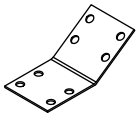	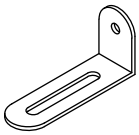	
W x 4	**X x 10**	**Y x 16**	**Z x 8**	**AA x 1**
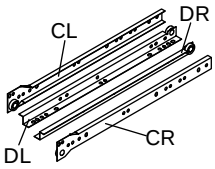 WX1014A	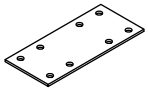	CRD3514A	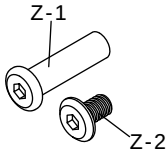	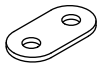

AB x 2

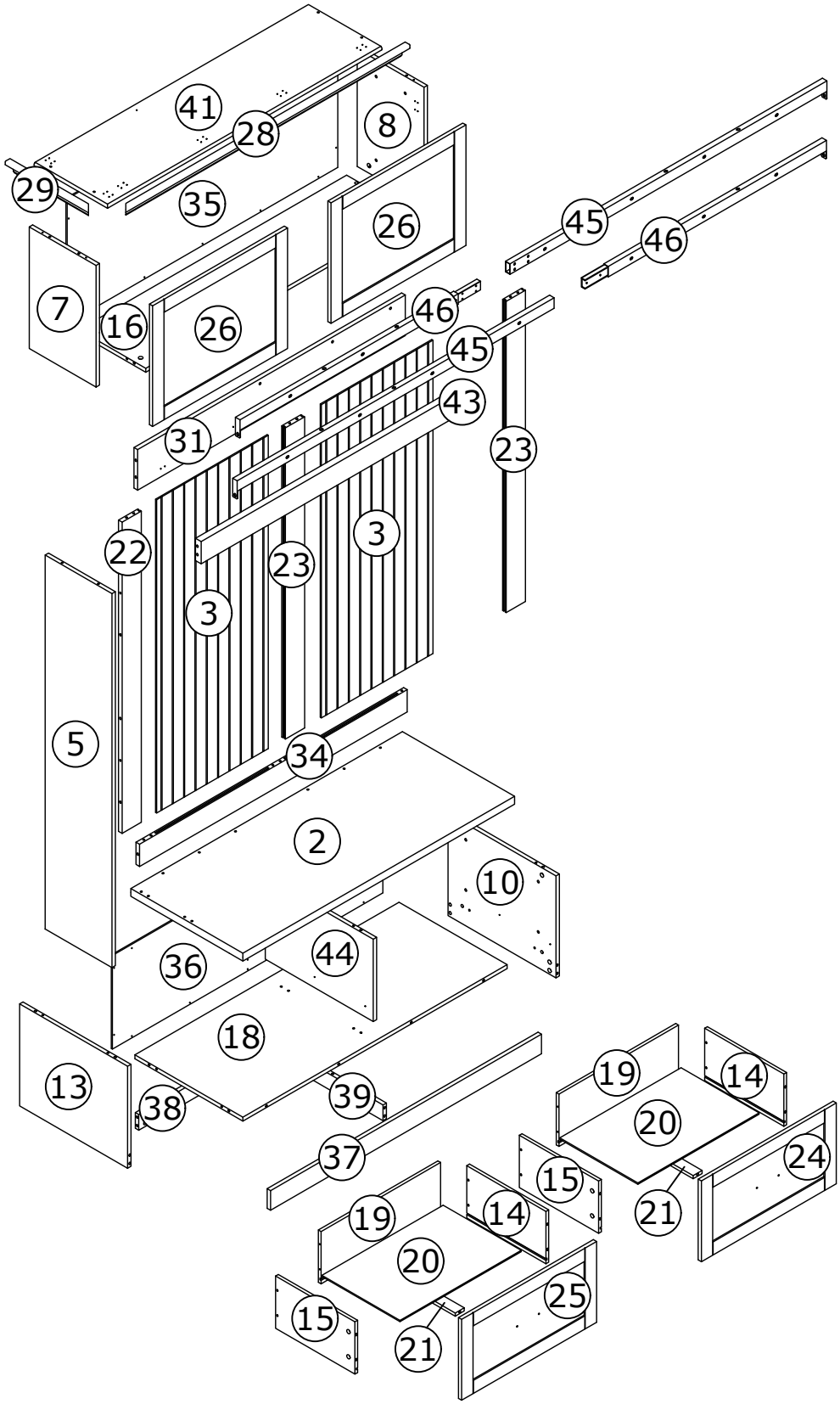
41
28
8
29
35
26
45
46
7
16
26
46
45
43
31
23
22
23
3
3
5
34
2
10
36
44
18
13
38
39
19
14
20
37
24
15
21
19
14
20
25
15
21

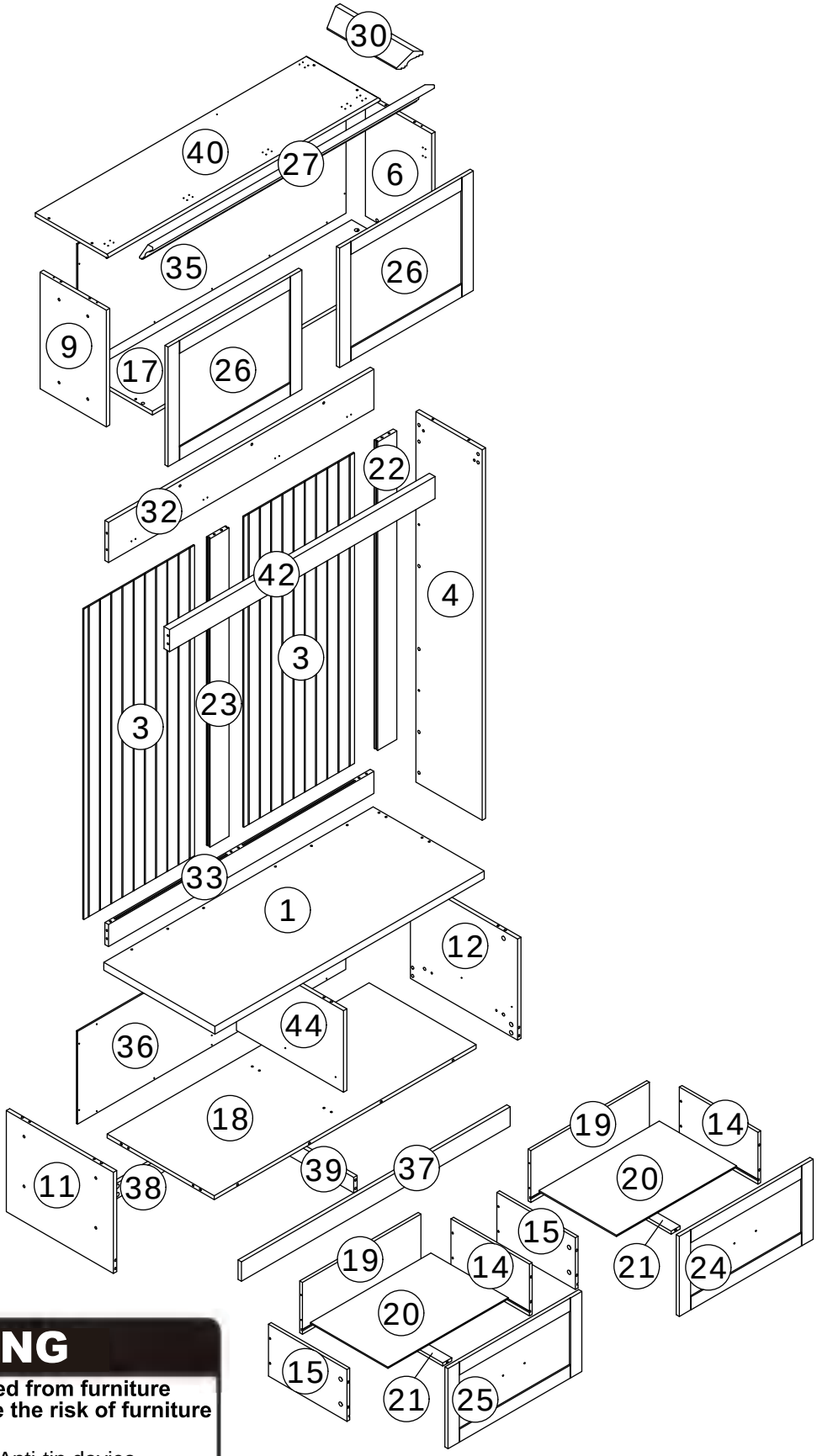

⚠WARNING

Children have died from furniture tipover.To reduce the risk of furniture tipover:

- ALWAYS install Anti-tip device provided.
- NEVER put a TV on this product.
- NEVER allow children to stand,climb or hang on drawers,doors,or shelves.
- NEVER open more than one drawer at a time.
- Place heaviest items in the lowest drawers.

This is a permanent label.
Do not remove!

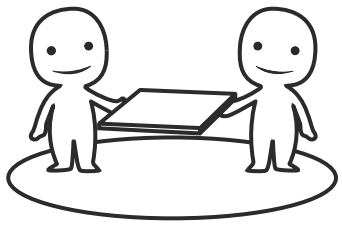

ASSEMBLED BY 2 ADULTS

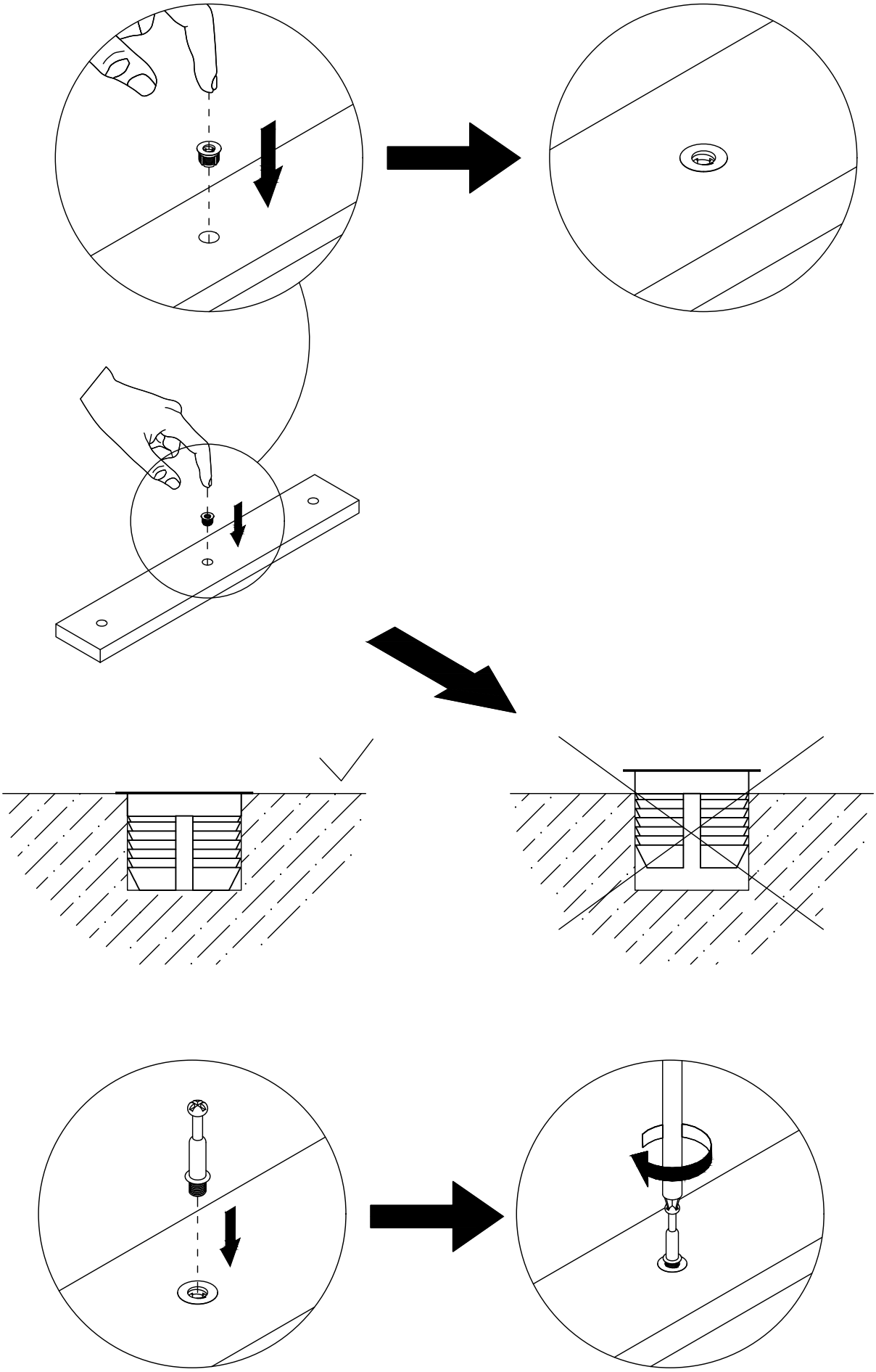

1

D x 2	F x 8	X x 1	
CRF0630A	CRD3514A		

	E	F	Y
	CRD3512A	CRD3514A	CRD3514A

Connect panel 31 to panel 32 using dowels (D).
Secure iron sheet (X) to panels 31 and 32 using screws (F).

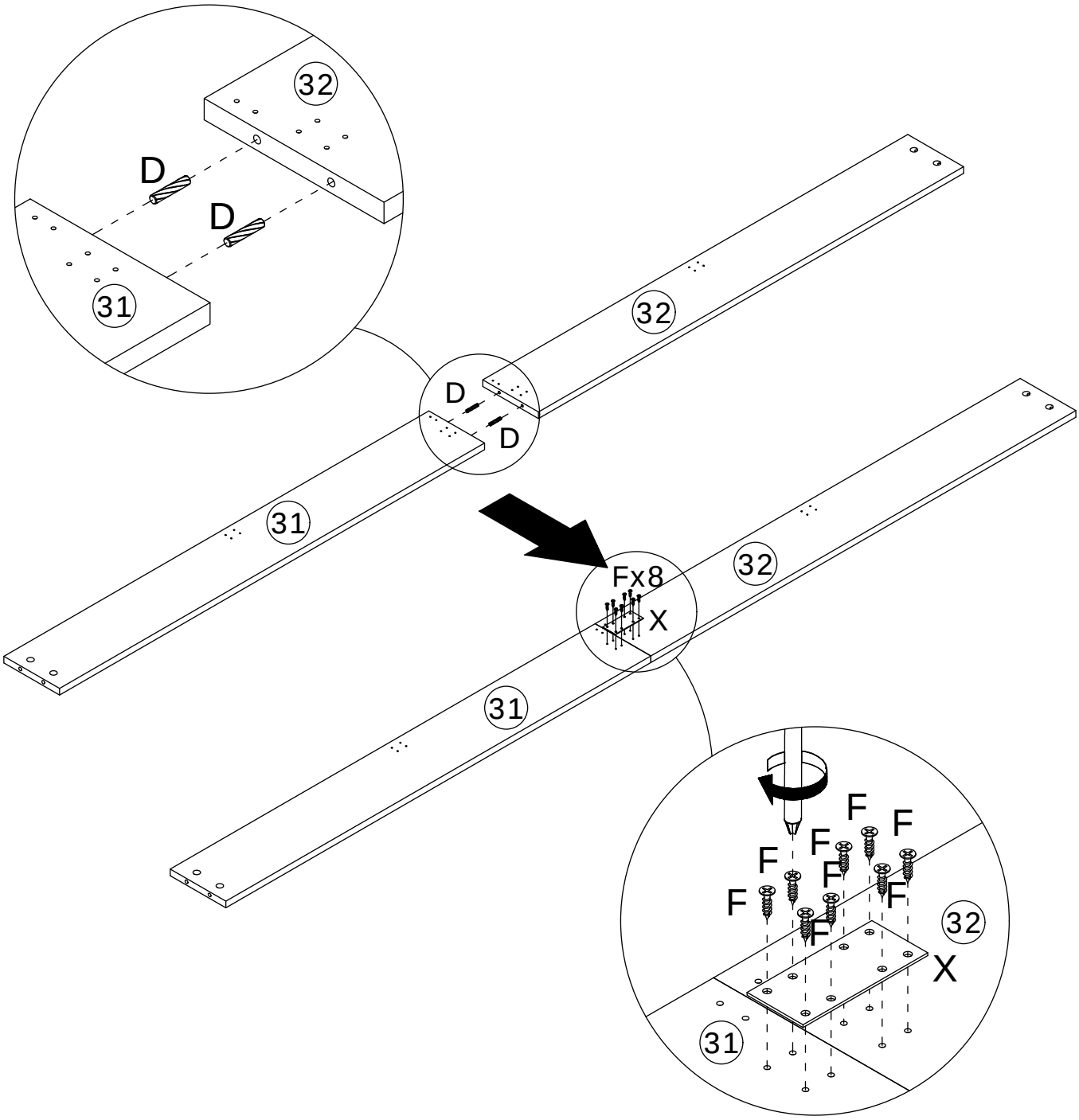

2

D x 6

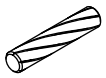

CRF0630A

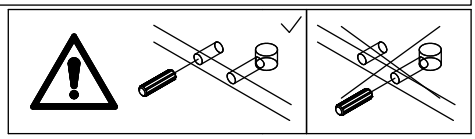

Connect panel 23 to panels 31 and 32 using dowels (D).

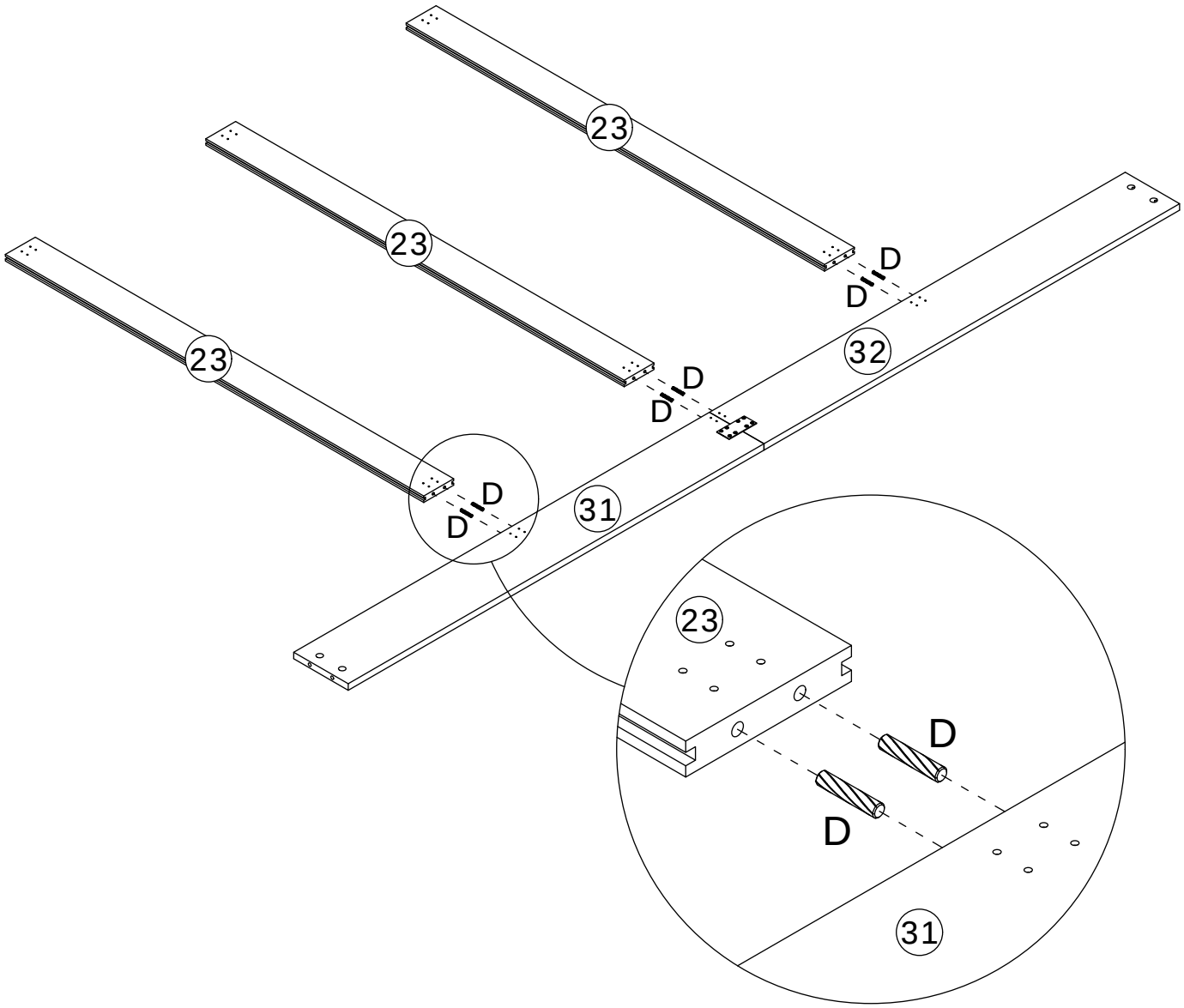

3

D x 4	F x 24	X x 3	
CRF0630A	CRD3514A		

	E	F	Y
	CRD3512A	CRD3514A	CRD3514A

Secure iron sheet (X) to panels 23, 31, and 32 using screws (F).
Connect panel 22 to panels 31 and 32 using dowels (D).

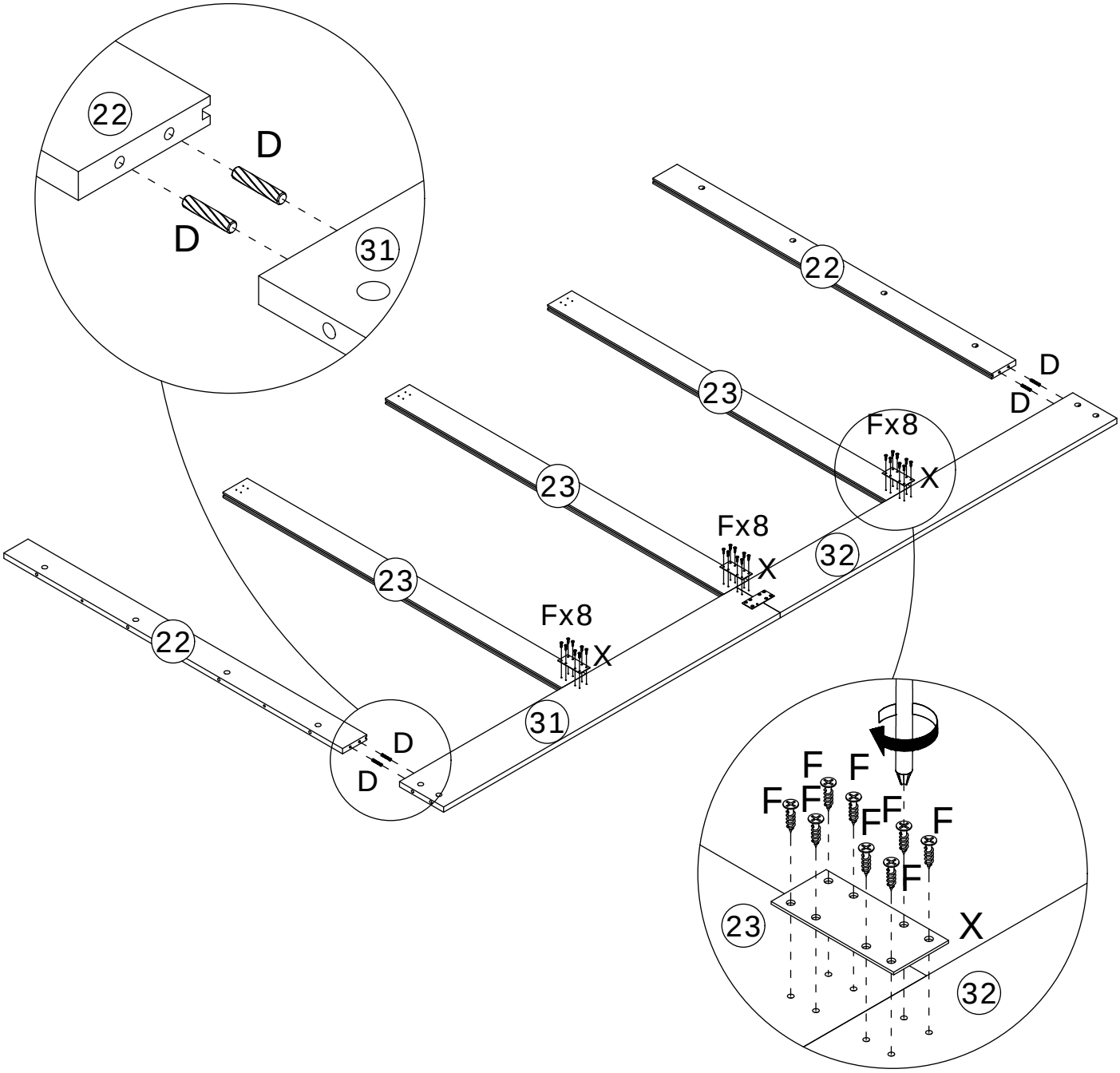

4

Insert panel 3 into the available slots.

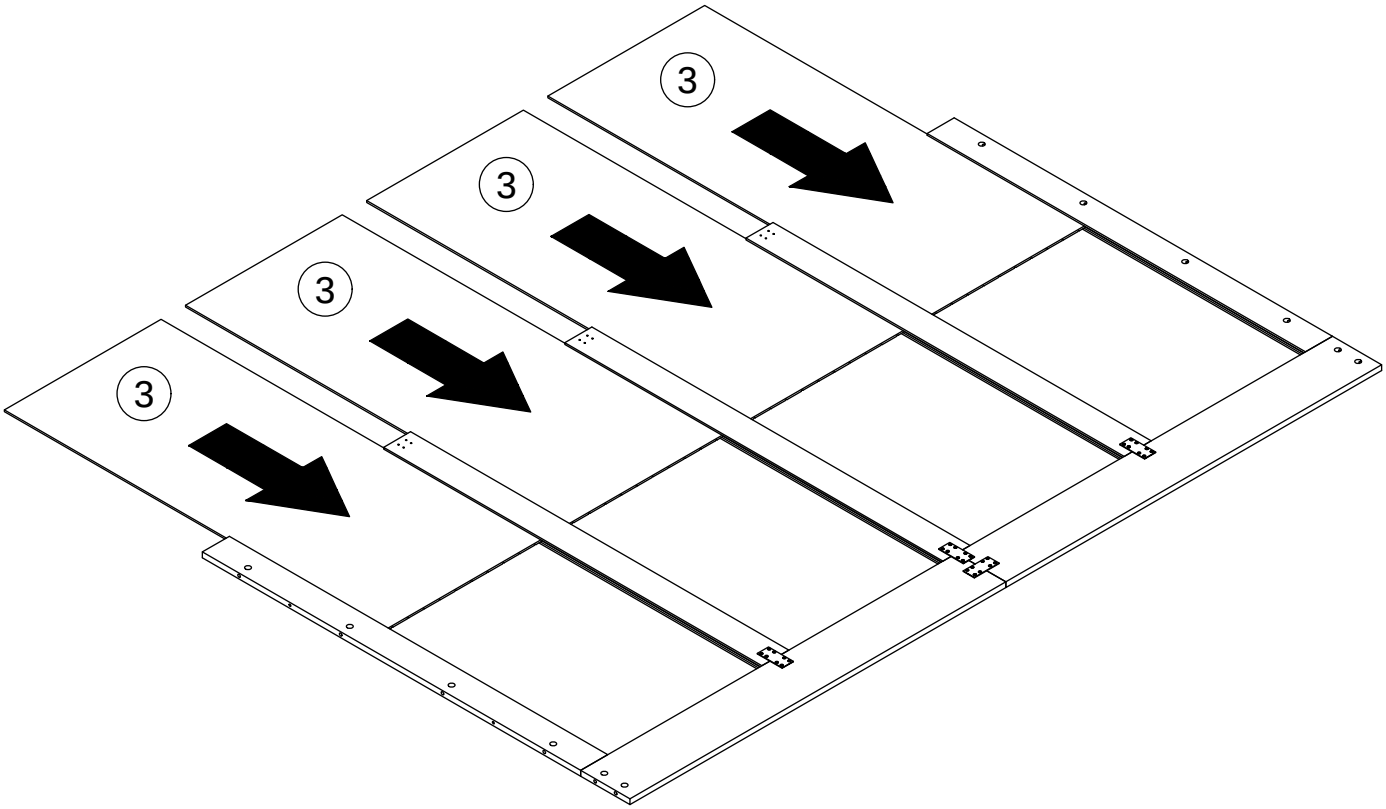

5

D x 12

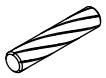

CRF0630A

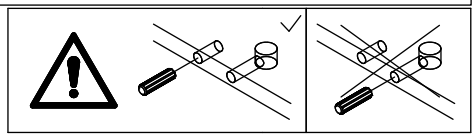

Connect panel 33 to panel 34 using dowels (D).
Insert dowels (D) into panels 22 and 23.

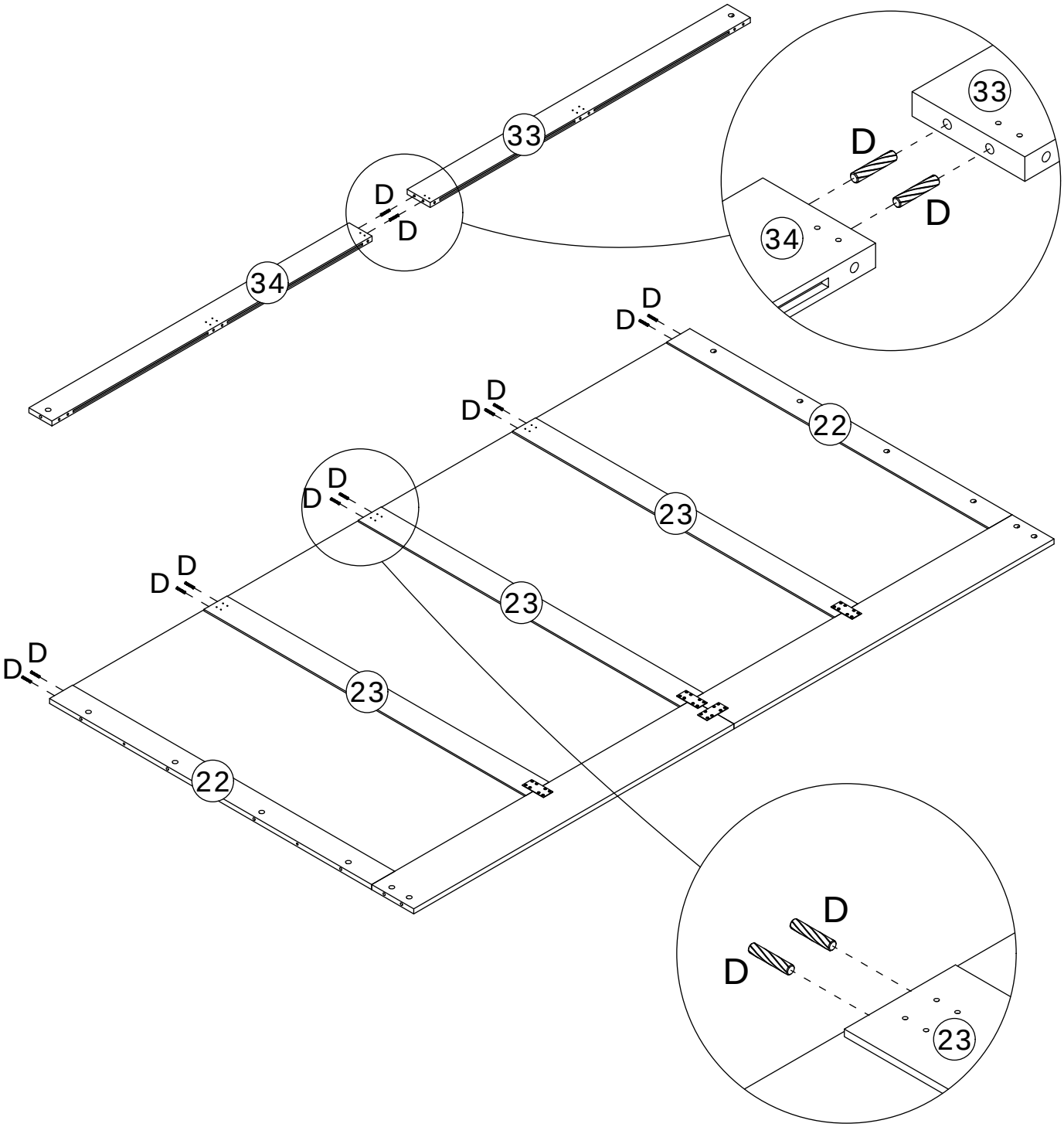

6

Connect panels 33 and 34 to panels 22 and 23.

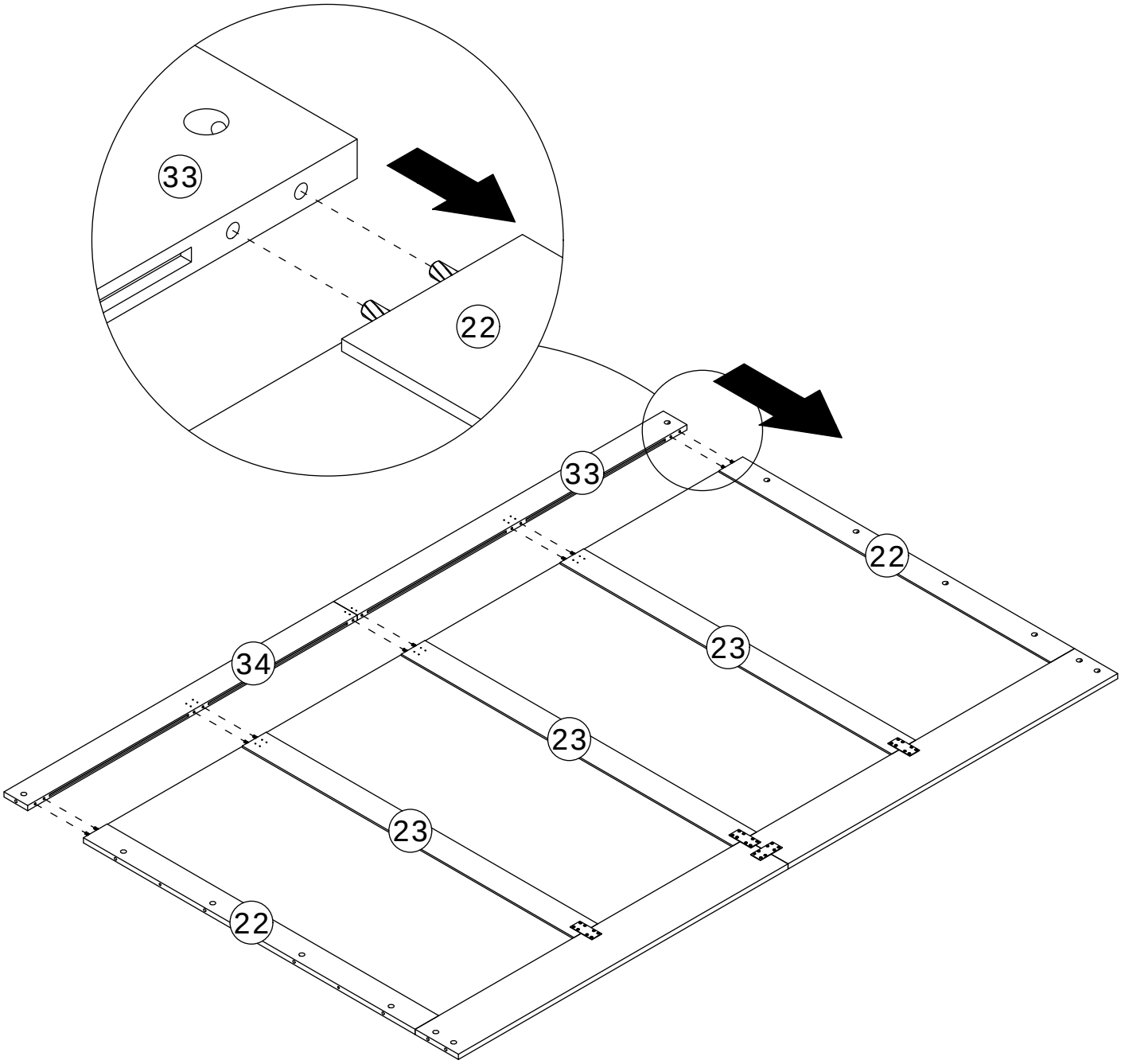

7

F x 24	X x 3	
CRD3514A		

	E	F	Y
	CRD3512A	CRD3514A	CRD3514A

Secure iron sheet (X) to panels 23, 33, and 34 using screws (F).

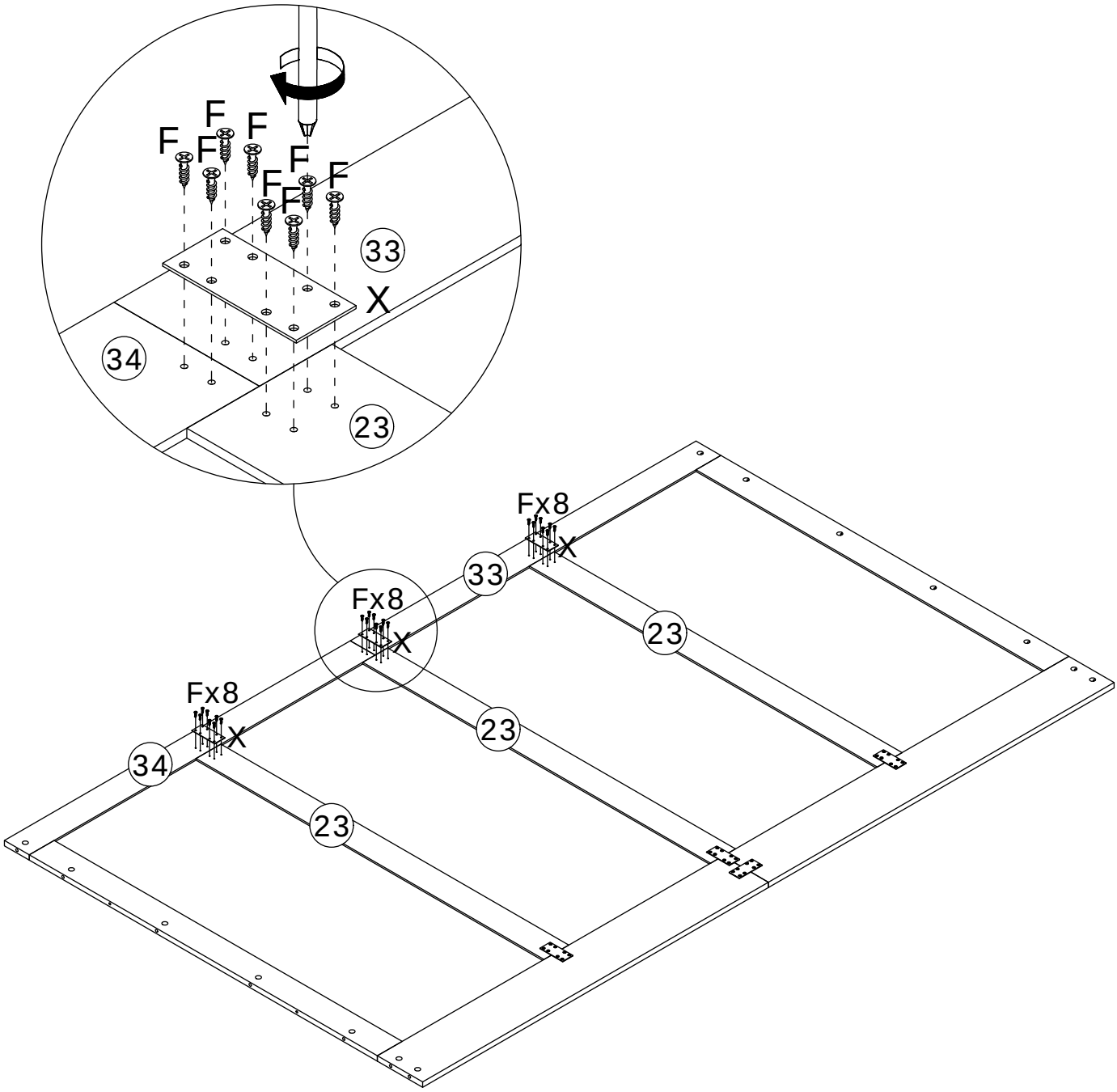

8

B x 18	C x 18	
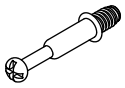 CRA0635B		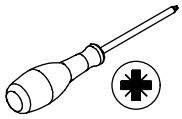

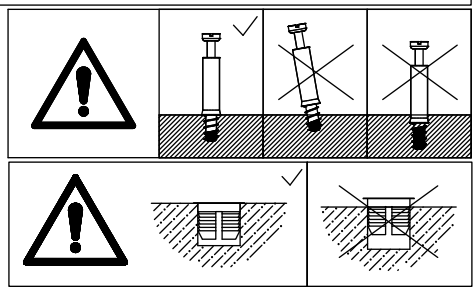

First install plugs (C) onto panels 4 and 5, then screw the self-tapping rods (B) into.

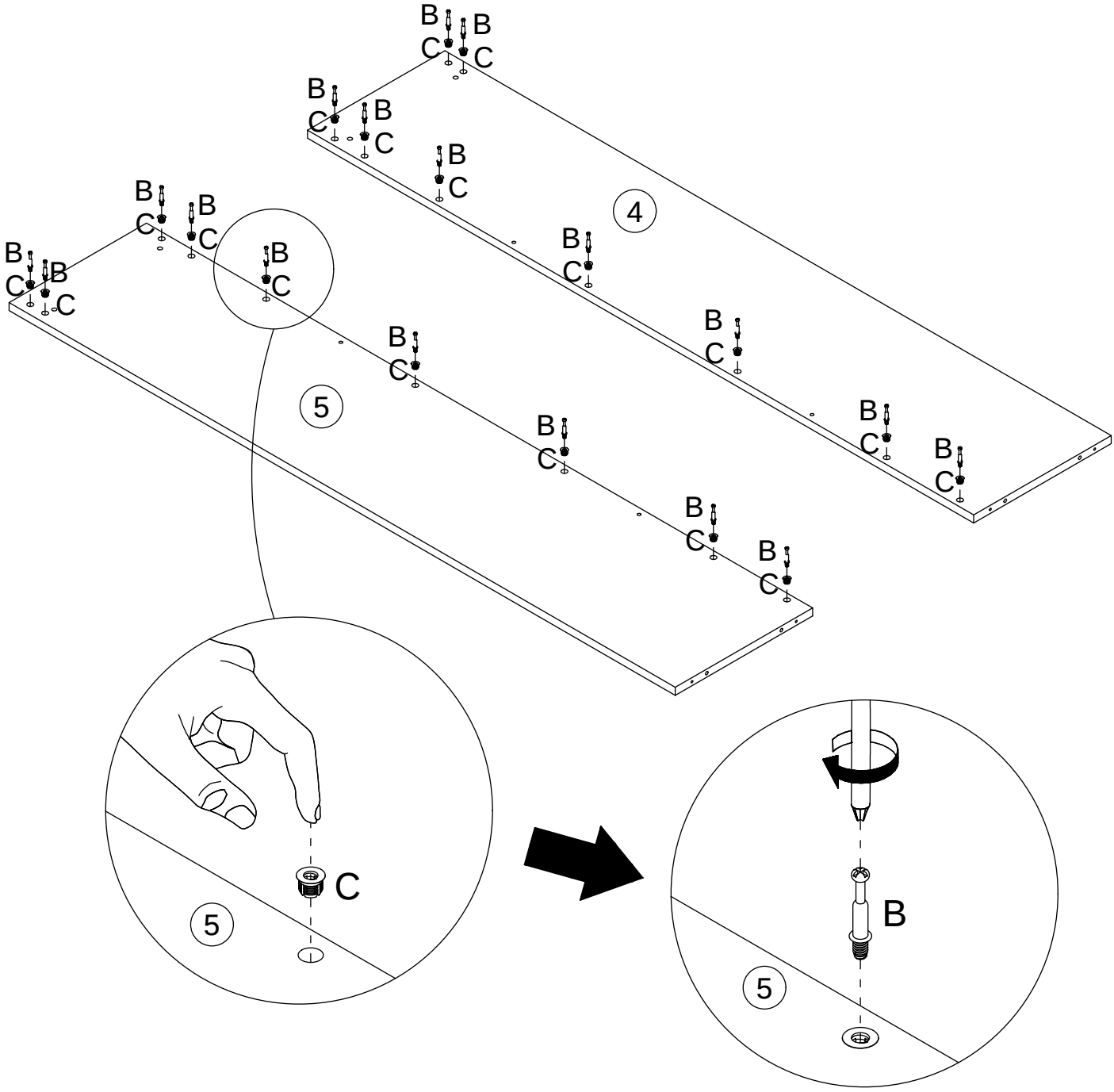

9

A x 7	D x 2	
	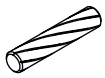	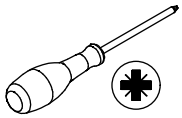
CRB1595A	CRF0630A	

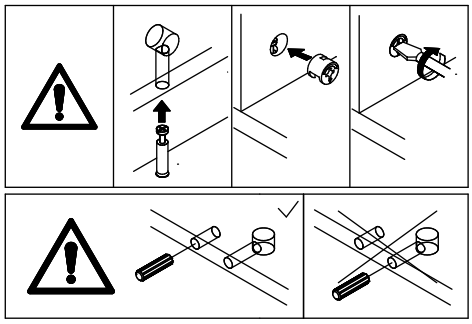

Attach panel 5 to panels 34, 22, and 31 using dowels (D), then tighten by turning cam locks (A) clockwise.

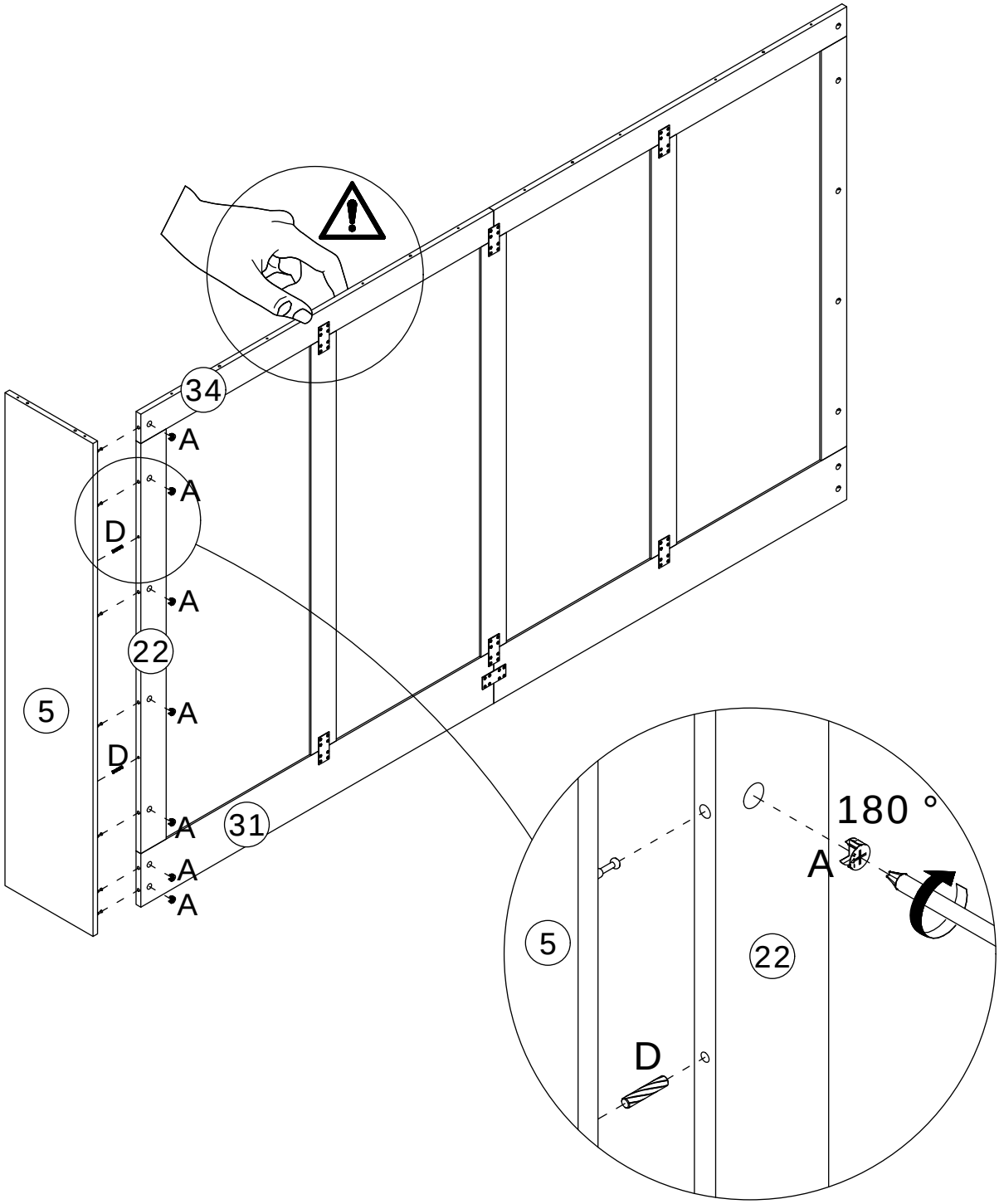

10

D x 2	F x 8	X x 1
CRF0630A	CRD3514A	

E	F	Y
CRD3512A	CRD3514A	CRD3514A

Connect panel 42 to panel 43 using dowels (D).
Secure iron sheet (X) to panels 42 and 43 using screws (F).

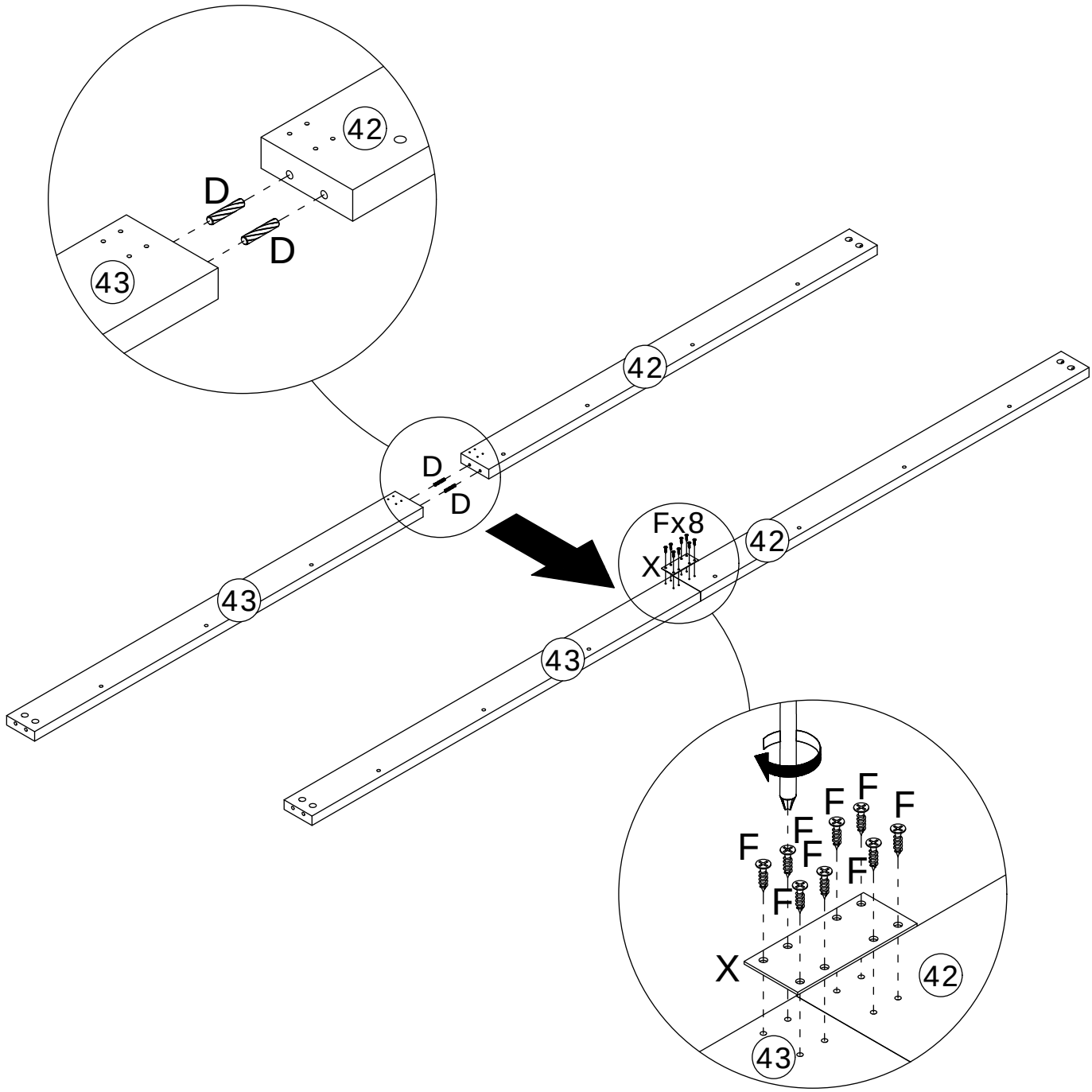

11

A x 2

CRB1595A

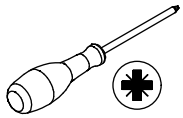

Connect panel 43 to panel 5, then tighten by turning cam locks (A) clockwise.

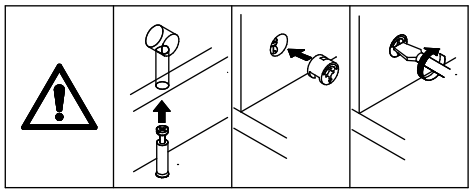

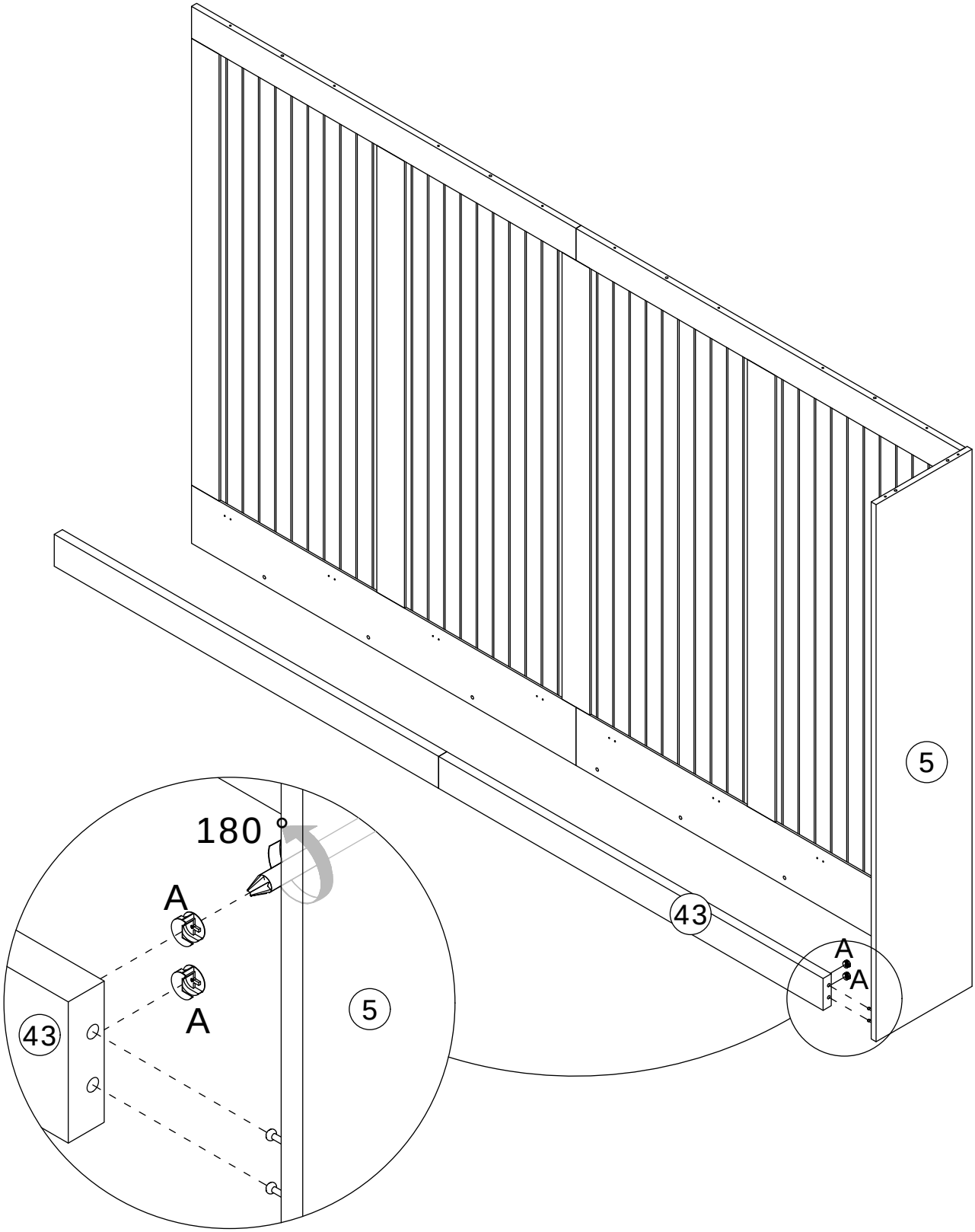

12

A x 9	D x 2	
CRB1595A	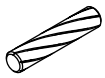 CRF0630A	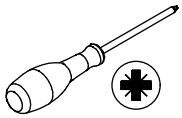

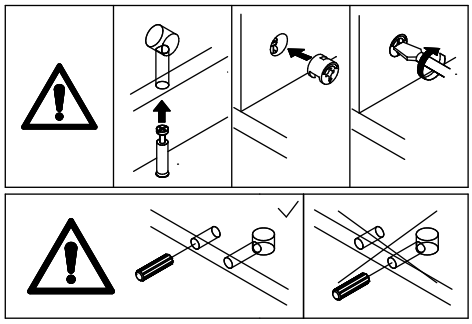

Attach panel 4 to panels 33, 22, 32, and 42 using dowels (D), then tighten by turning cam locks (A) clockwise.

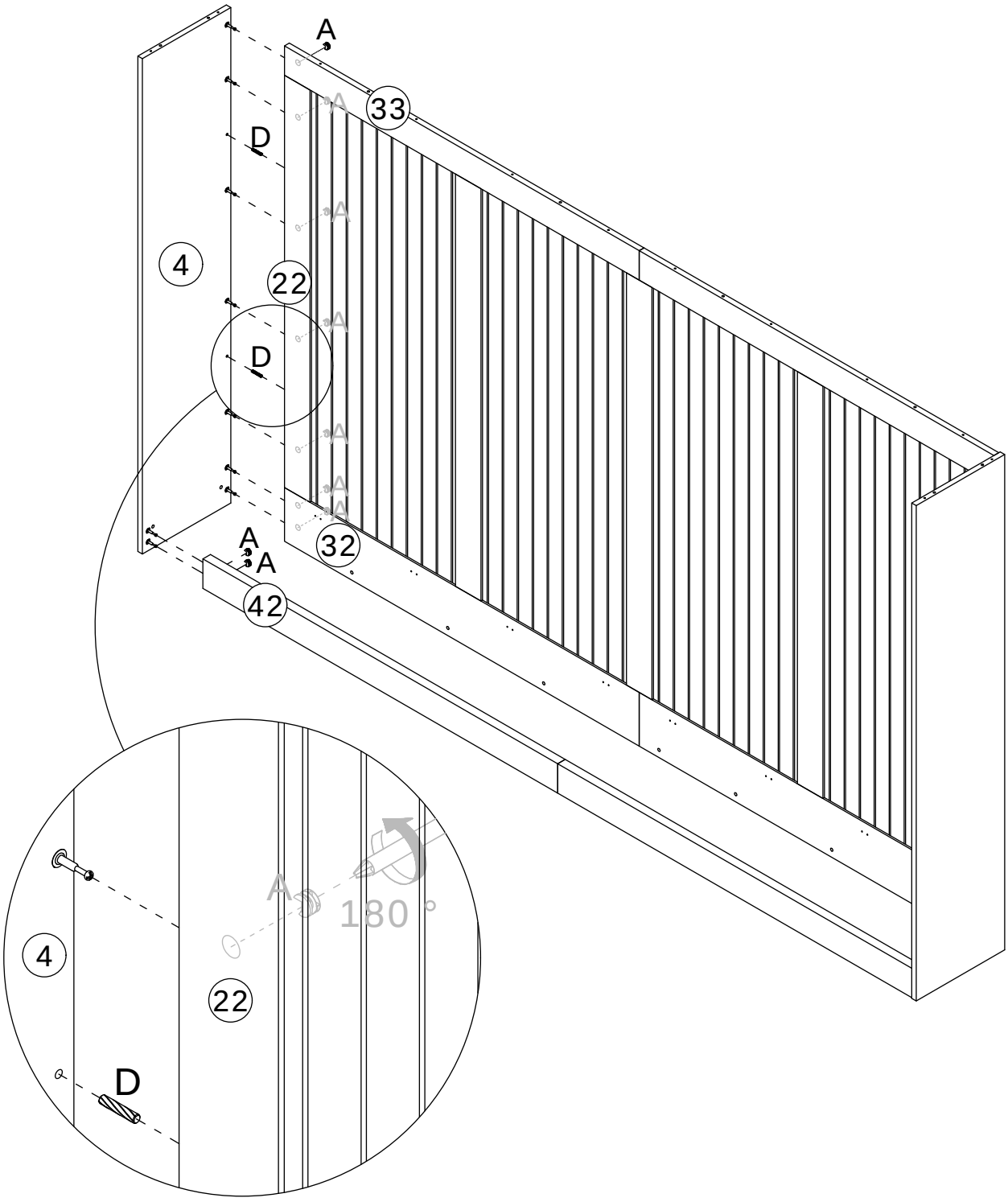

13

N x 8	AB x 1	
CRG0612A		

Secure part (46) and part (45) using screws (N).

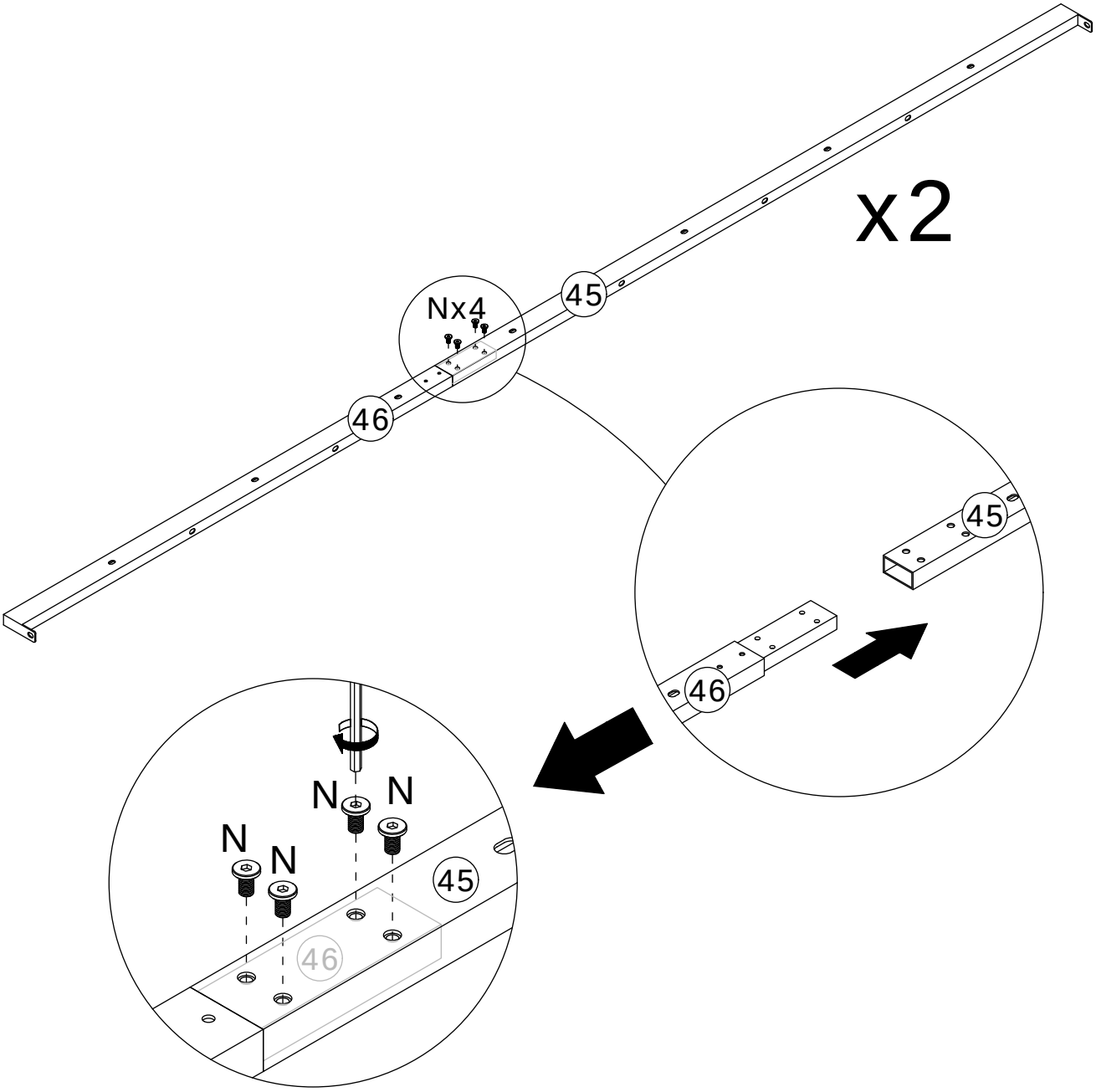

14

Q x 7	AB x 1	
CRG0630A		

Mount part (45) to panels 42 and 43, and part (46) to panel 42 using screws (Q).

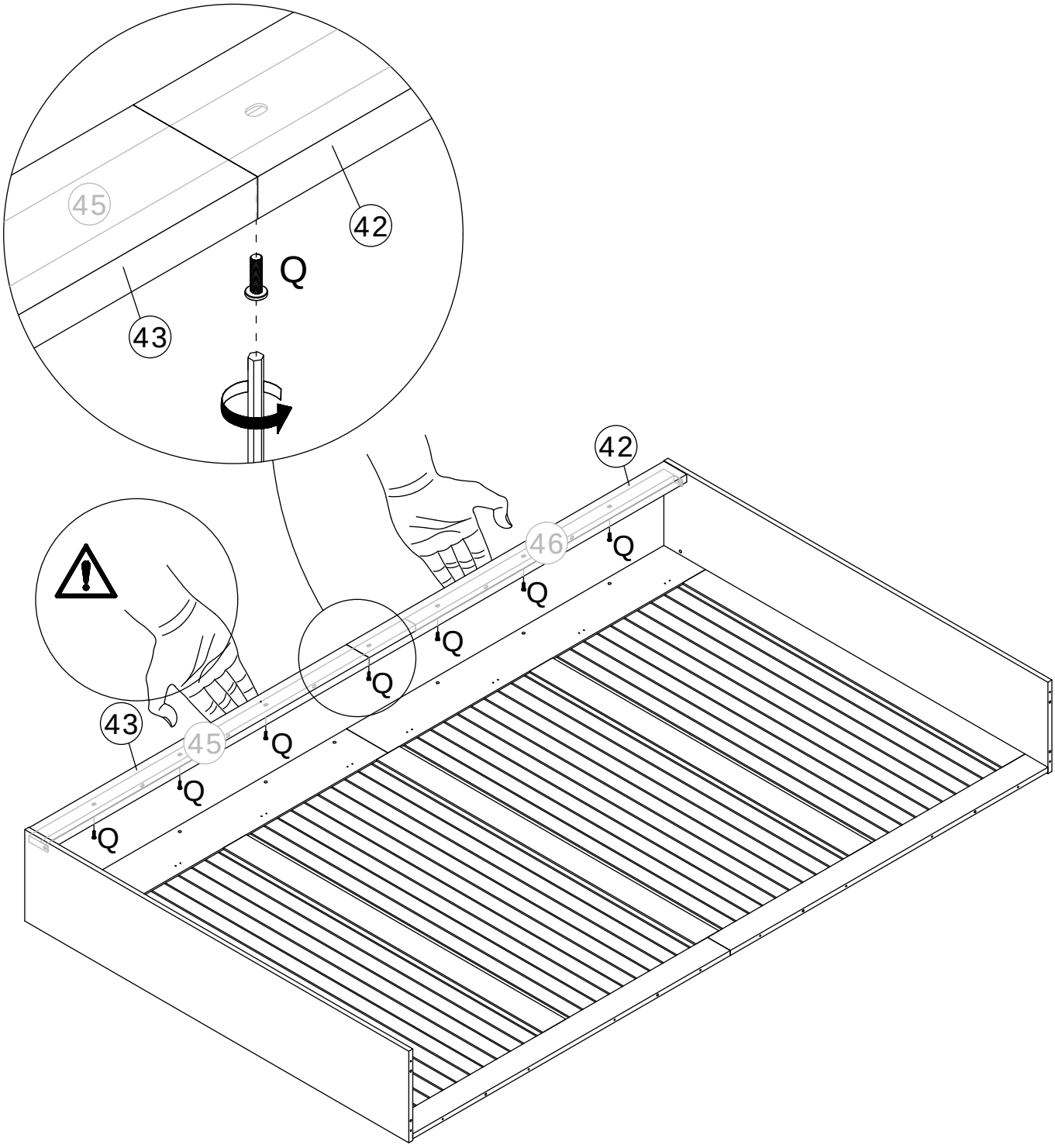

15

N x 2	AB x 1	
CRG0612A		

Mount part (46) to panel 4, and part (45) to panel 5 using screws (N).

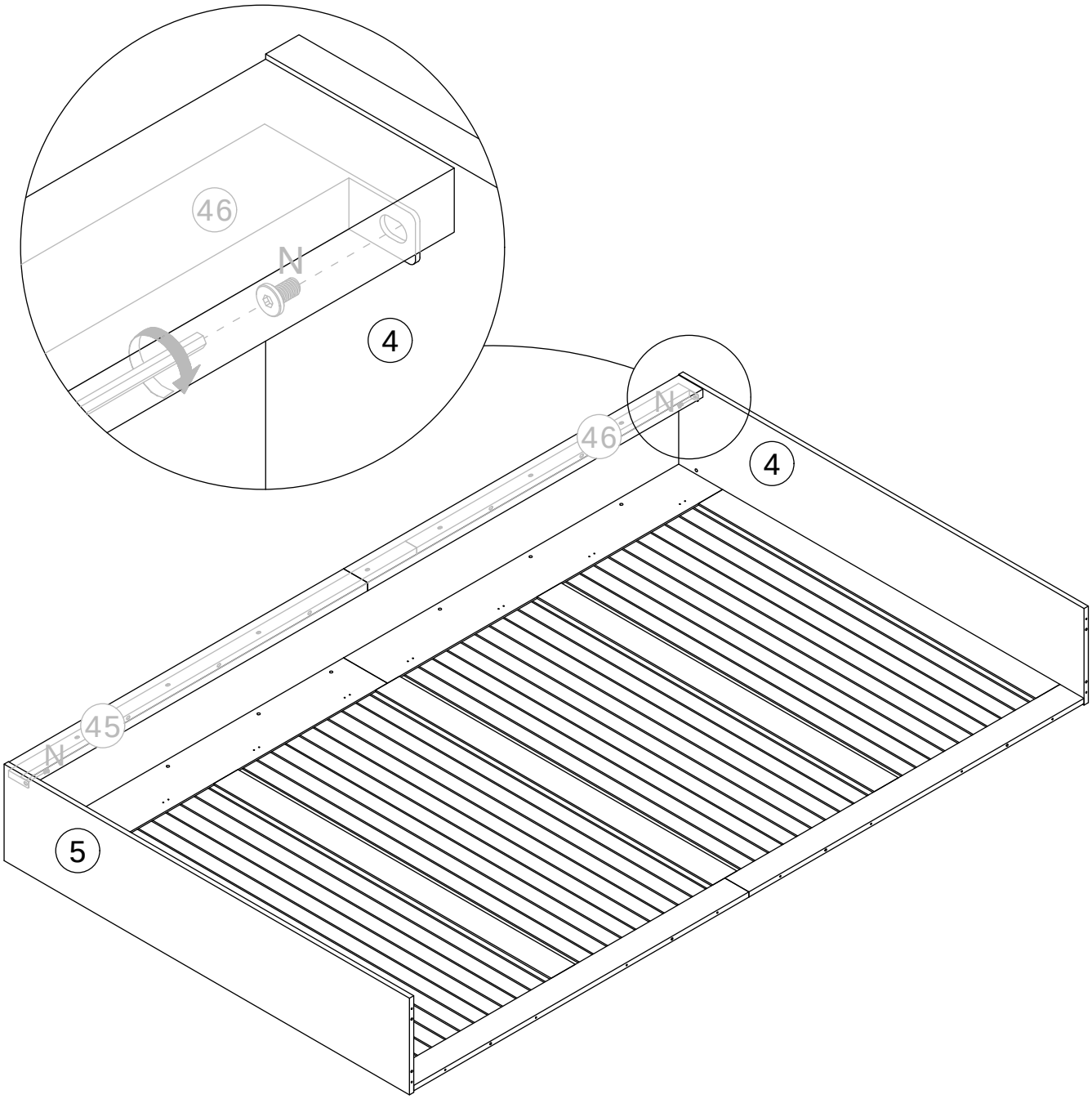

16

Q x 7	AB x 1	
CRG0630A		

Mount part (45) to panels 31 and 32, and part (46) to panel 31 using screws (Q).

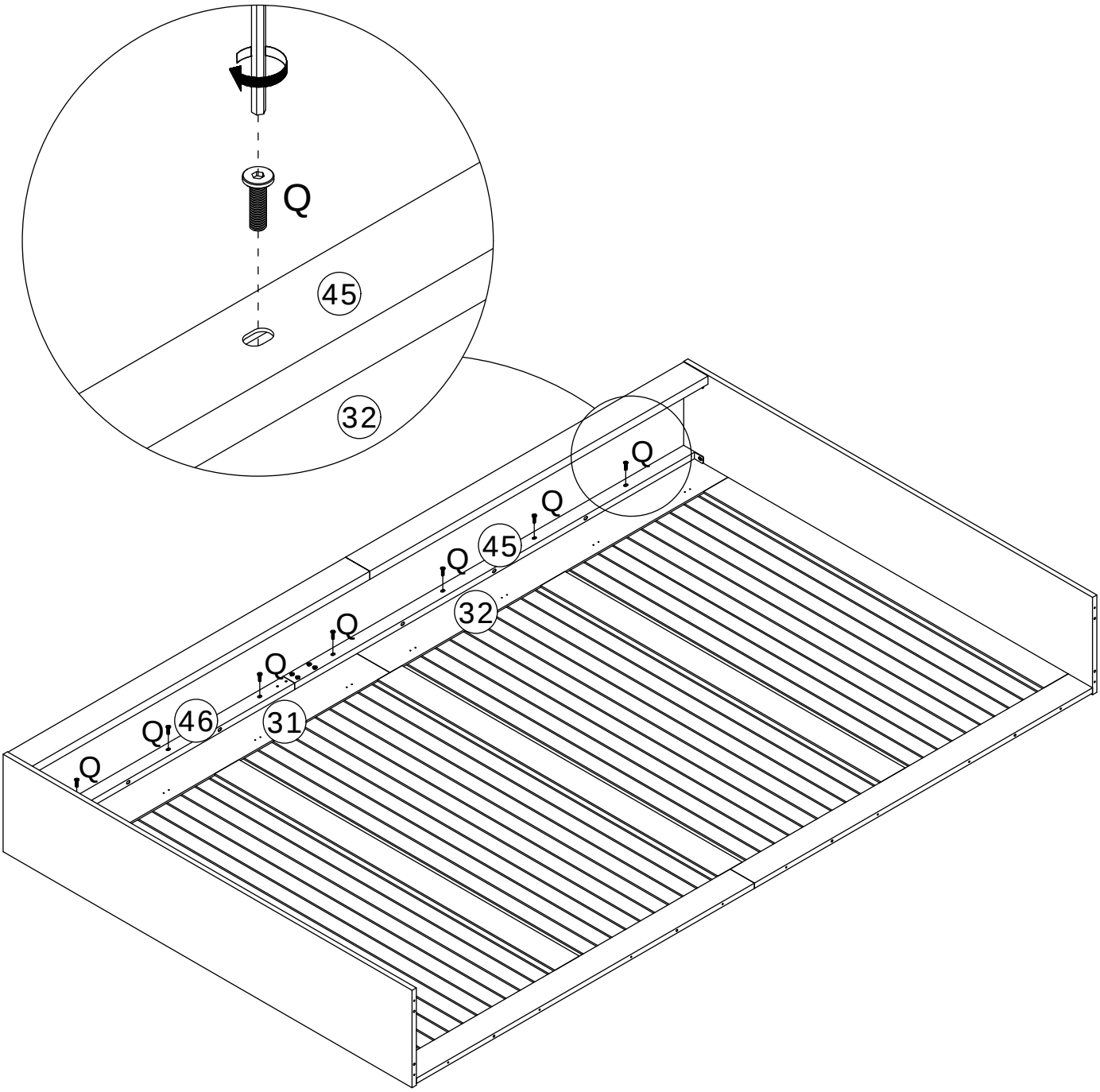

17

N x 2	AB x 1	
CRG0612A		

Mount part (45) to panel 4, and part (46) to panel 5 using screws (N).

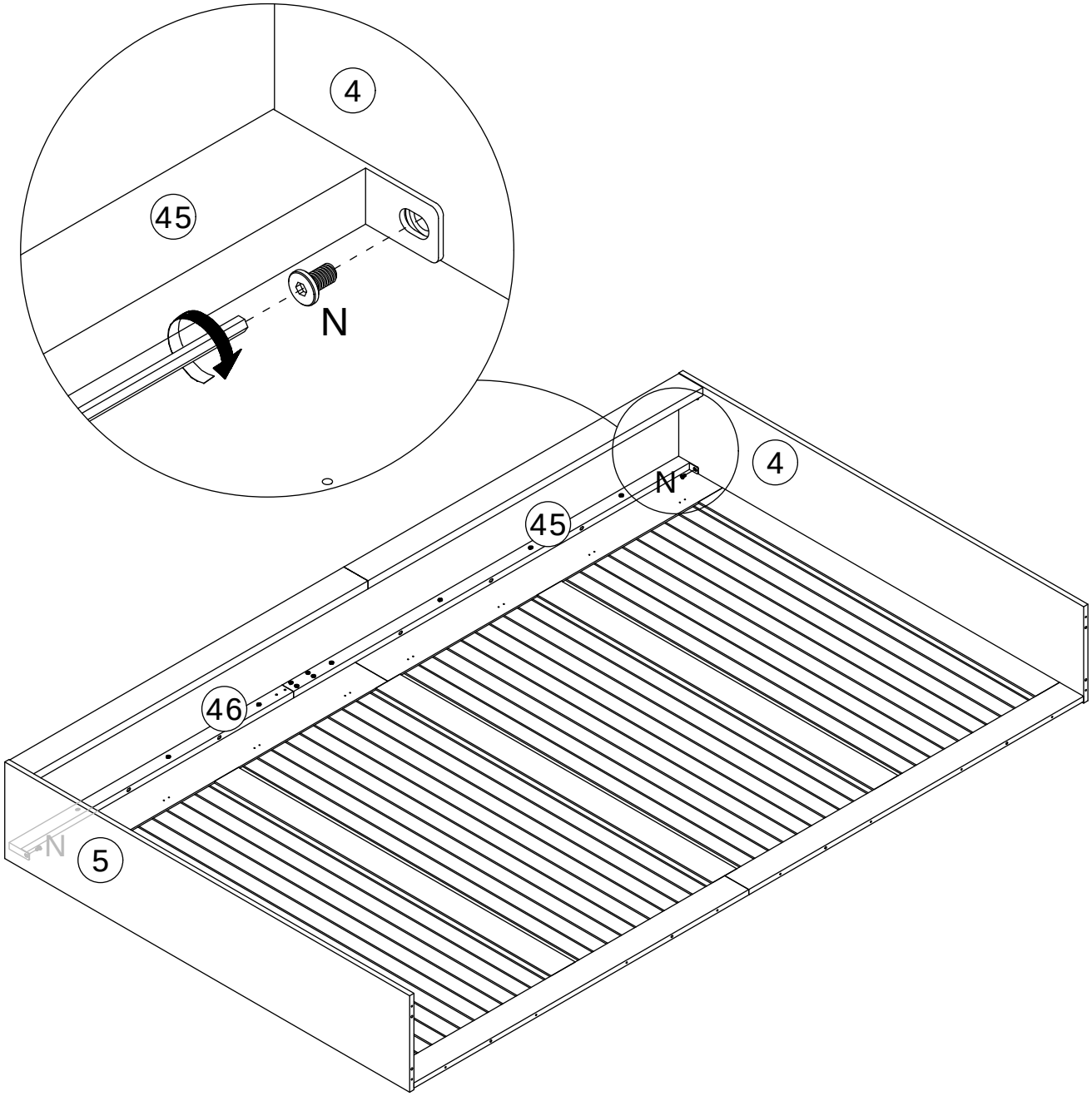

18

B x 4	C x 4	
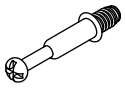 CRA0635B		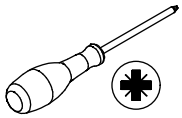

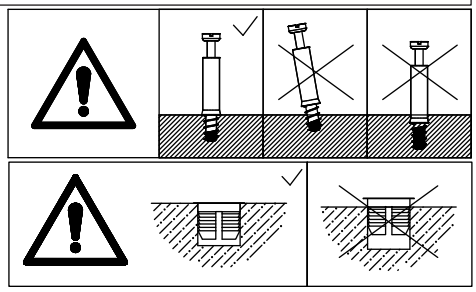

First install plugs (C) onto panels 16 and 17, then screw the self-tapping rods (B) into.

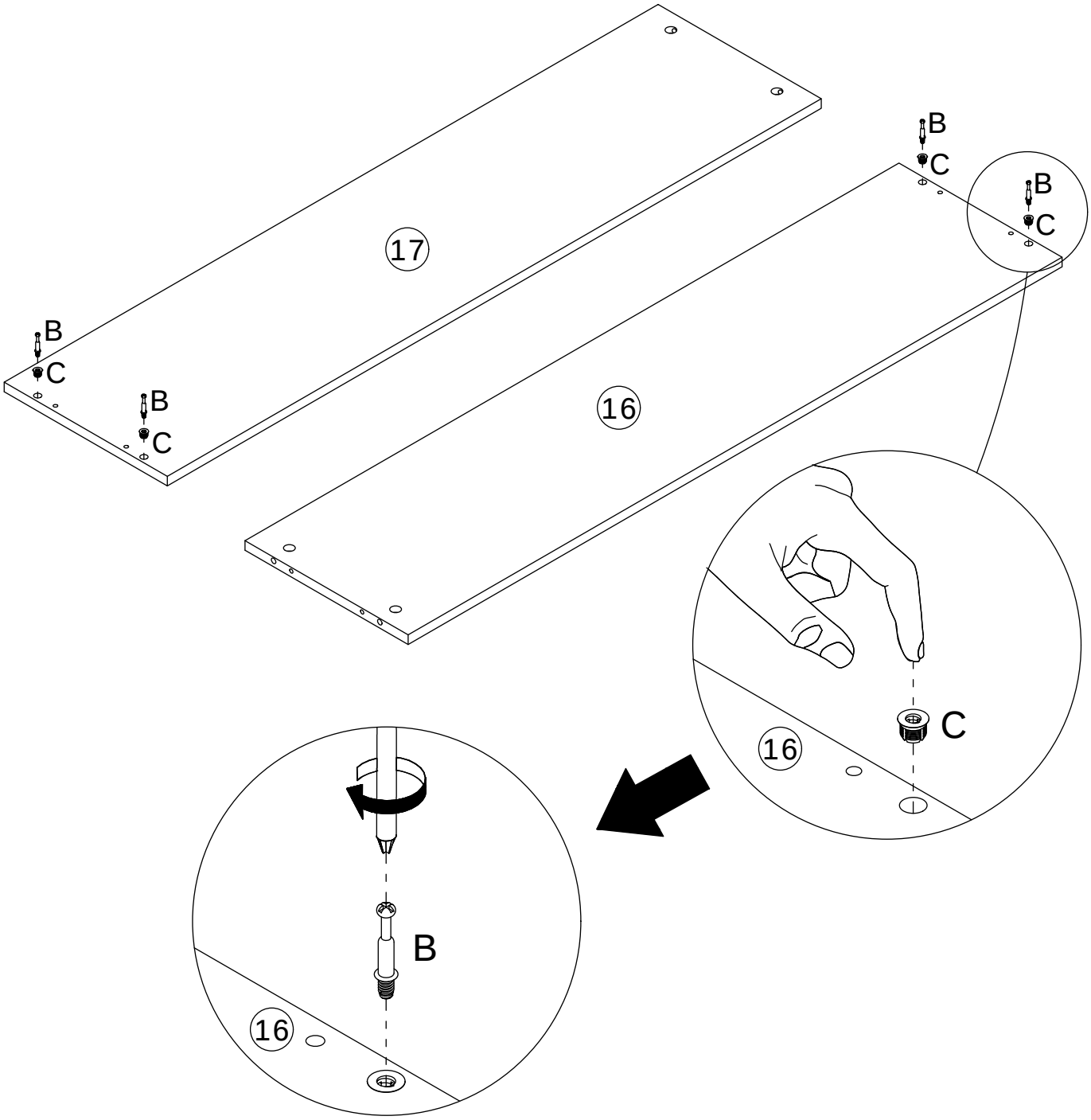

19

B x 4	C x 4	
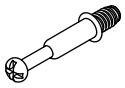 CRA0635B		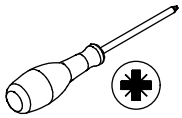

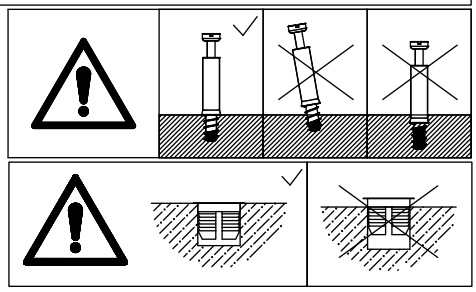

First install plugs (C) onto panels 6 and 7, then screw the self-tapping rods (B) into.

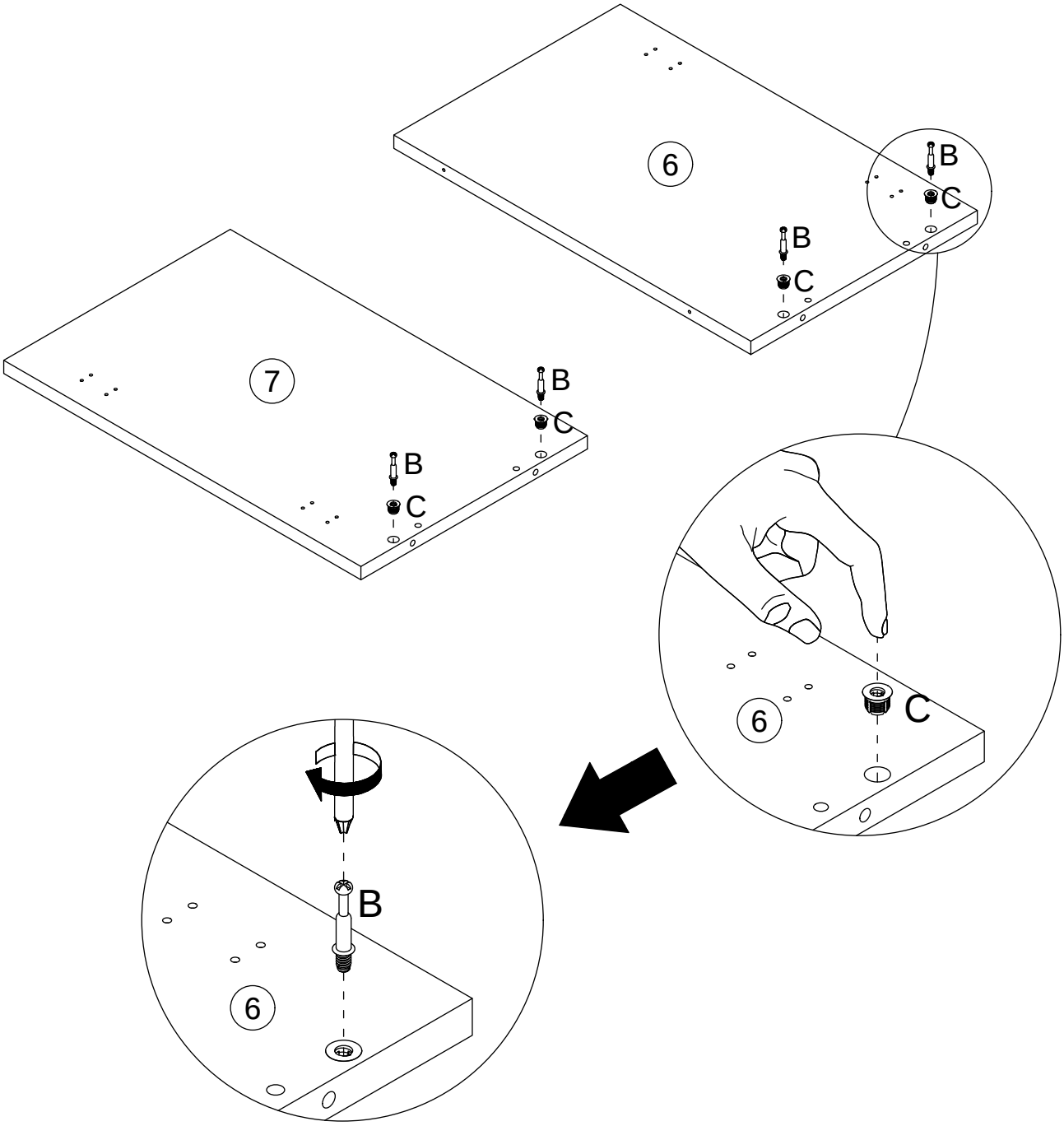

20

A x 4	D x 4	
CRB1595A	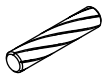 CRF0630A	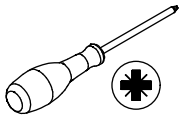

Connect panels 7 and 8 to panel 16 using dowels (D), then tighten by turning cam locks (A) clockwise.

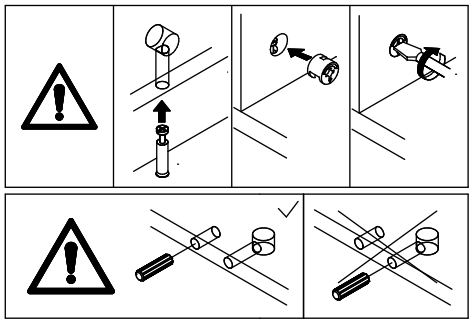

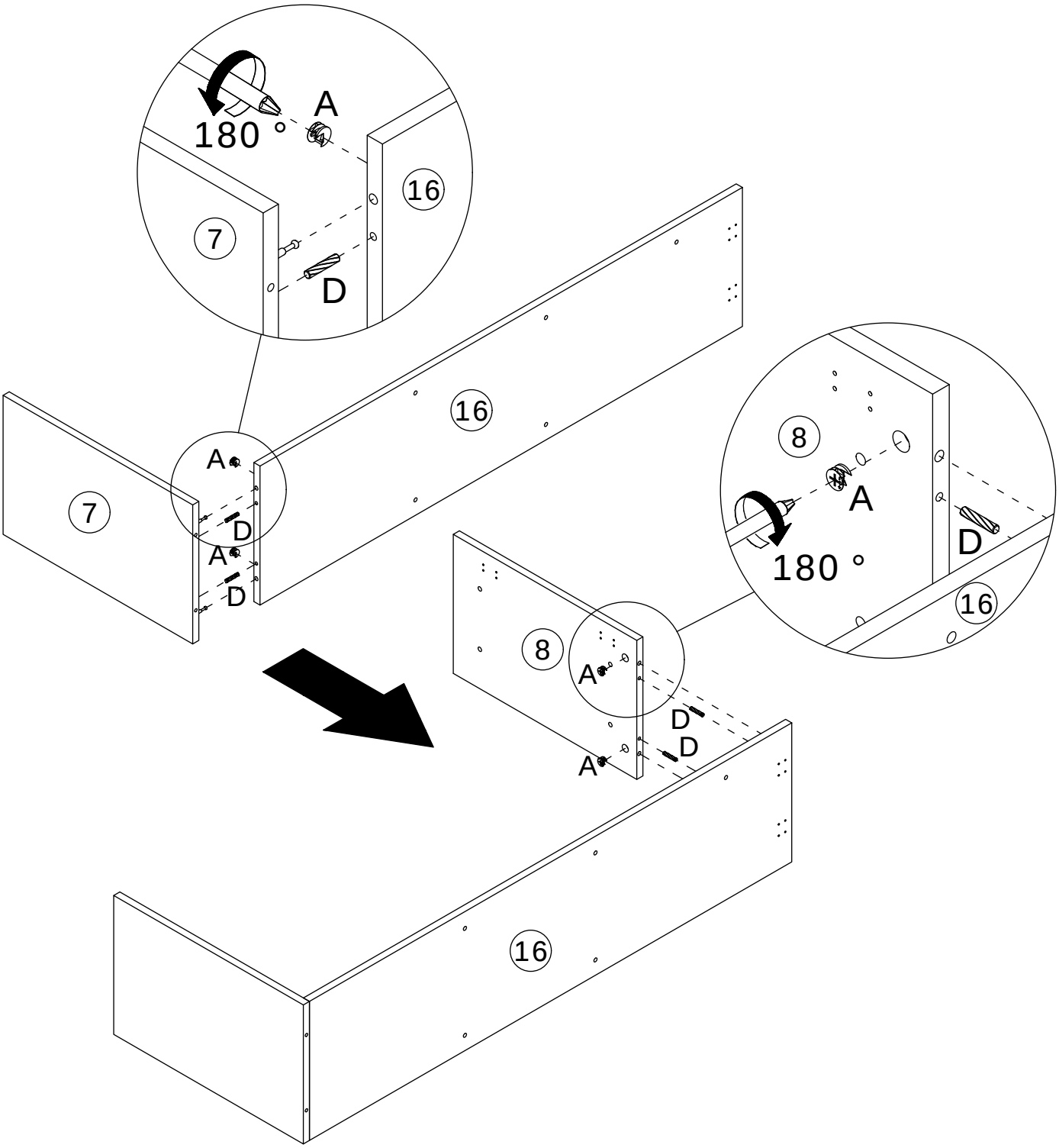

21

A x 4	D x 4	
CRB1595A	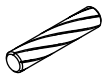 CRF0630A	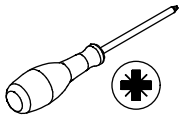

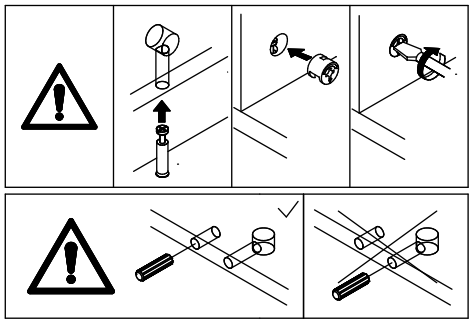

Connect panels 6 and 9 to panel 17 using dowels (D), then tighten by turning cam locks (A) clockwise.

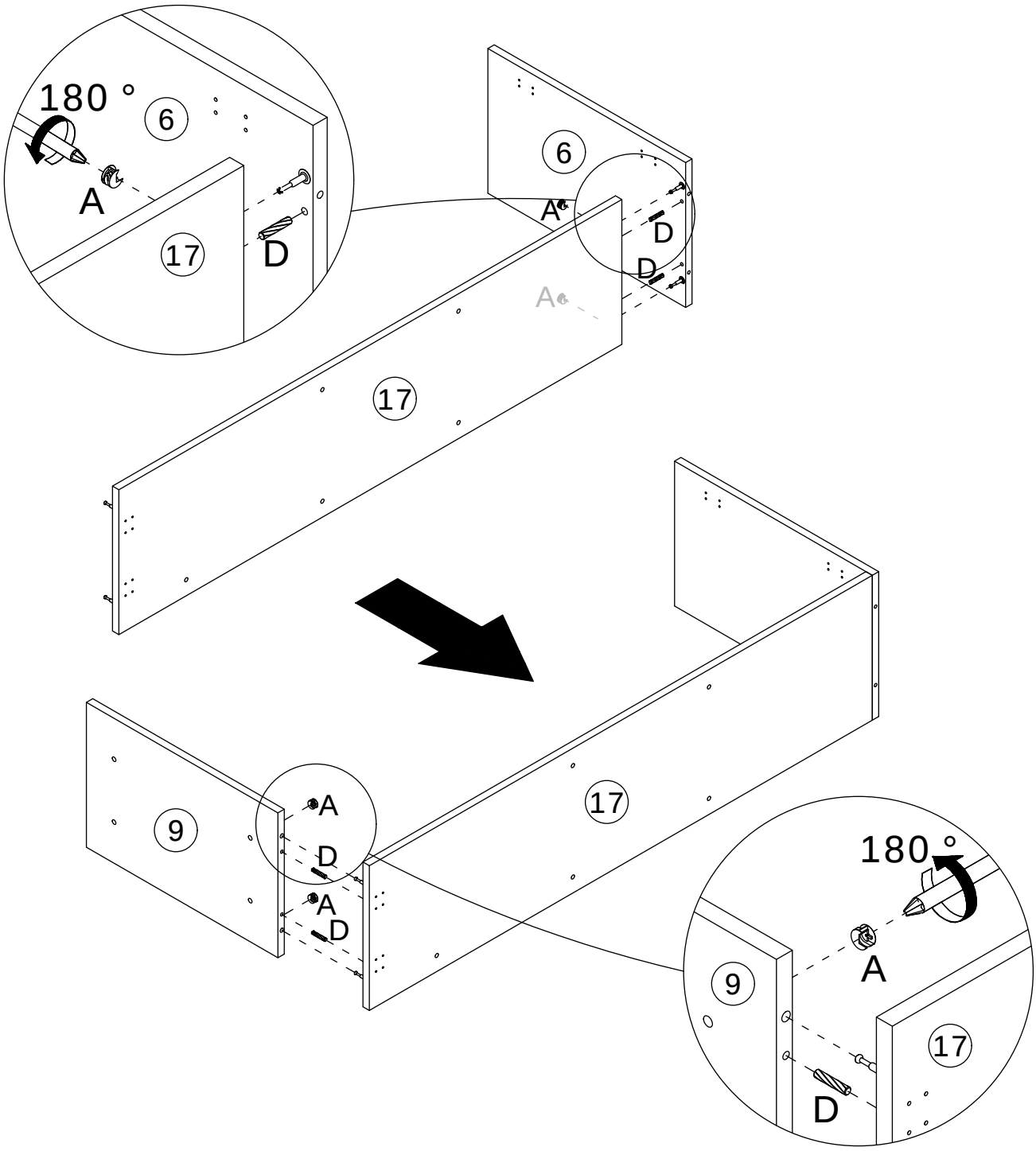

22

D x 4	J x 4	
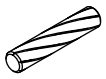 CRF0630A	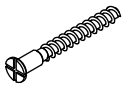 CRC0540A	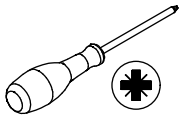

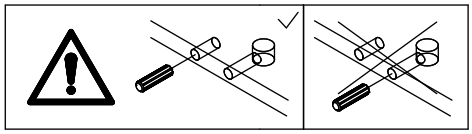

Attach panel 41 to panels 7 and 8 using dowels (D), and secure with screws (J).

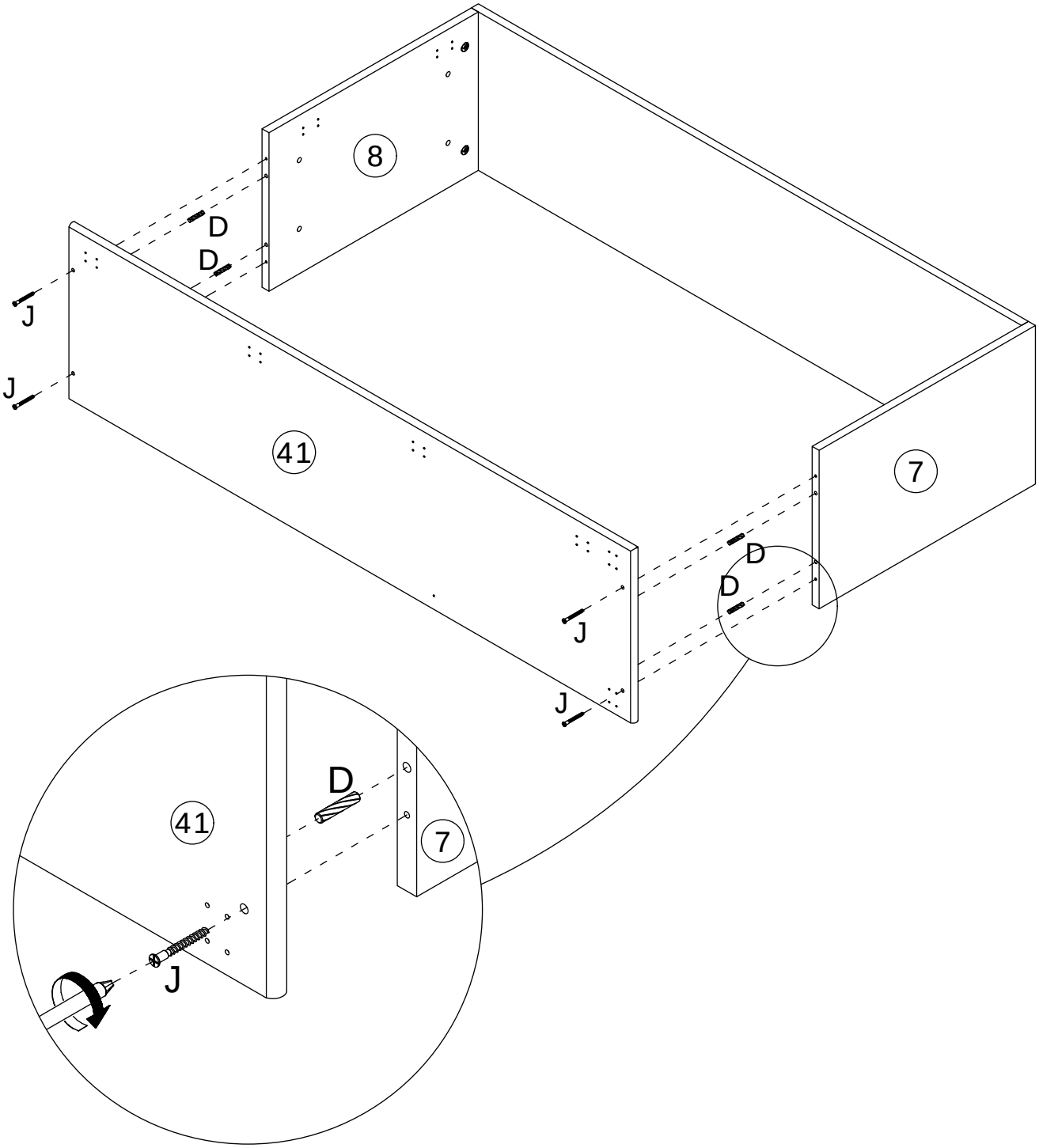

23

D x 4	J x 4	
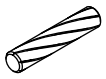 CRF0630A	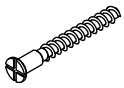 CRC0540A	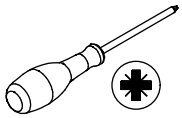

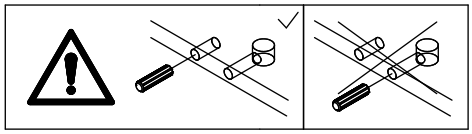

Attach panel 40 to panels 6 and 9 using dowels (D), and secure with screws (J).

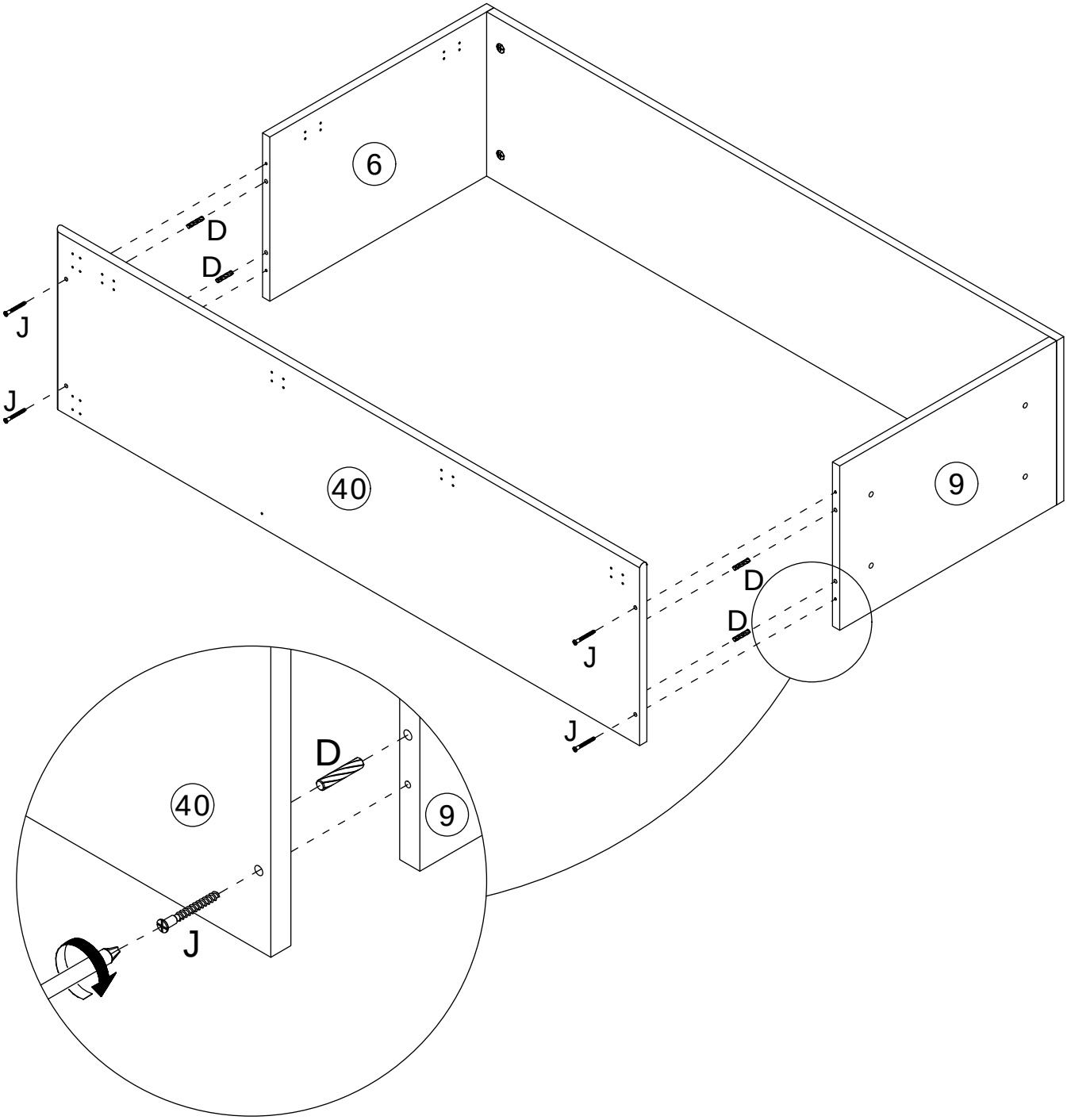

24

Z x 4	AB x 2	
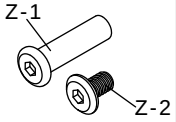		

Secure panels 8 and 9 using screws (Z).

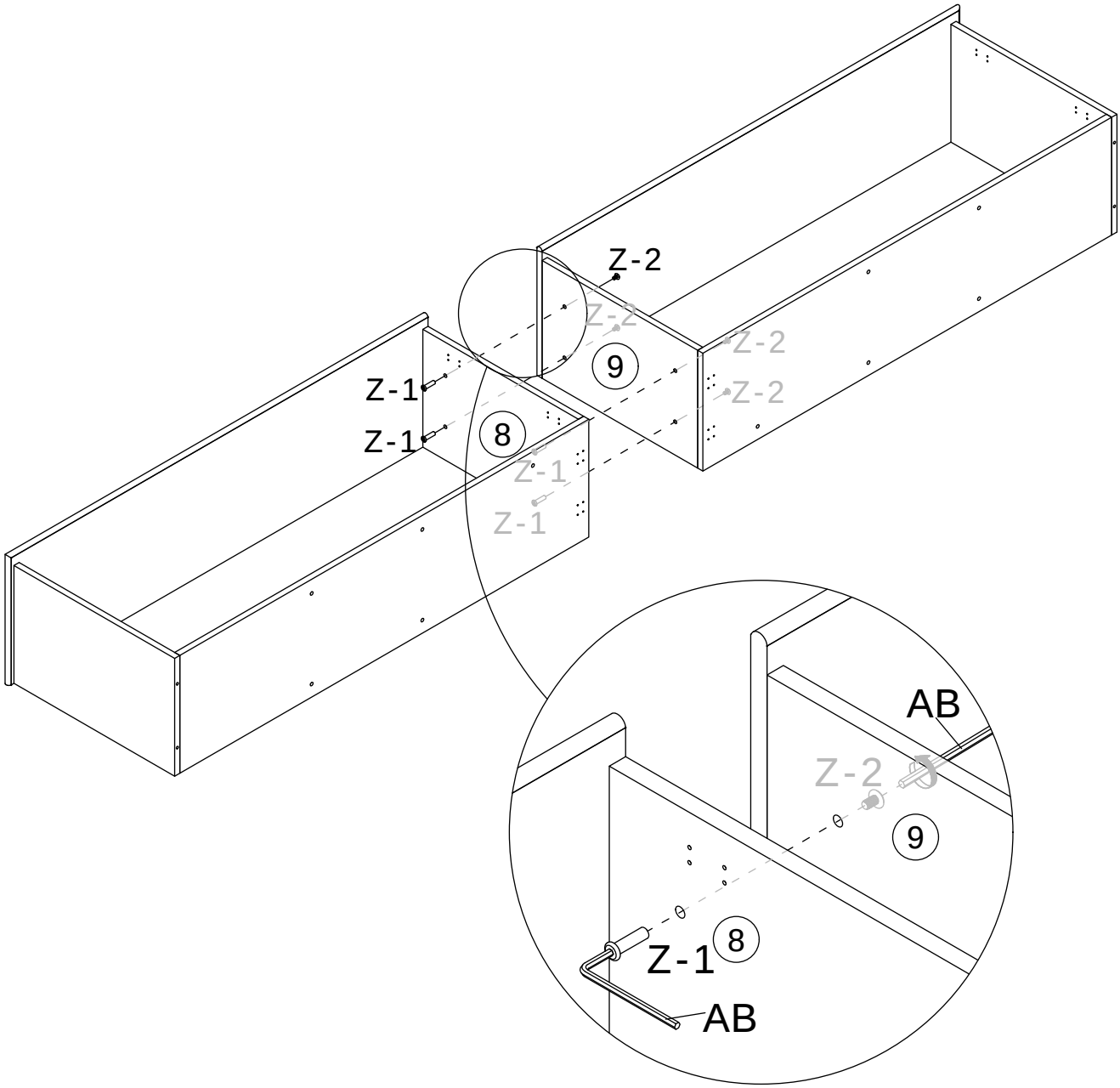

25

F x 16	X x 2	
CRD3514A		

	E	F	Y
	CRD3512A	CRD3514A	CRD3514A

Secure iron sheet (X) to panels 16 and 17 using screws (F).

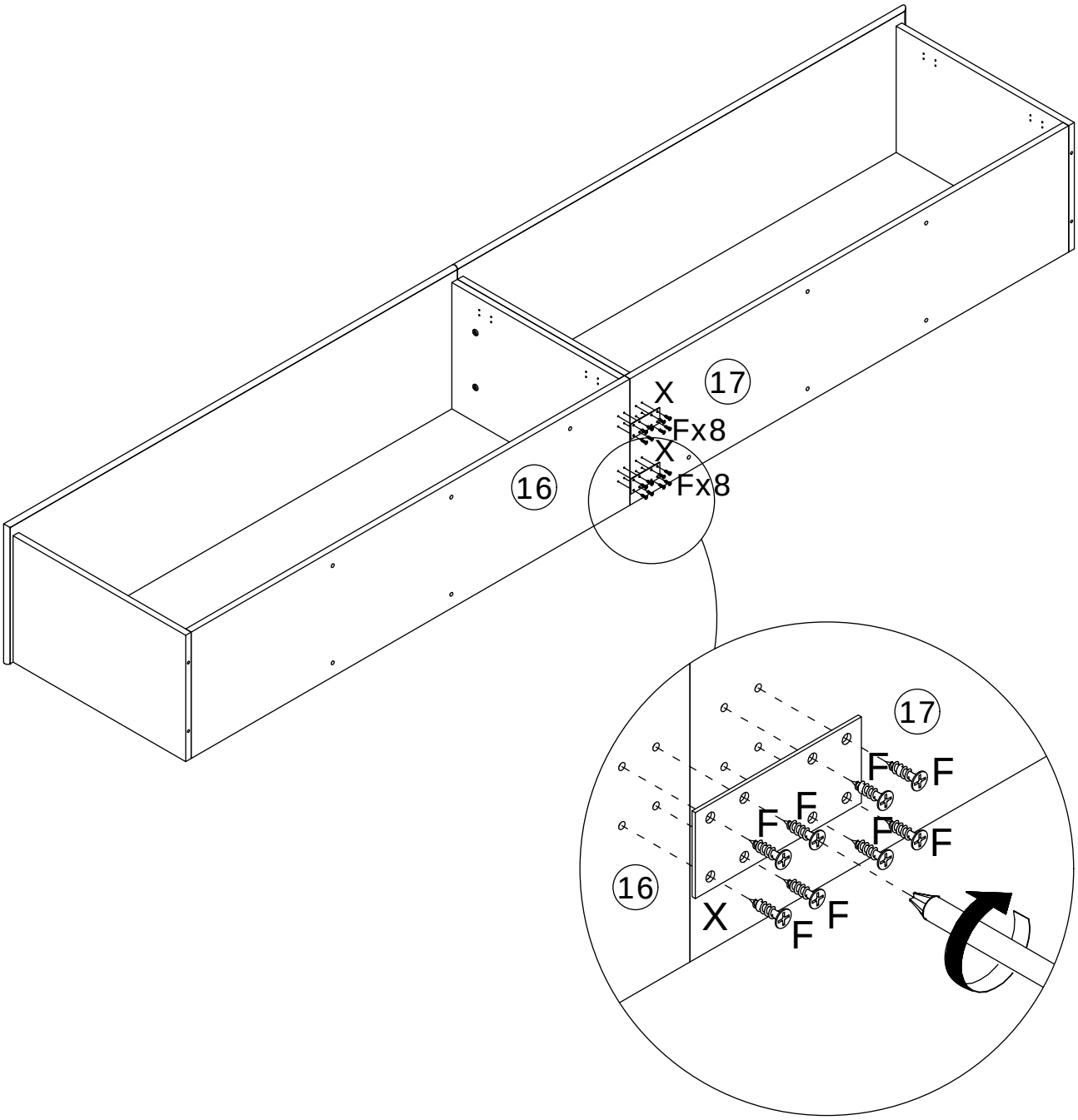

26

D x 4	P x 10	AB x 1	
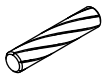 CRF0630A	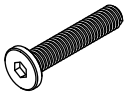 CRG0650A		

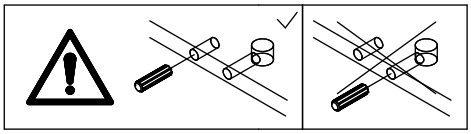

Connect panels 6 and 7 to panel 4 and 5 using dowels (D).
Secure parts (45) and (46) to panels 16 and 17 using screws (P).

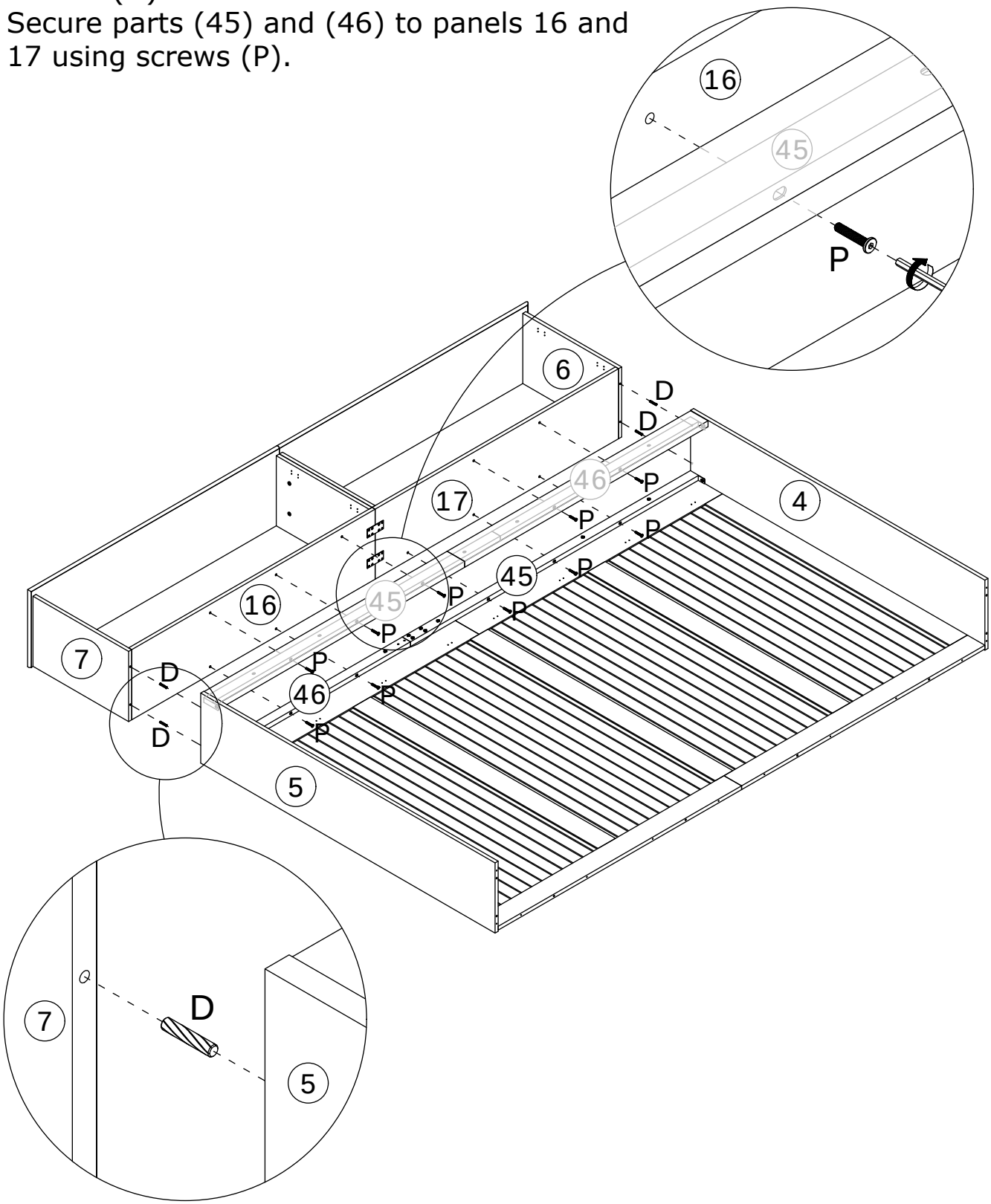

27

B x 12	C x 12	
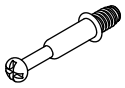 CRA0635B		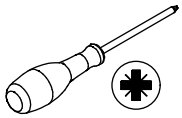

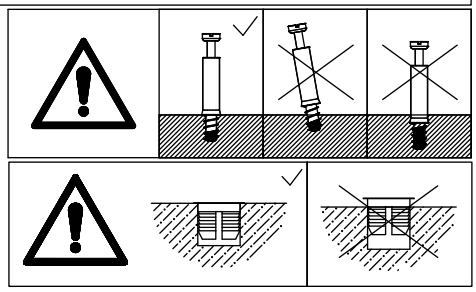

First install plugs (C) onto panels 1 and 2, then screw the self-tapping rods (B) into.

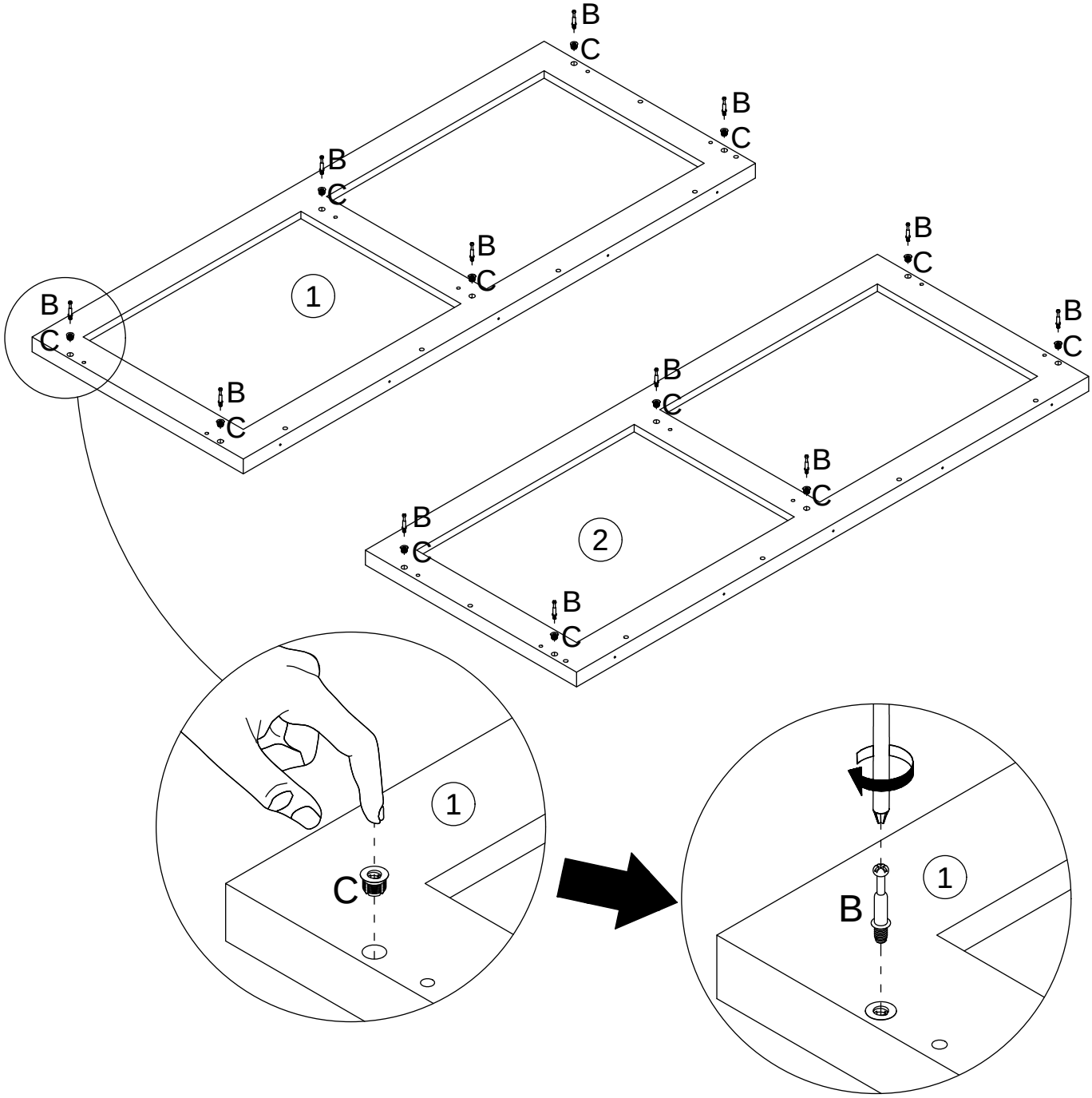

28

D x 8	J x 12	
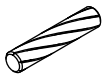 CRF0630A	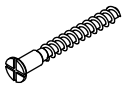 CRC0540A	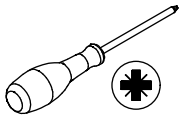

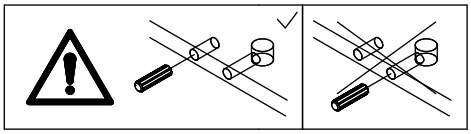

Connect panels 1 and 2 to panels 4, 5, 33, and 34 using dowels (D), and secure with screws (J).

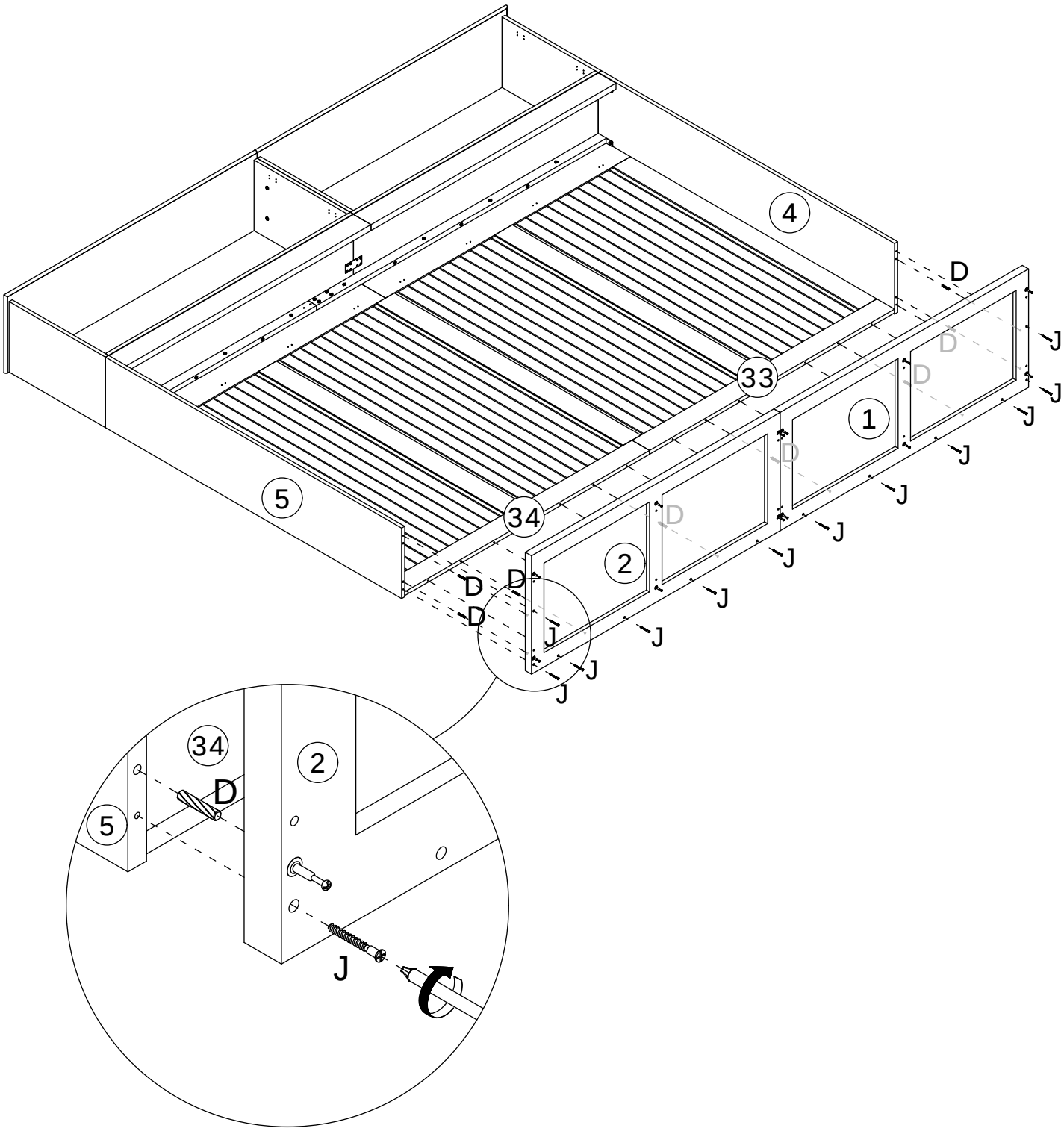

29

B x 8	C x 8	E x 4	W x 1	
CRA0635B		CRD3512A	WX1014A	

First install plugs (C) onto panels 10 and 13, then screw the self-tapping rods (B) into.
Mount slide rail (W-CL) and (W-CR) to panels 13 and 10 using screws (E).

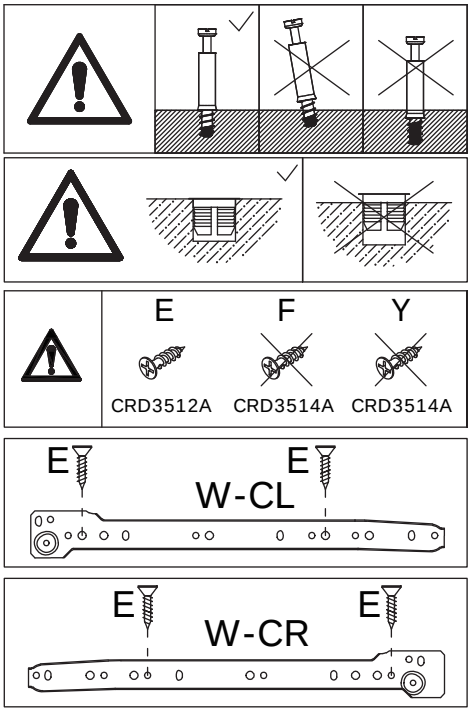

- **Please note that the screw hole positions of the two slides are different.**

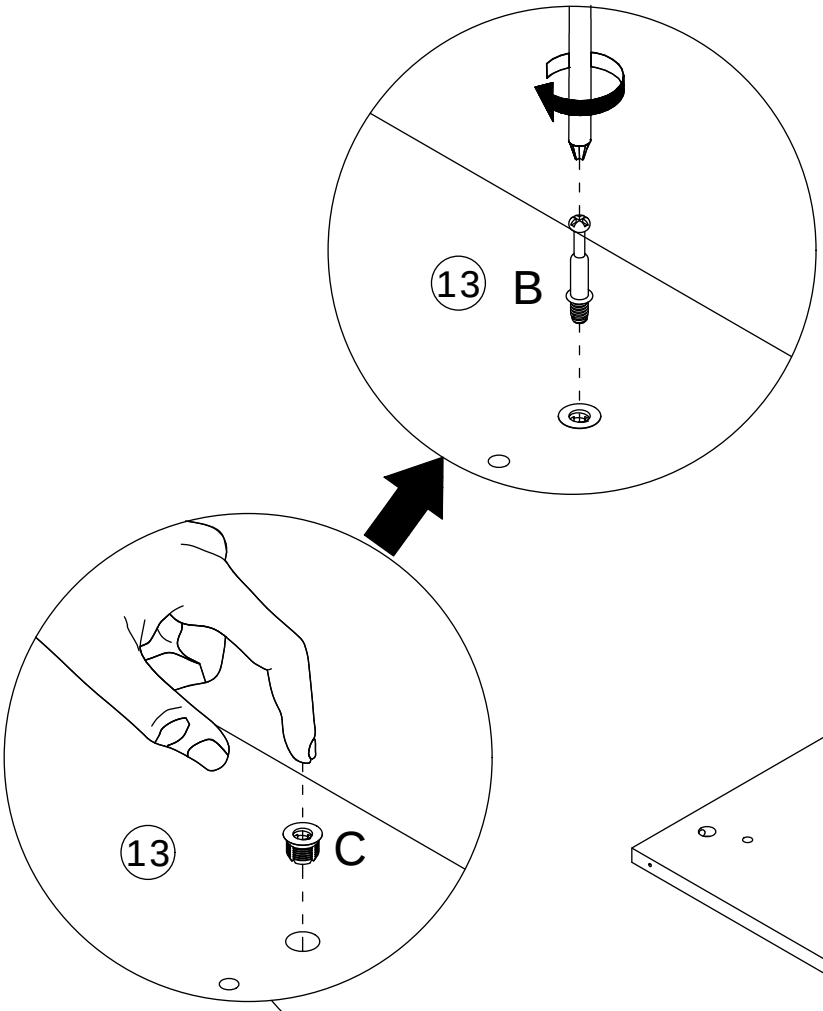

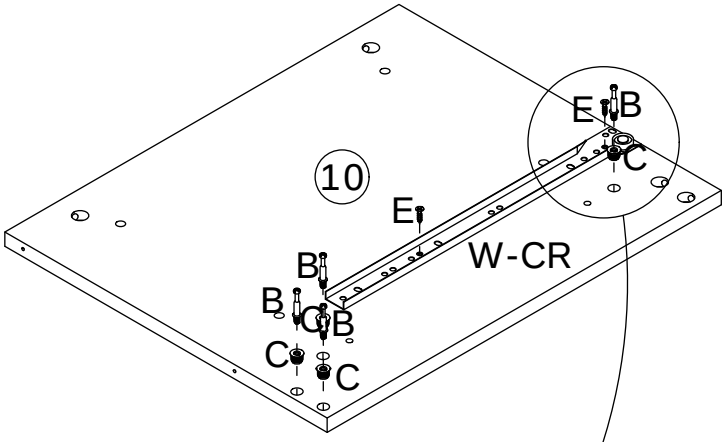

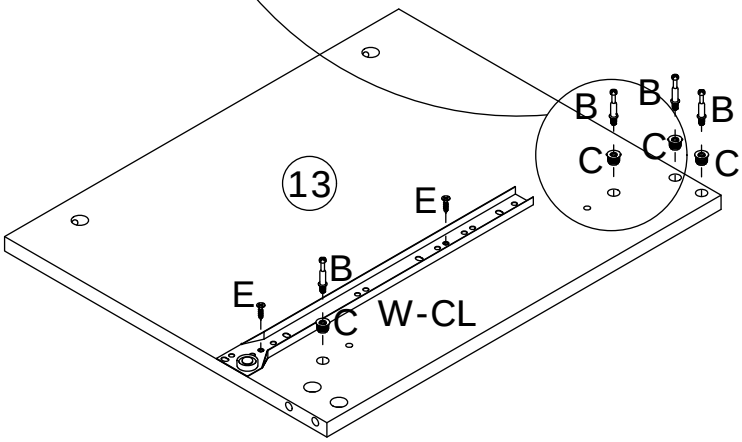

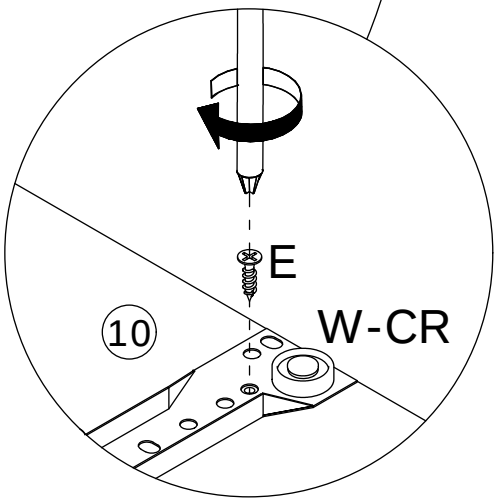

Please note that the screw holes on the slide rails on both sides of the board are not the same.

30

B x 8	C x 8	E x 4	W x 1	
CRA0635B		CRD3512A	WX1014A	

First install plugs (C) onto panels 11 and 12, then screw the self-tapping rods (B) into.
Mount slide rail (W-CL) and (W-CR) to panels 11 and 12 using screws (E).

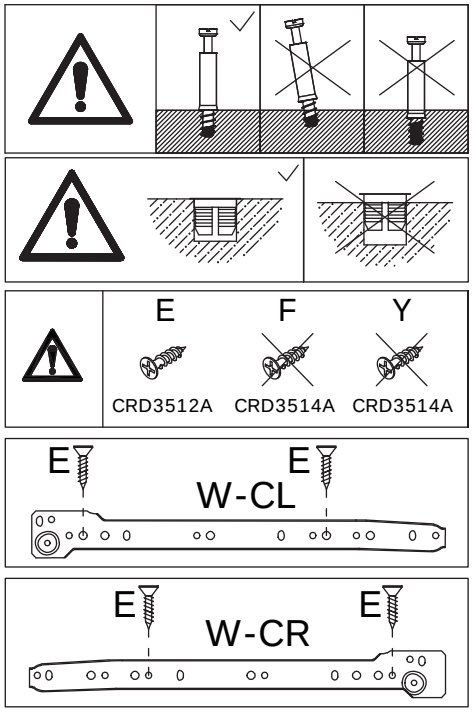

- **Please note that the screw hole positions of the two slides are different.**

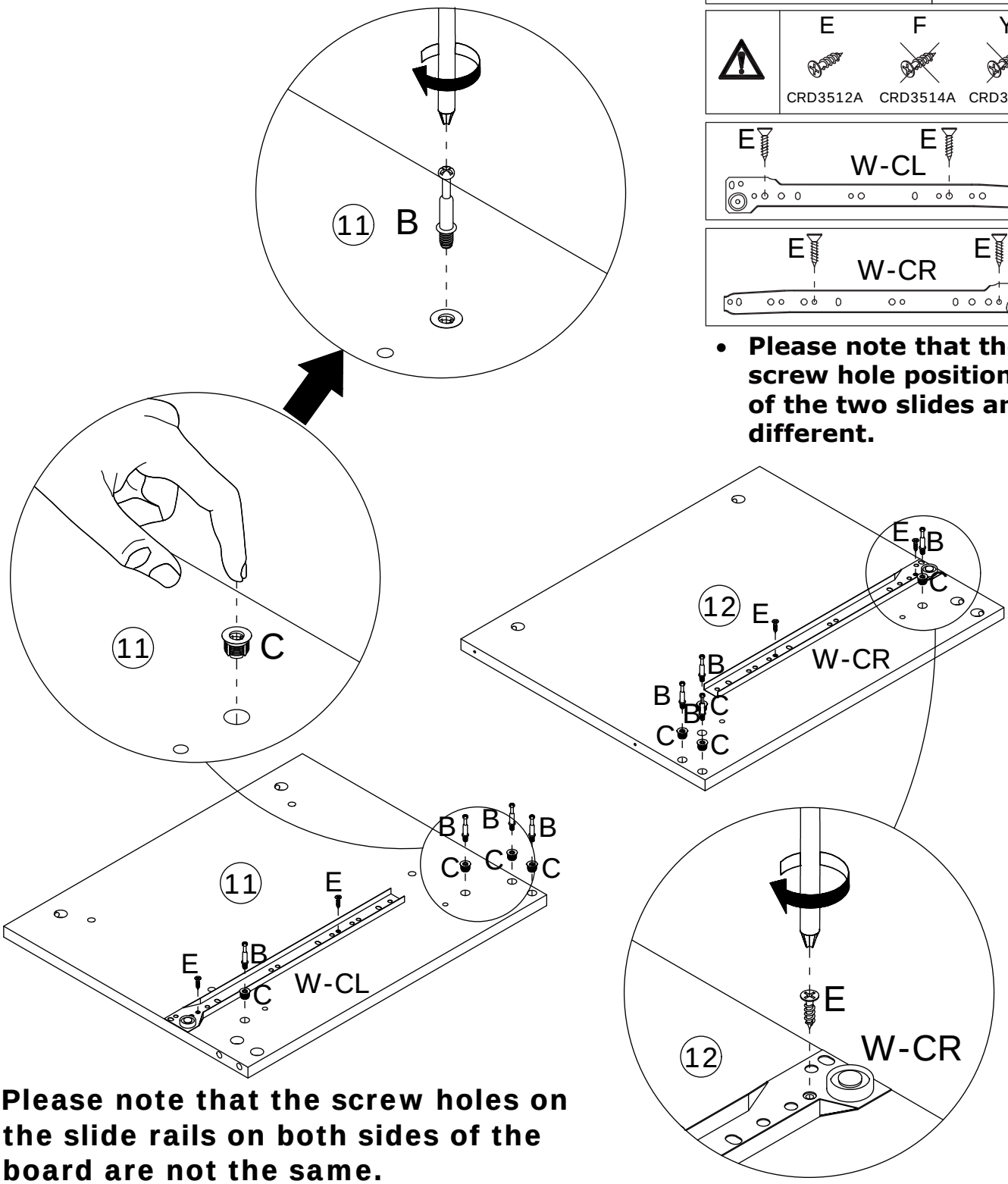

Please note that the screw holes on the slide rails on both sides of the board are not the same.

31

E x 8	W x 2	
CRD3512A	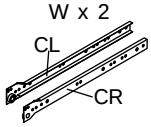 WX1014A	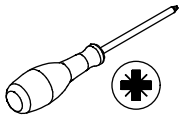

	E	F	Y
	CRD3512A	CRD3514A	CRD3514A

Mount slide rail (W-CL) and (W-CR) to panel 44 using screws (E).

- **Please note that the screw hole positions of the two slides are different.**

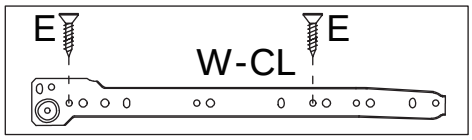

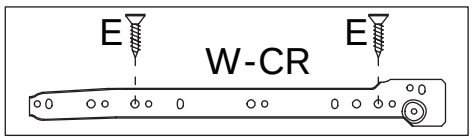

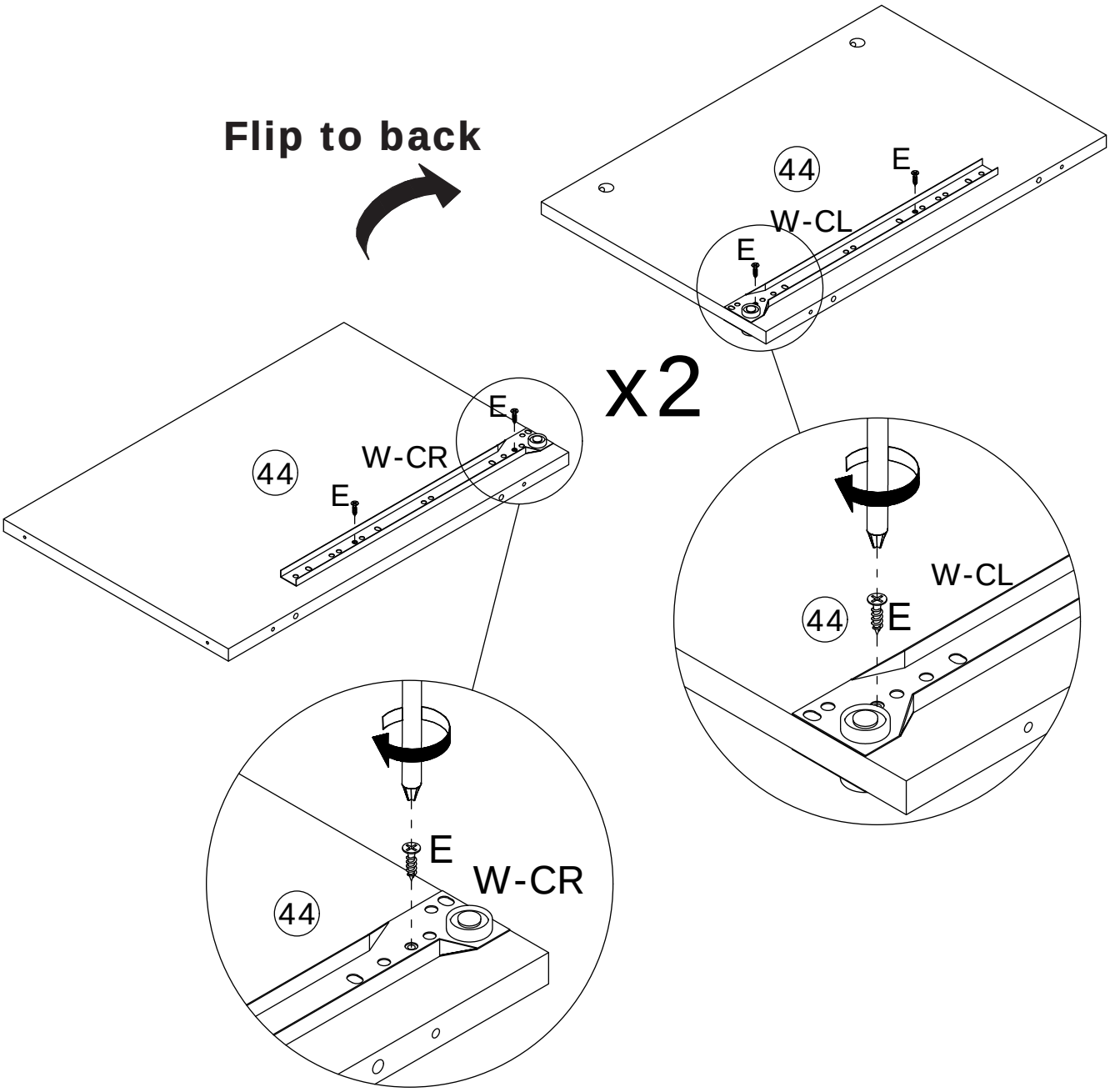

32

B x 34	C x 34	
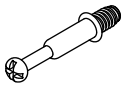 CRA0635B		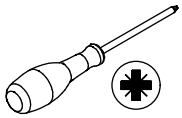

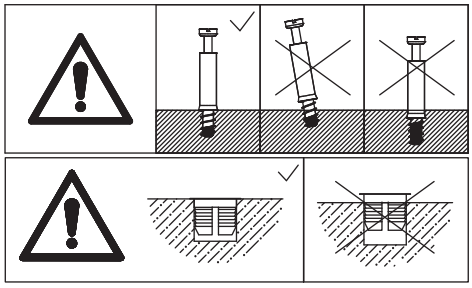

First install plugs (C) onto panels 18, 37, and 38, then screw the self-tapping rods (B) into.

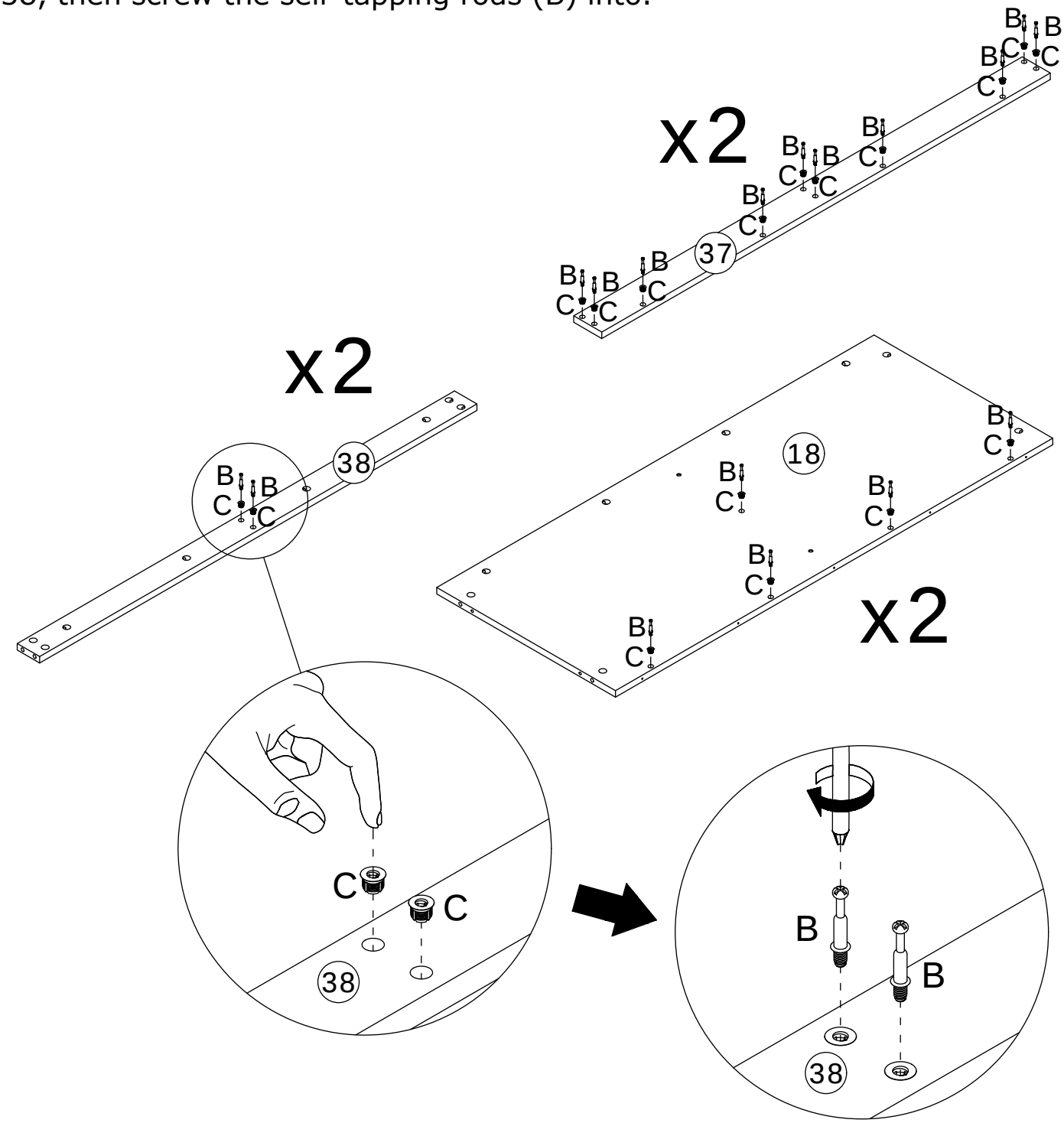

33

D x 4	J x 4	
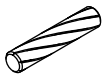 CRF0630A	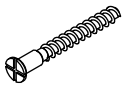 CRC0540A	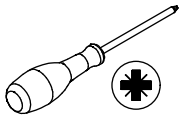

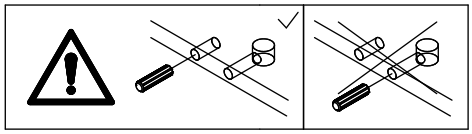

Attach panel 44 to panel 18 using dowels (D) and secure with screws (J).

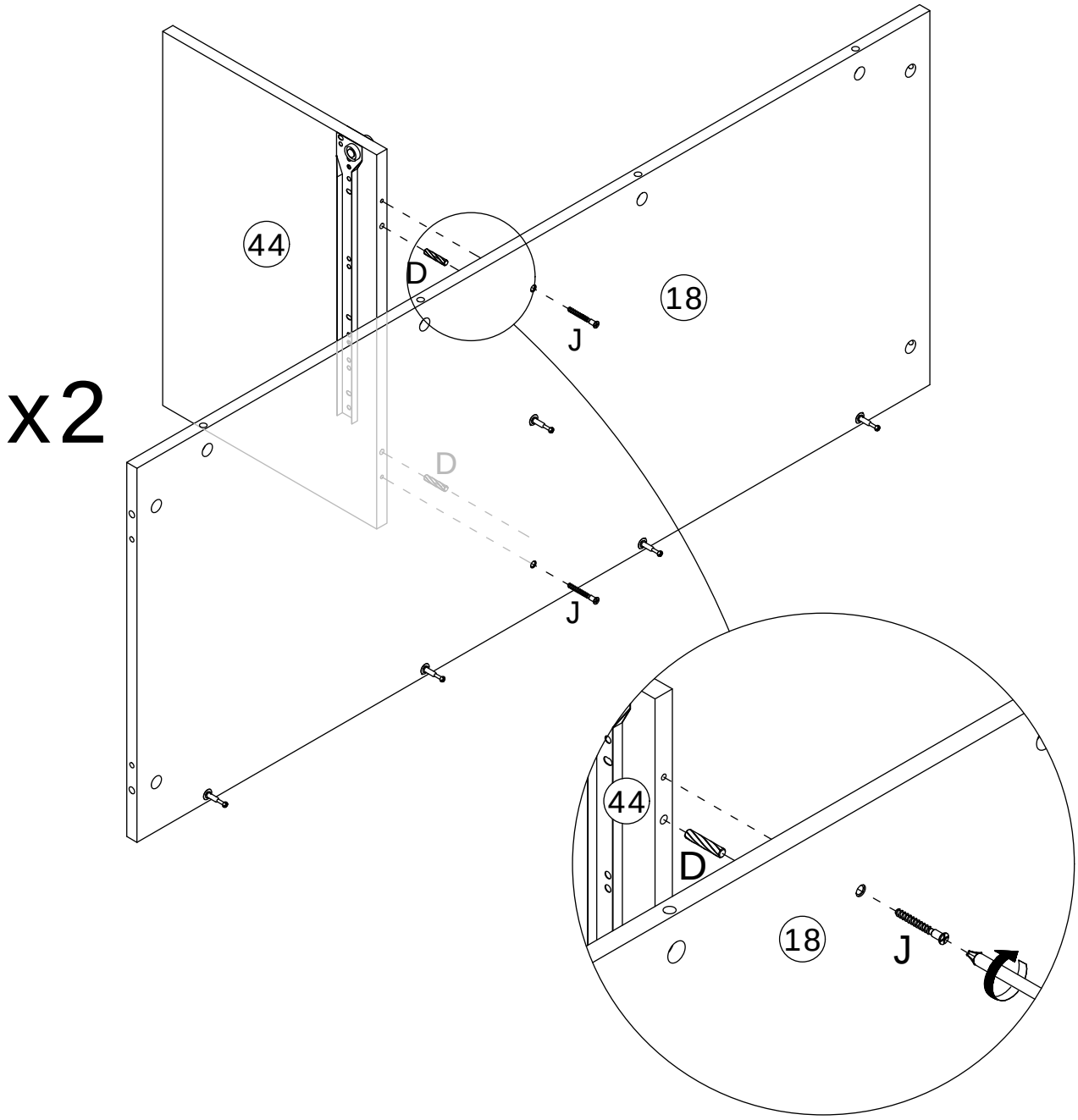

34

A x 4

CRB1595A

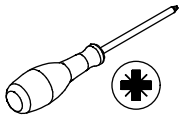

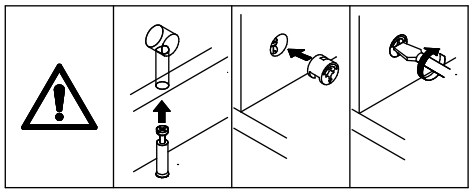

Connect panel 39 to panel 38, then tighten by turning cam locks (A) clockwise.

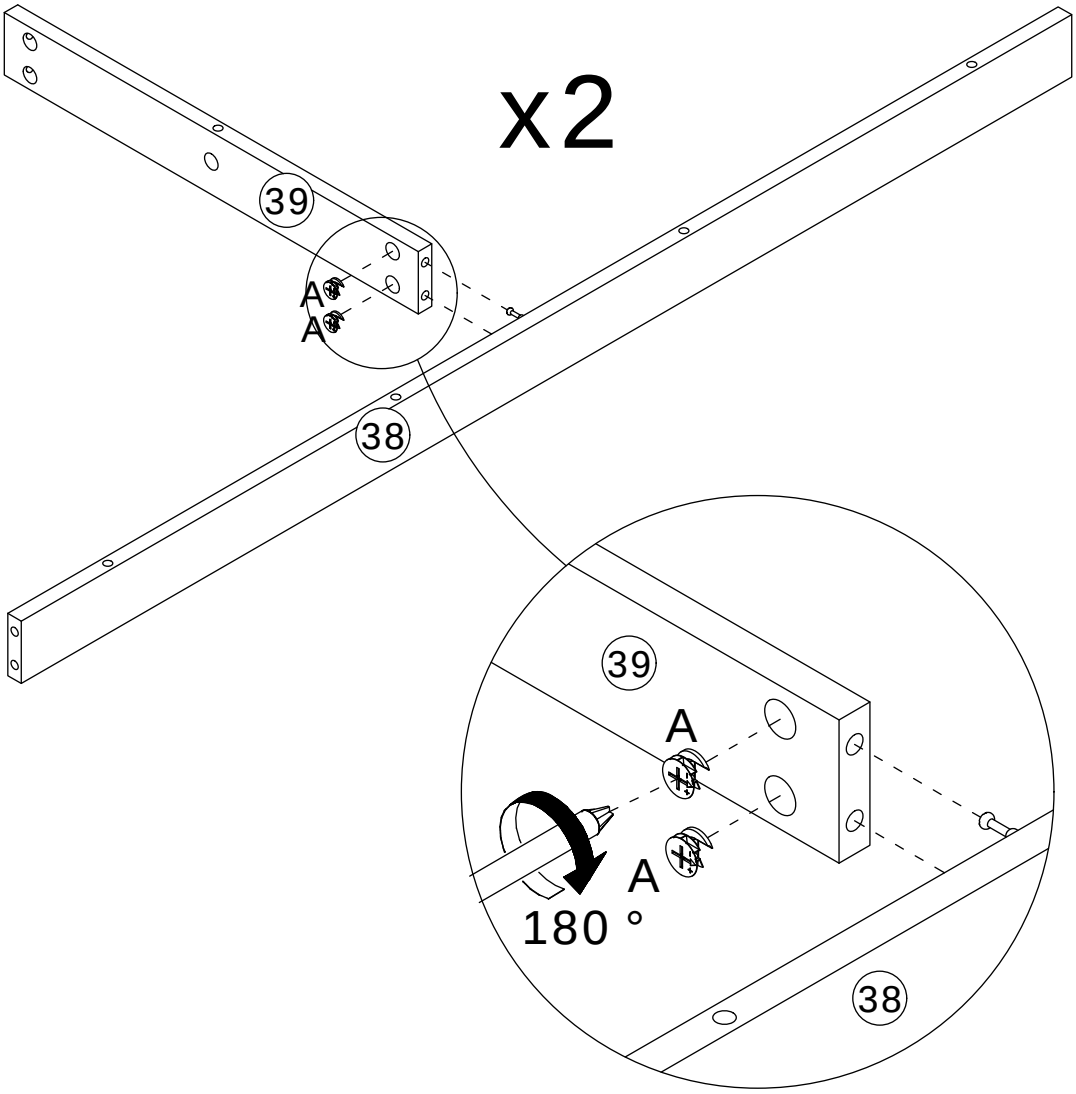

35

A x 10

CRB1595A

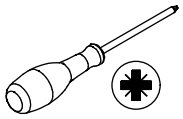

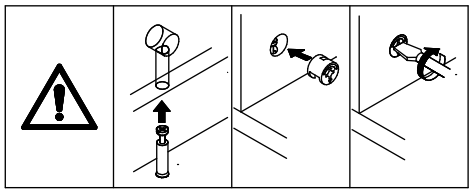

Connect panels 38 and 39 to panel 18, then tighten by turning cam locks (A) clockwise.

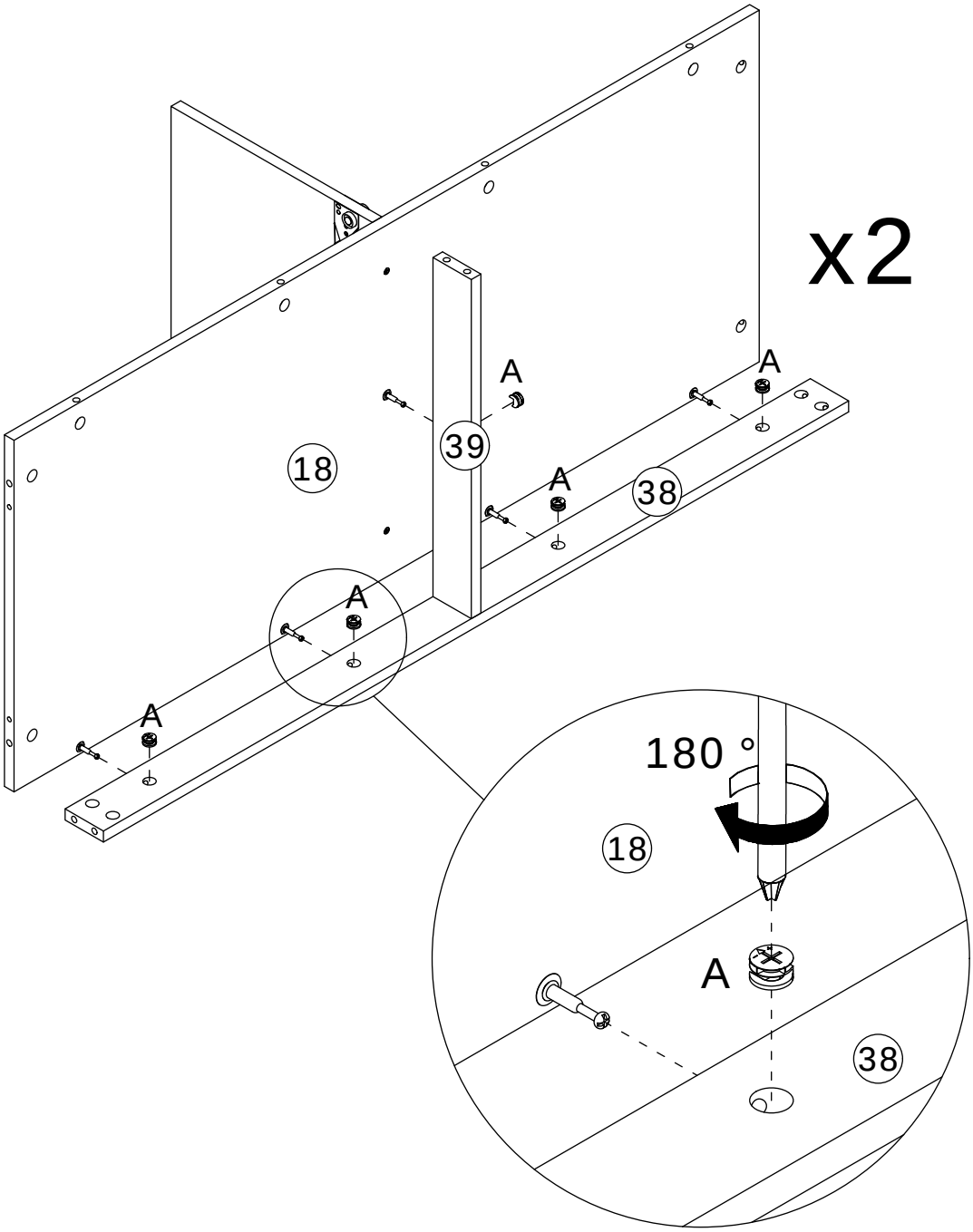

36

A x 8	D x 4	
	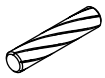	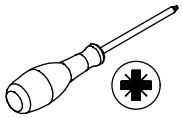
CRB1595A	CRF0630A	

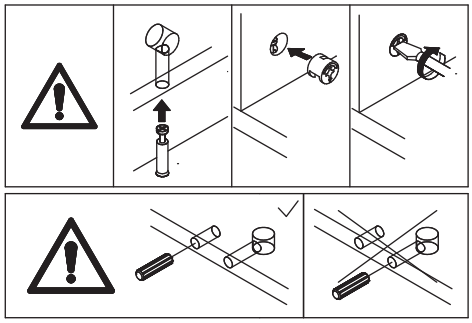

Connect panels 10 and 13 to panels 18 and 38 using dowels (D), then tighten by turning cam locks (A) clockwise.

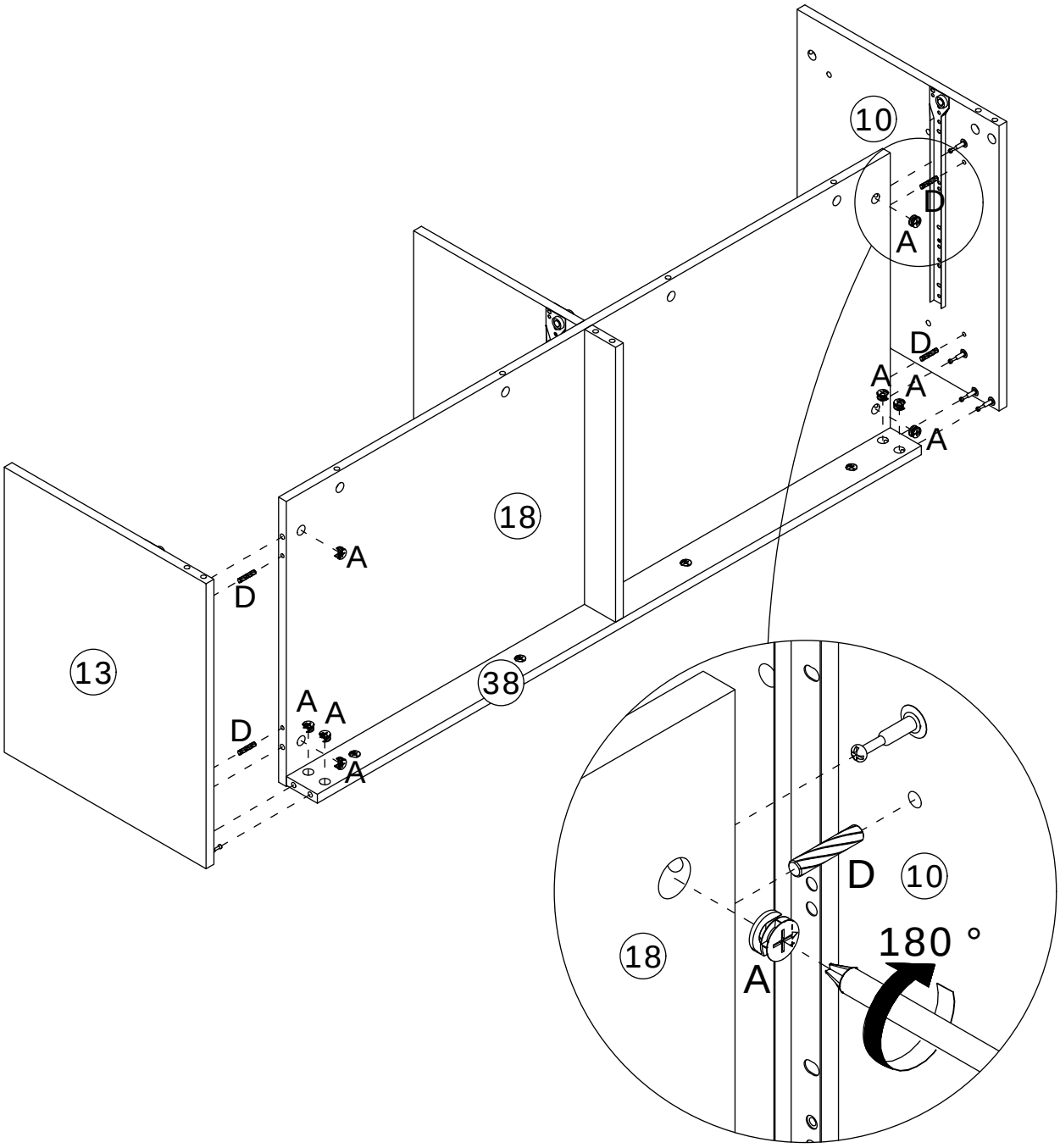

37

A x 8	D x 4	
CRB1595A	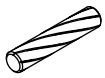 CRF0630A	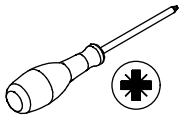

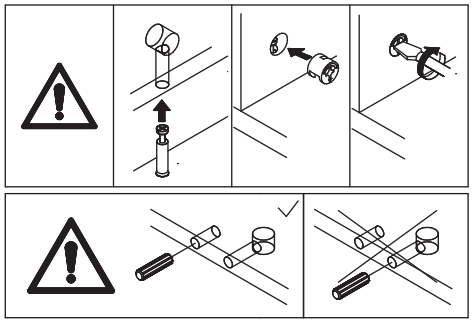

Connect panels 11 and 12 to panels 18 and 38 using dowels (D), then tighten by turning cam locks (A) clockwise.

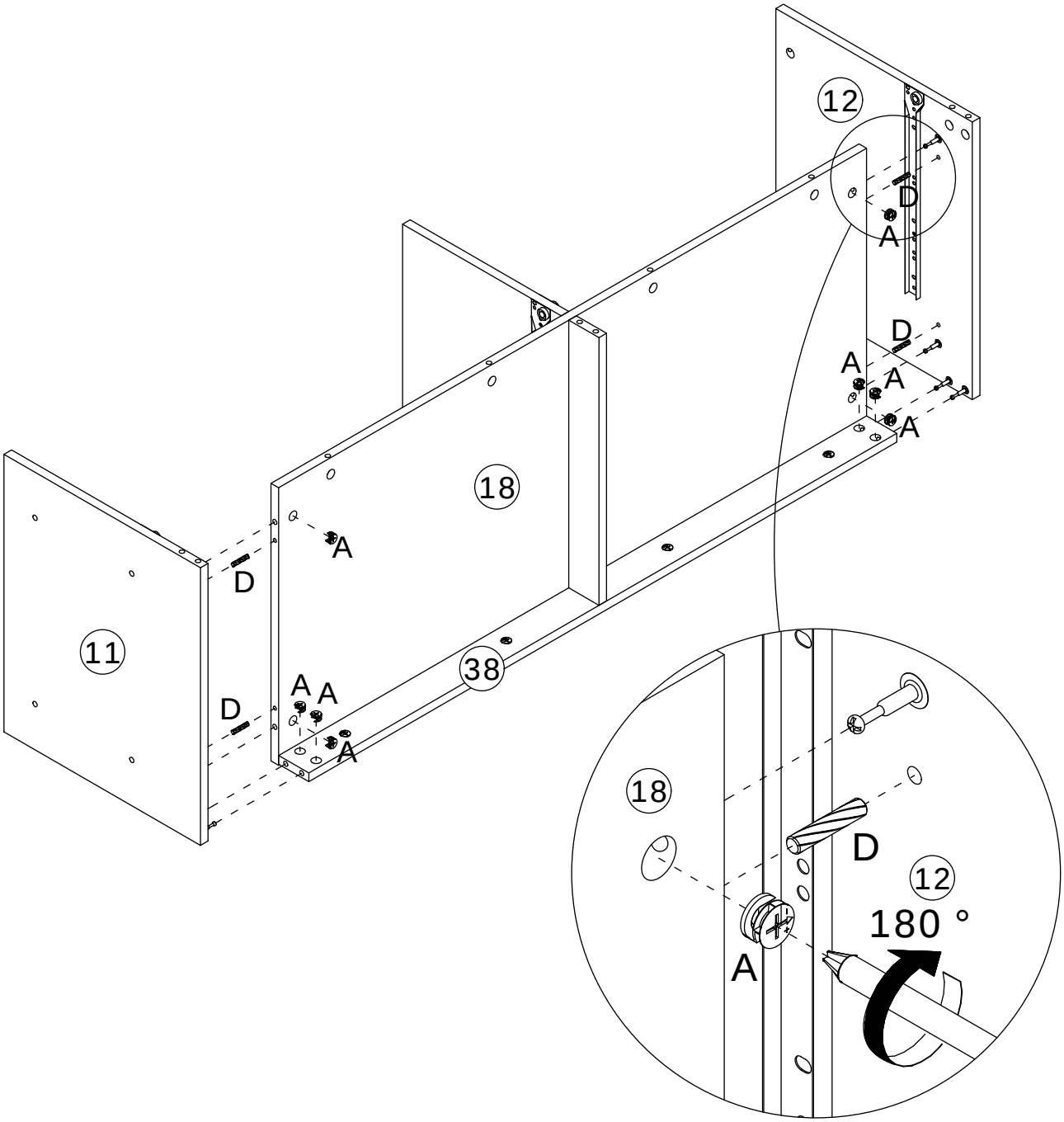

38

A x 10

CRB1595A

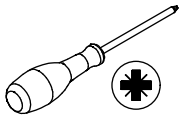

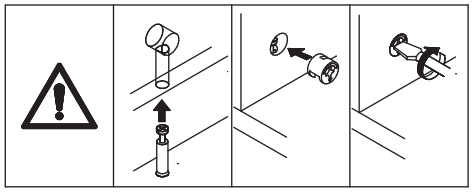

Connect panel 37 to the mounting unit, then tighten by turning cam locks (A) clockwise.

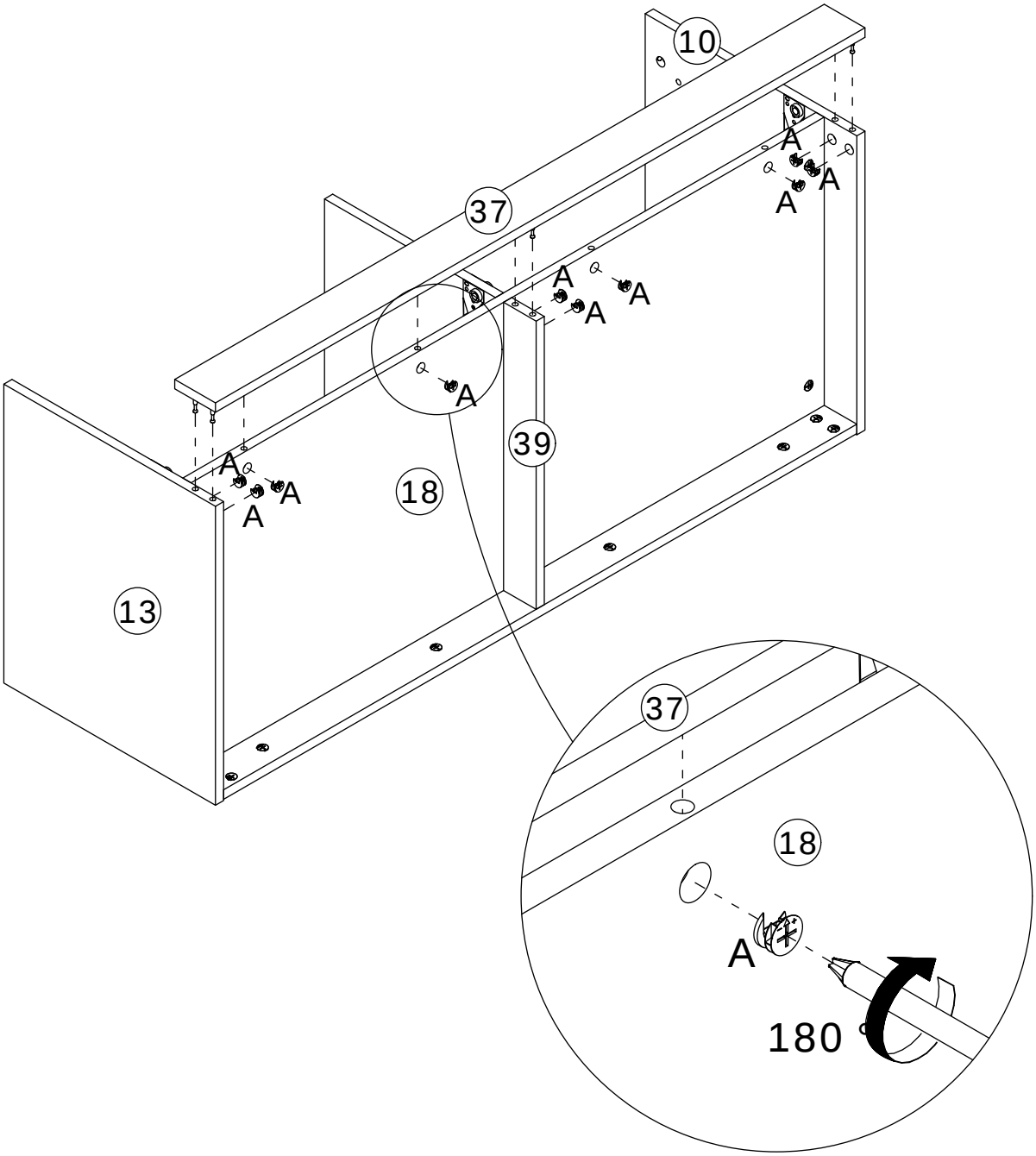

39

A x 10

CRB1595A

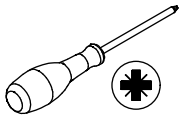

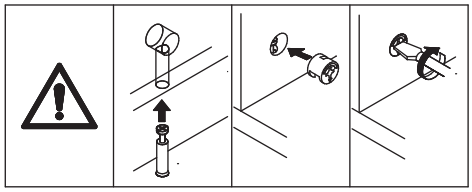

Connect panel 37 to the mounting unit, then tighten by turning cam locks (A) clockwise.

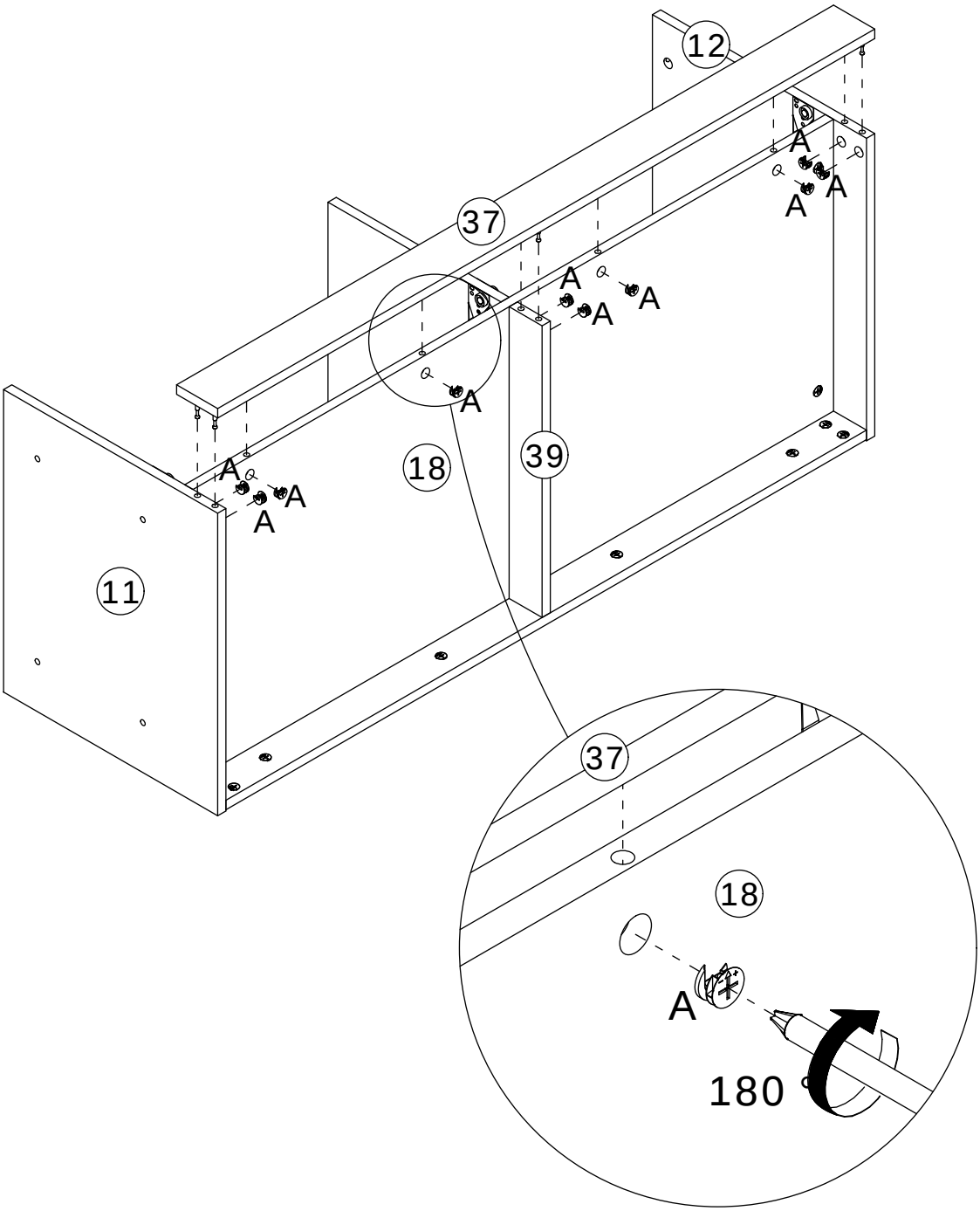

40

Z x 4	AB x 2	
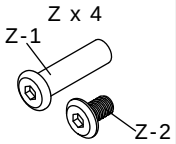		

Secure panels 10 and 11 using screws (Z).

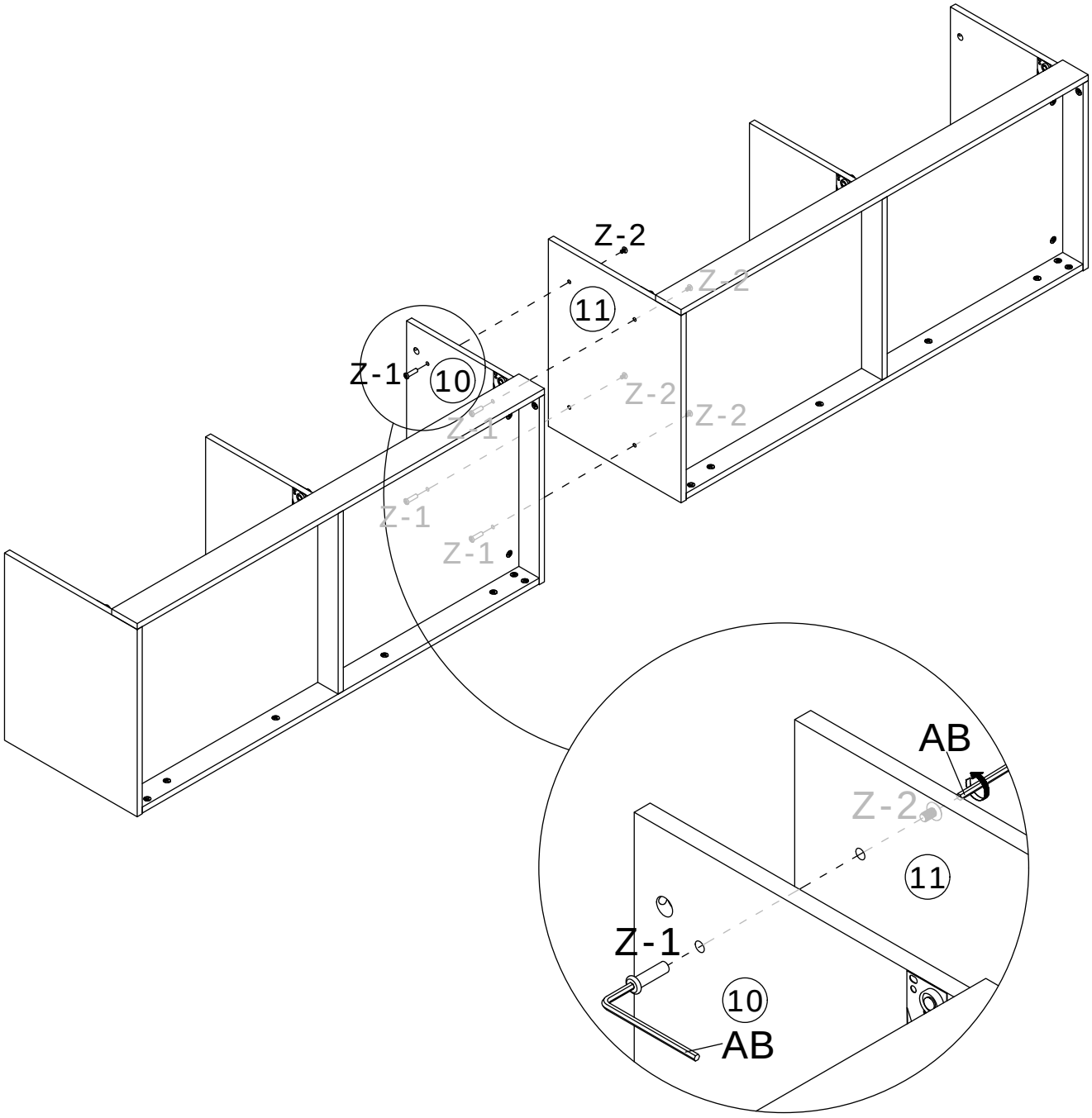

41

A x 12	D x 12	
CRB1595A	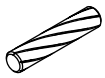 CRF0630A	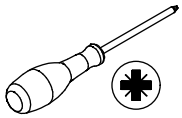

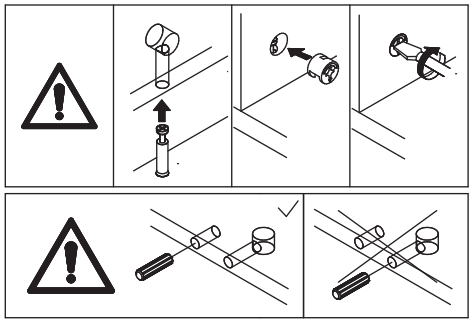

Connect the two components using dowels (D), then tighten by turning cam locks (A) clockwise.

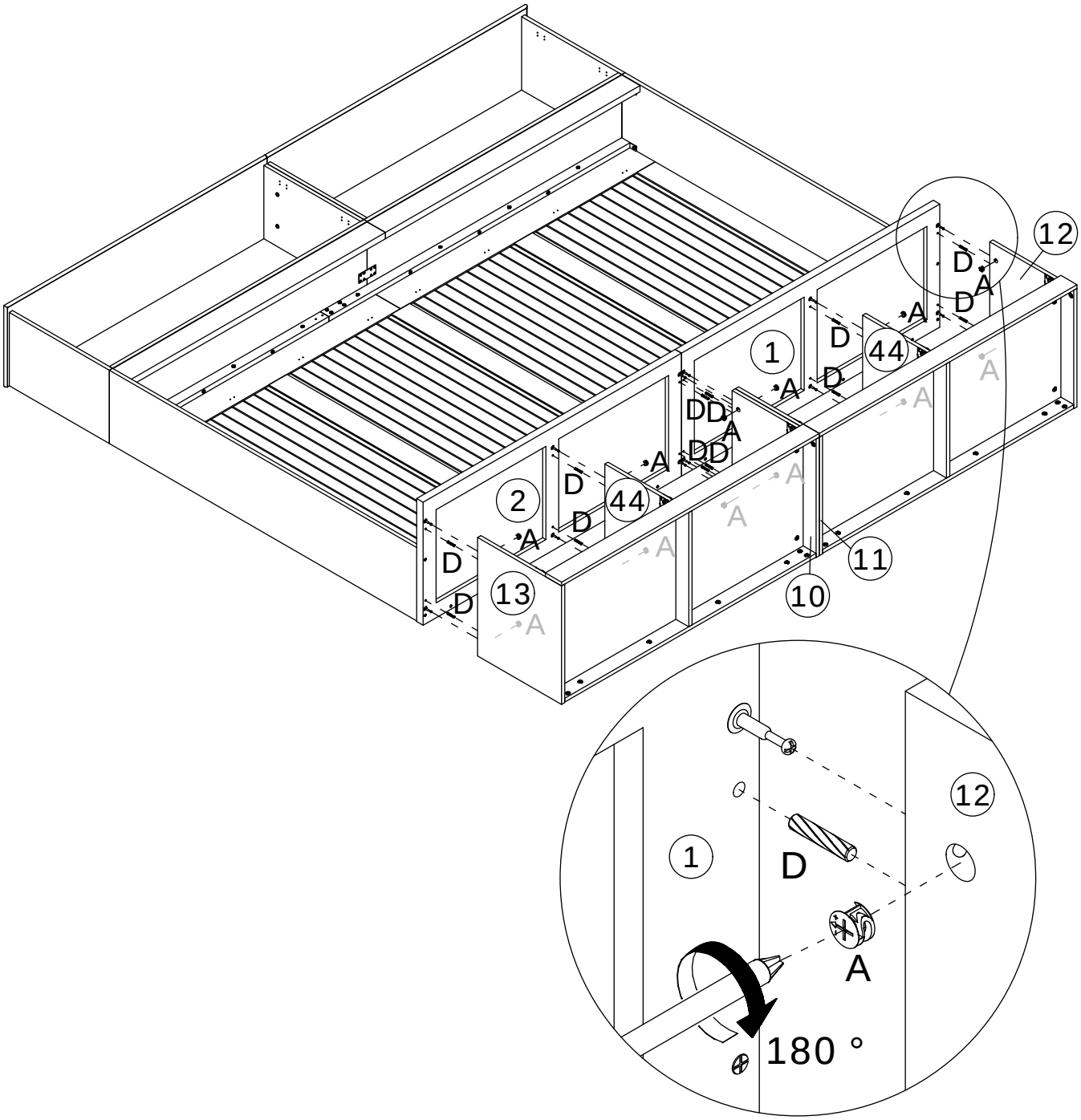

42

L x 60

CRE0316A

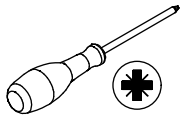

Secure back panels 35 and 36 to the mounting unit using screws (L).

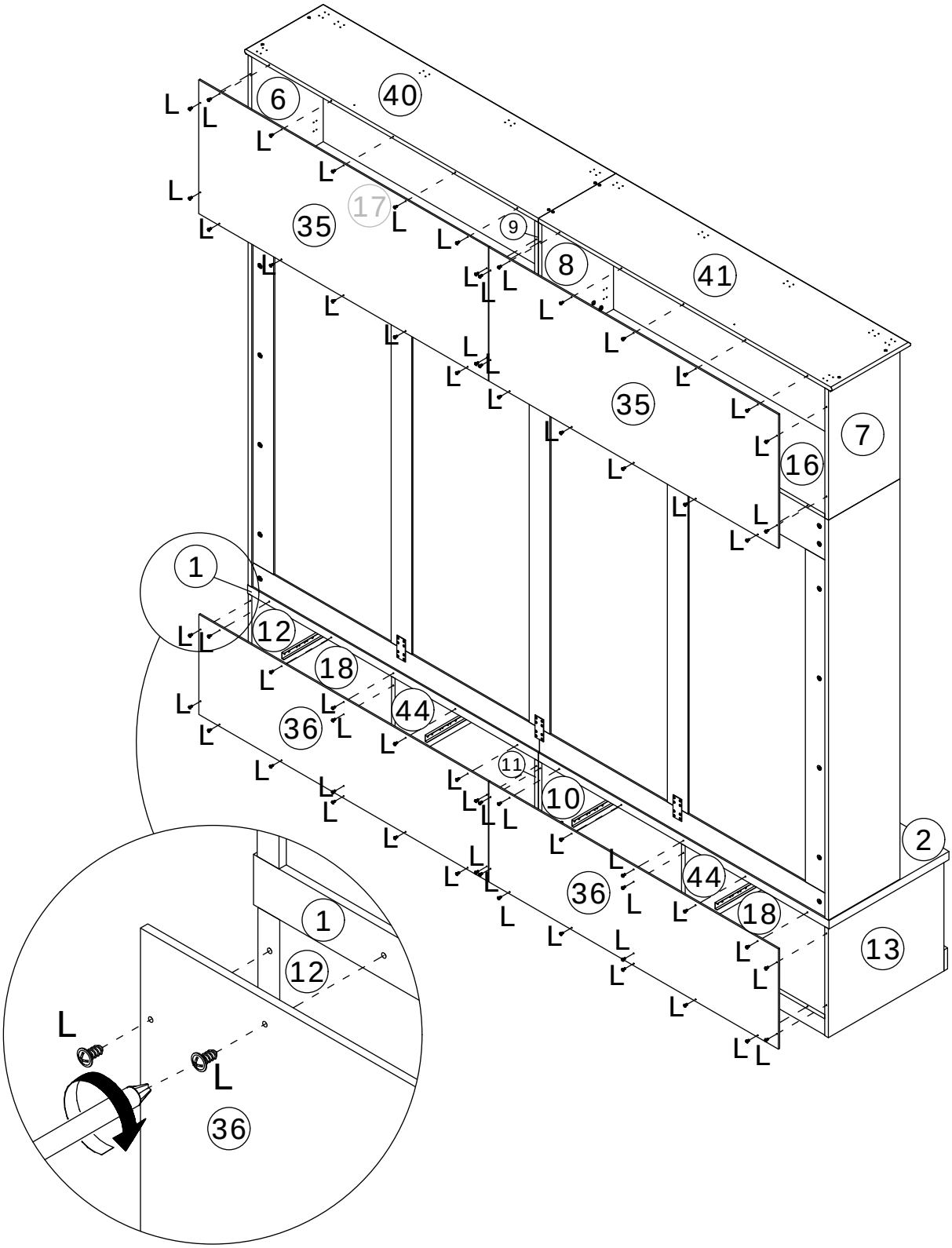

43

F x 2	U x 2	
CRD3514A		

	E	F	Y
	CRD3512A	CRD3514A	CRD3514A

Secure component (U) to panels 40 and 41 using screws (F).

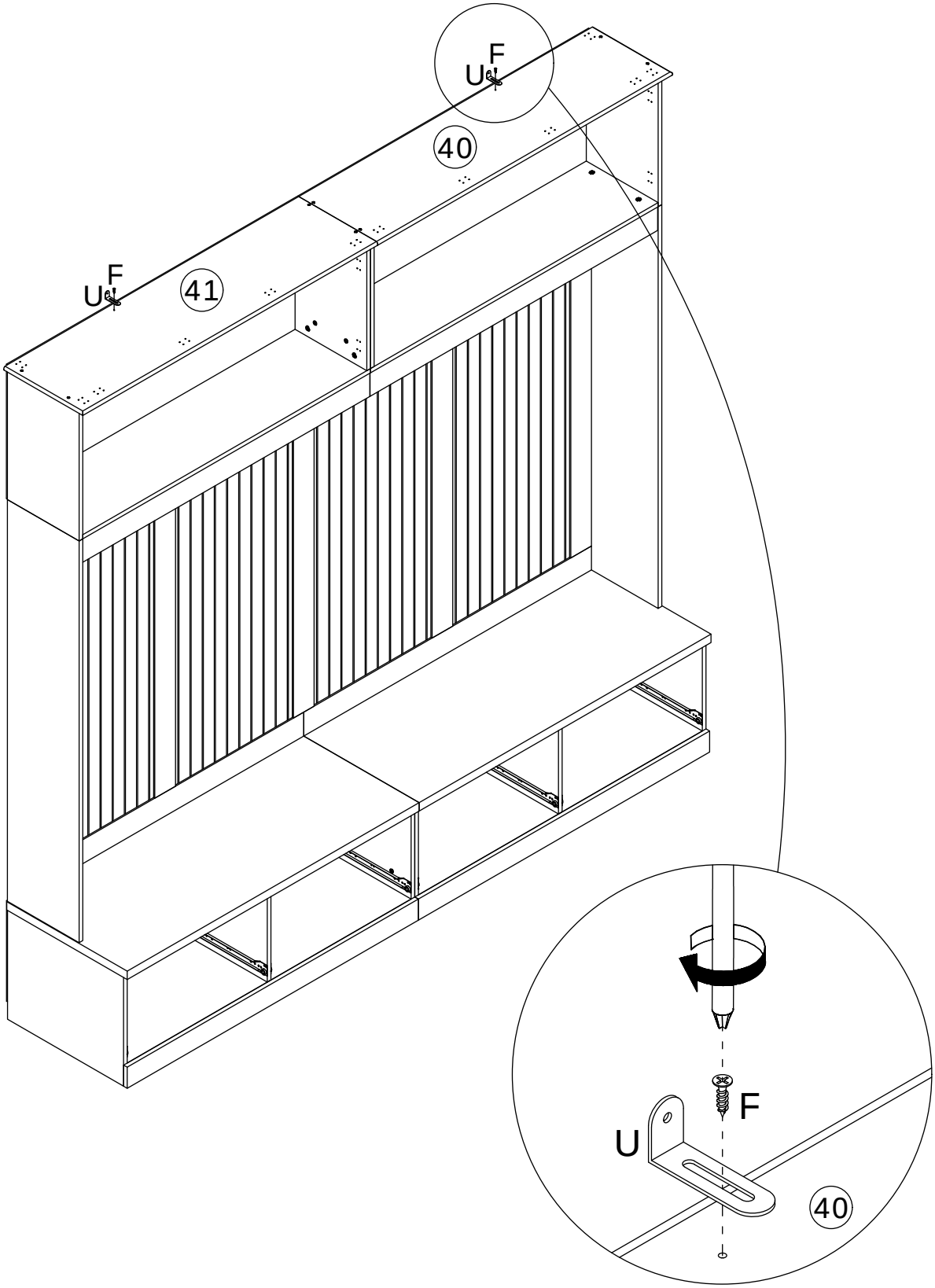

44

K x 2	M x 2	
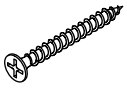 CRD3535A	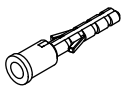	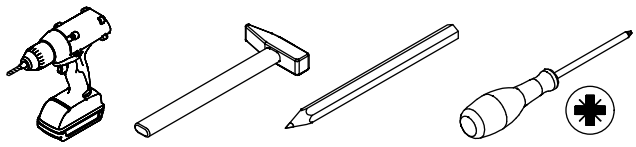

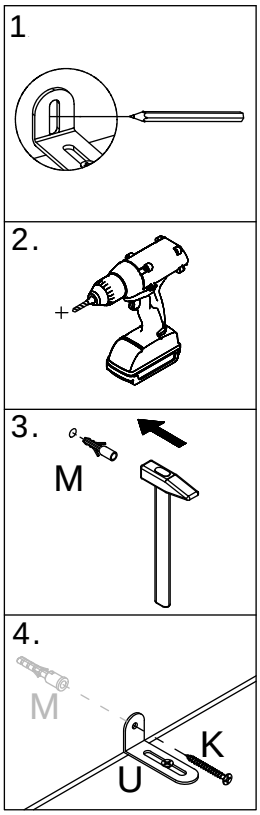

Install anti-tip devices.

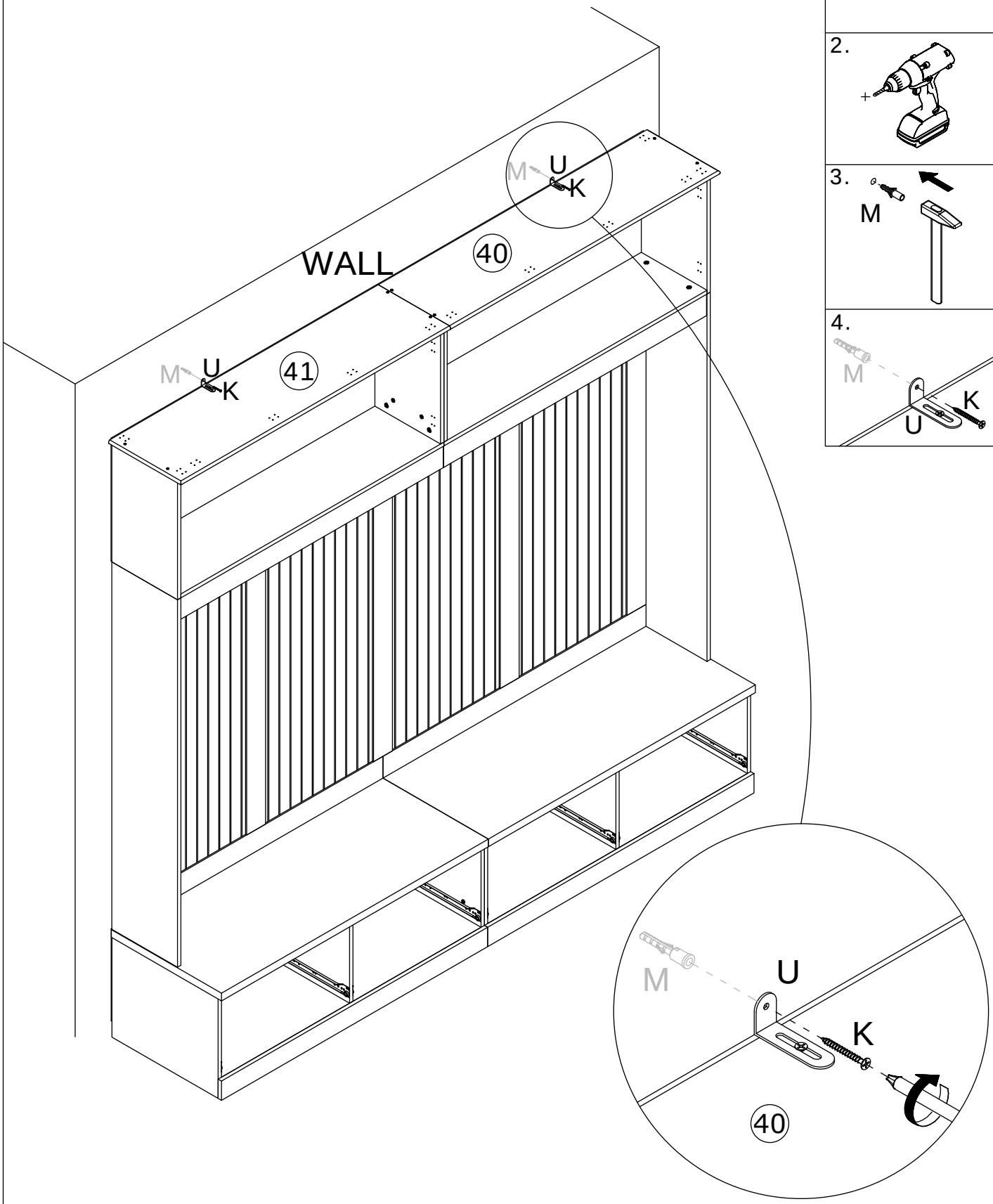

45

E x 32	T x 4	
CRD3512A		

	E	F	Y
	CRD3512A	CRD3514A	CRD3514A

Secure brackets (T) to panels 29, 41, 30, and 40 using screws (E).

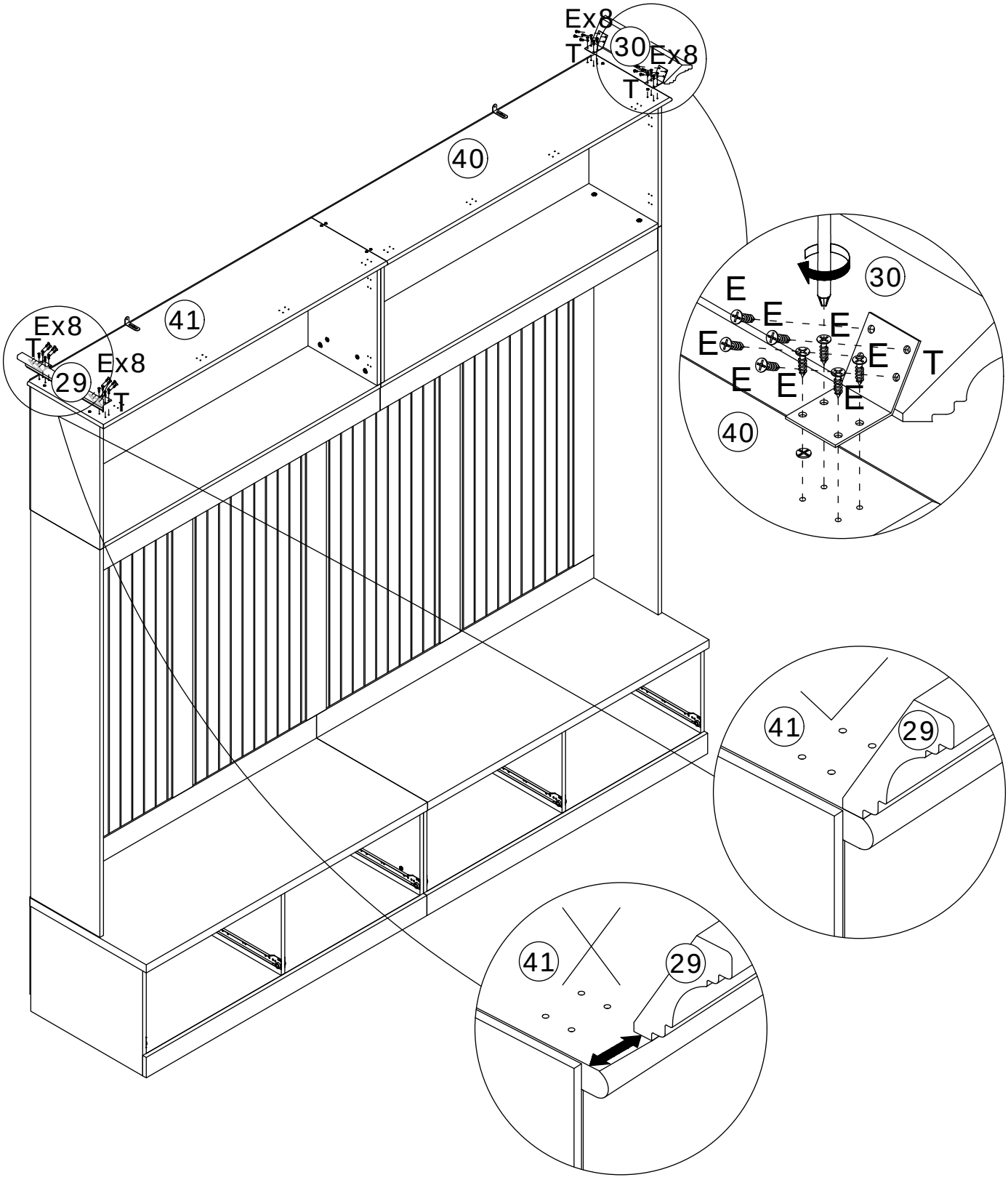

46

E x 64	T x 8	
CRD3512A		

	E	F	Y
	CRD3512A	CRD3514A	CRD3514A

Secure brackets (T) to panels 27, 40, 28, and 41 using screws (E).

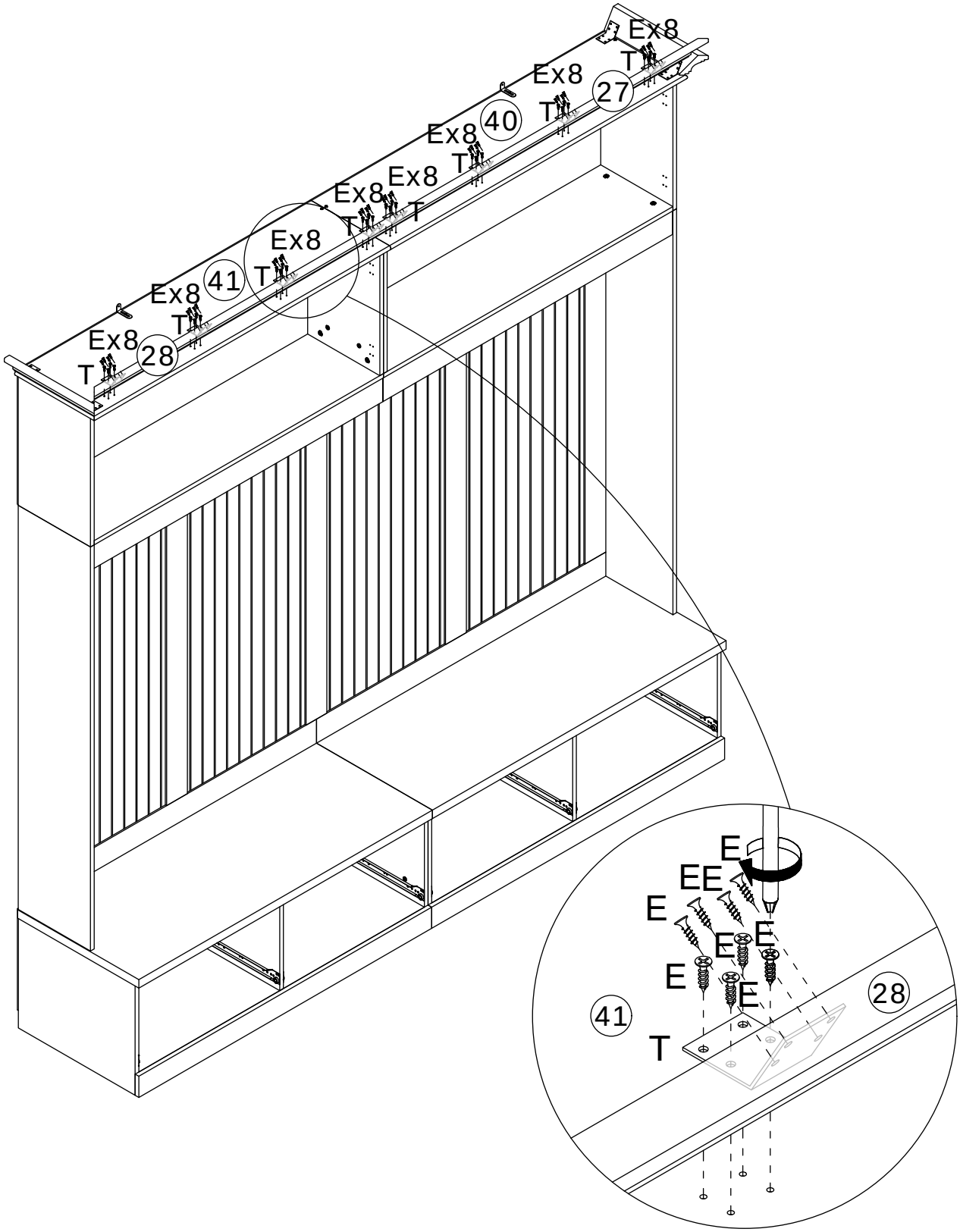

47

F x 10	V x 2	AA x 1	
CRD3514A			

	E	F	Y
	CRD3512A	CRD3514A	CRD3514A

Secure parts (V) and (AA)to panels 27, 28, 29, and 30 using screws (F).

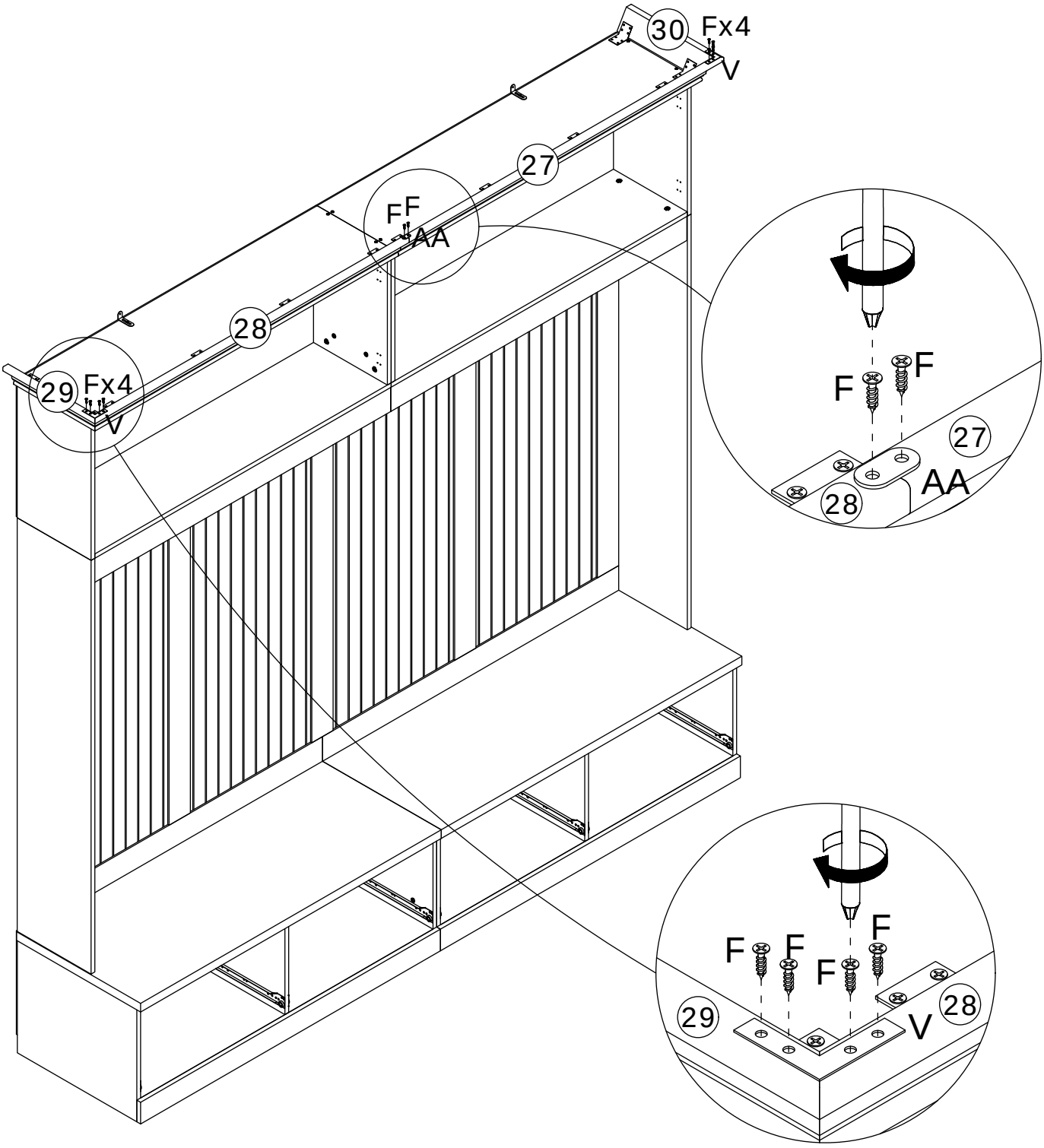

48

F x 16	G x 8	
CRD3514A	DGA861A	

	E	F	Y
	CRD3512A	CRD3514A	CRD3514A

Secure hinges (G) to panel 26 using screws (F).

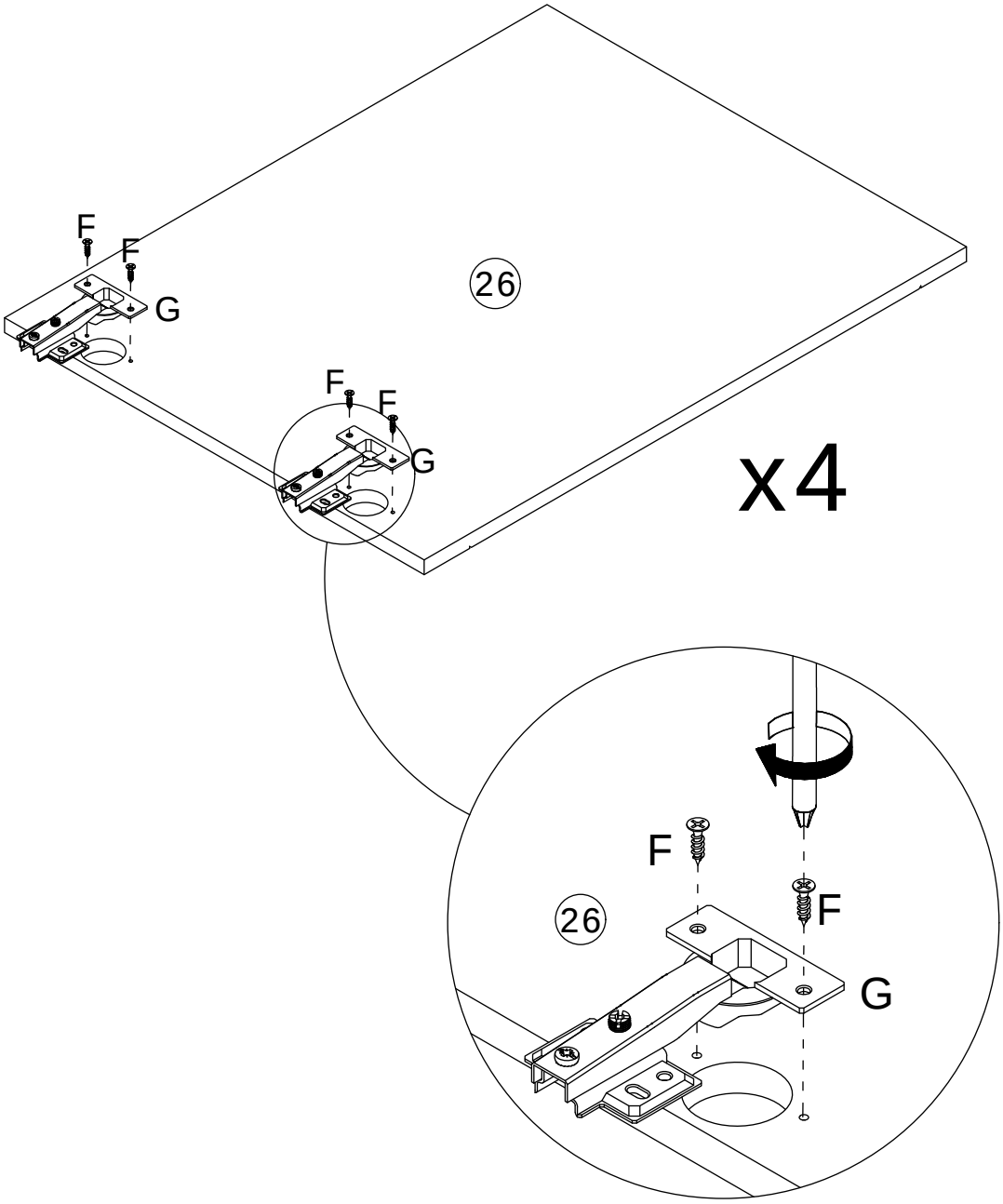

49

F x 16	
CRD3514A	

	E	F	Y
	CRD3512A	CRD3514A	CRD3514A

Connect door panels to panels 7 and 6 by securing hinges using screws (F).

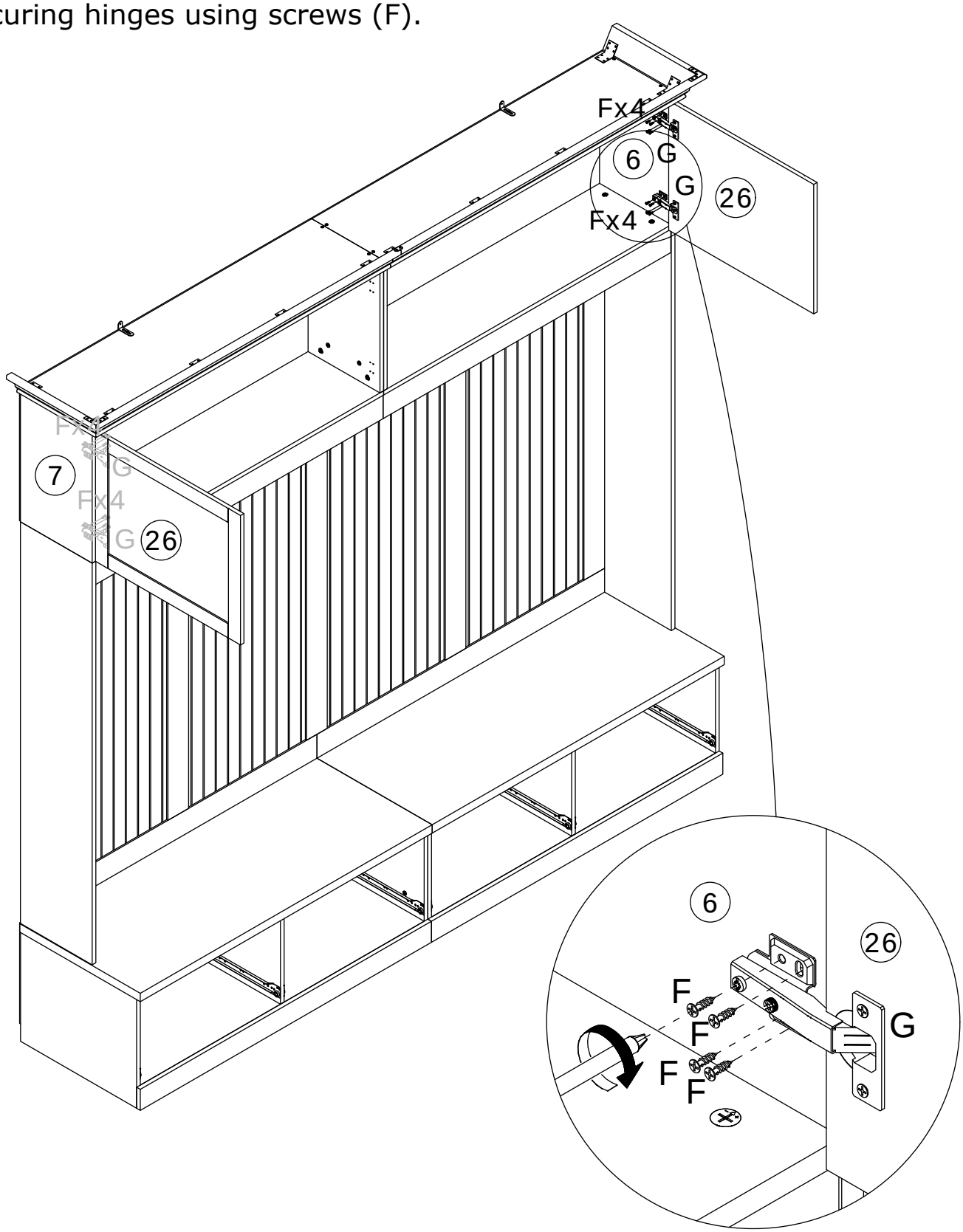

50

F x 16	
CRD3514A	

	E	F	Y
	CRD3512A	CRD3514A	CRD3514A

Connect door panels to panel 8 by securing hinges using screws (F).

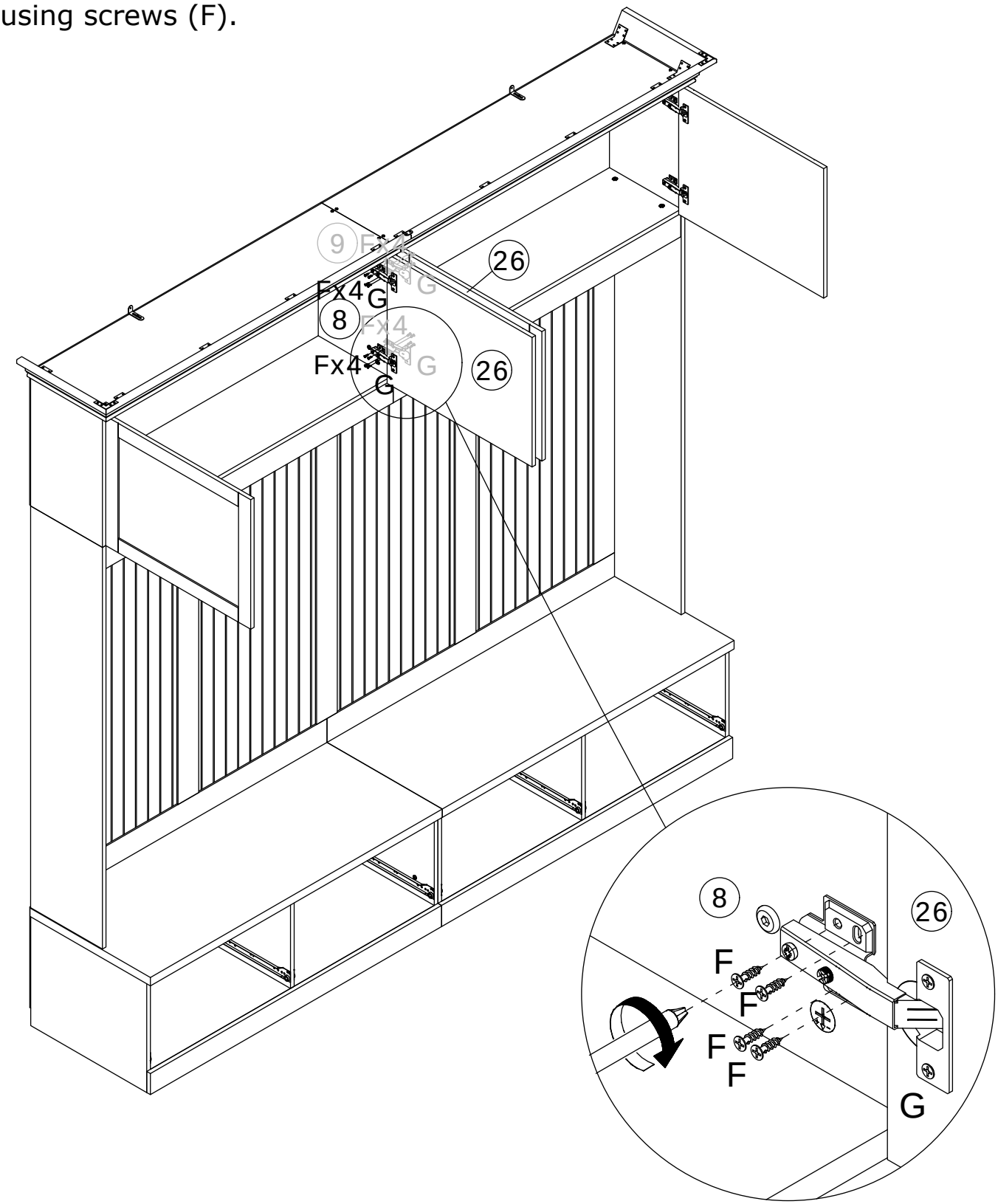

51

H x 8	Y x 16	
	CRD3514A	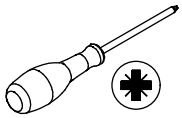

	E	F	Y
	CRD3512A	CRD3514A	CRD3514A

Mount hooks (H) to panels 31 and 32 using screws (Y).

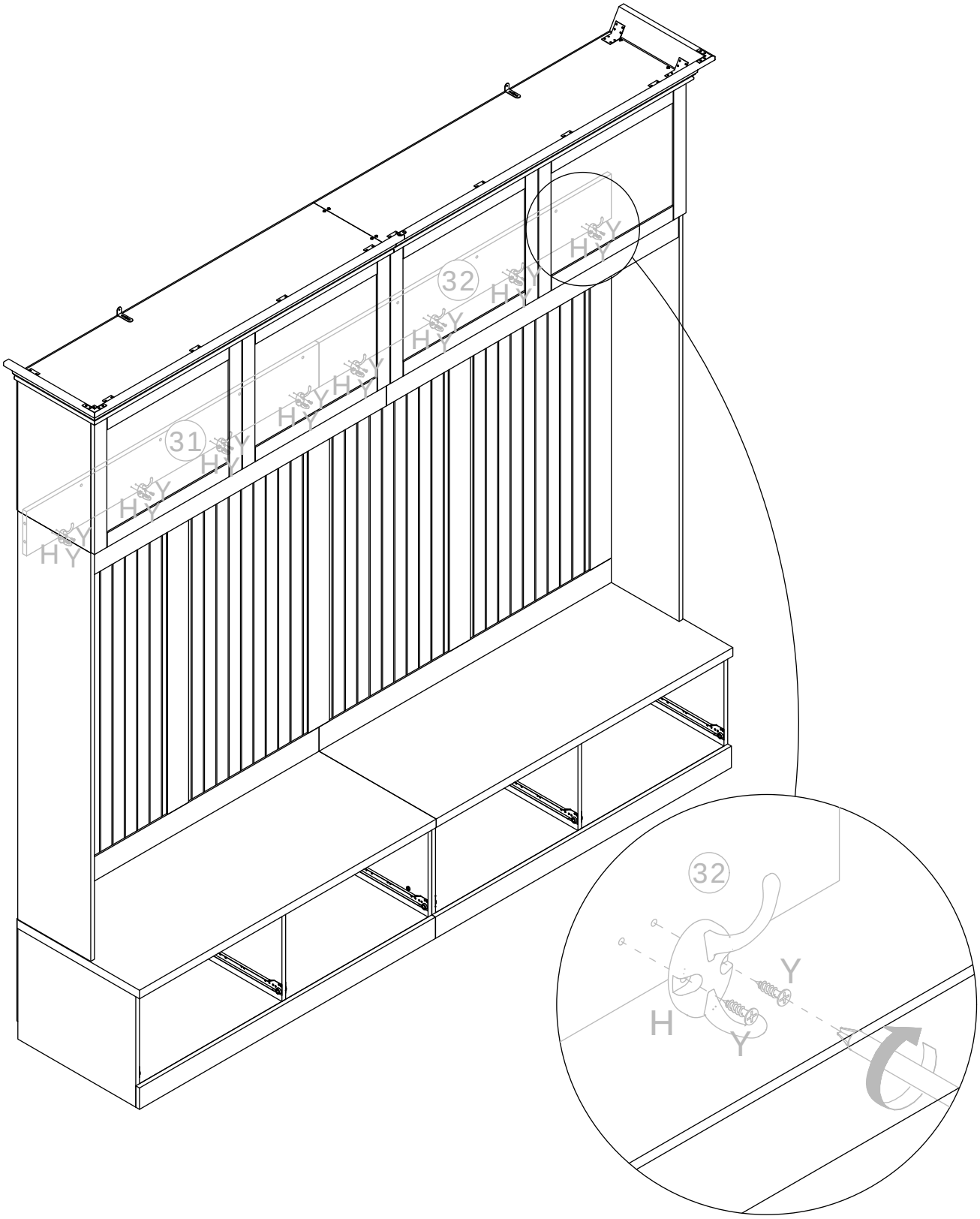

52

B x 20	C x 20	
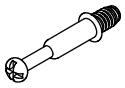 CRA0635B		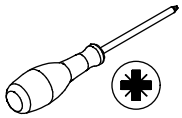

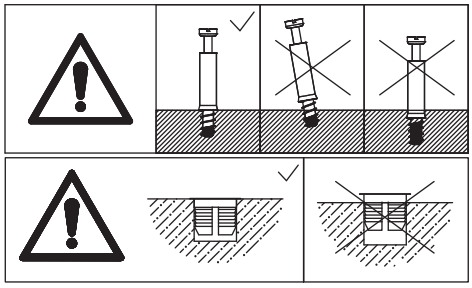

First install plugs (C) onto panels 24 and 25, then screw the self-tapping rods (B) into.

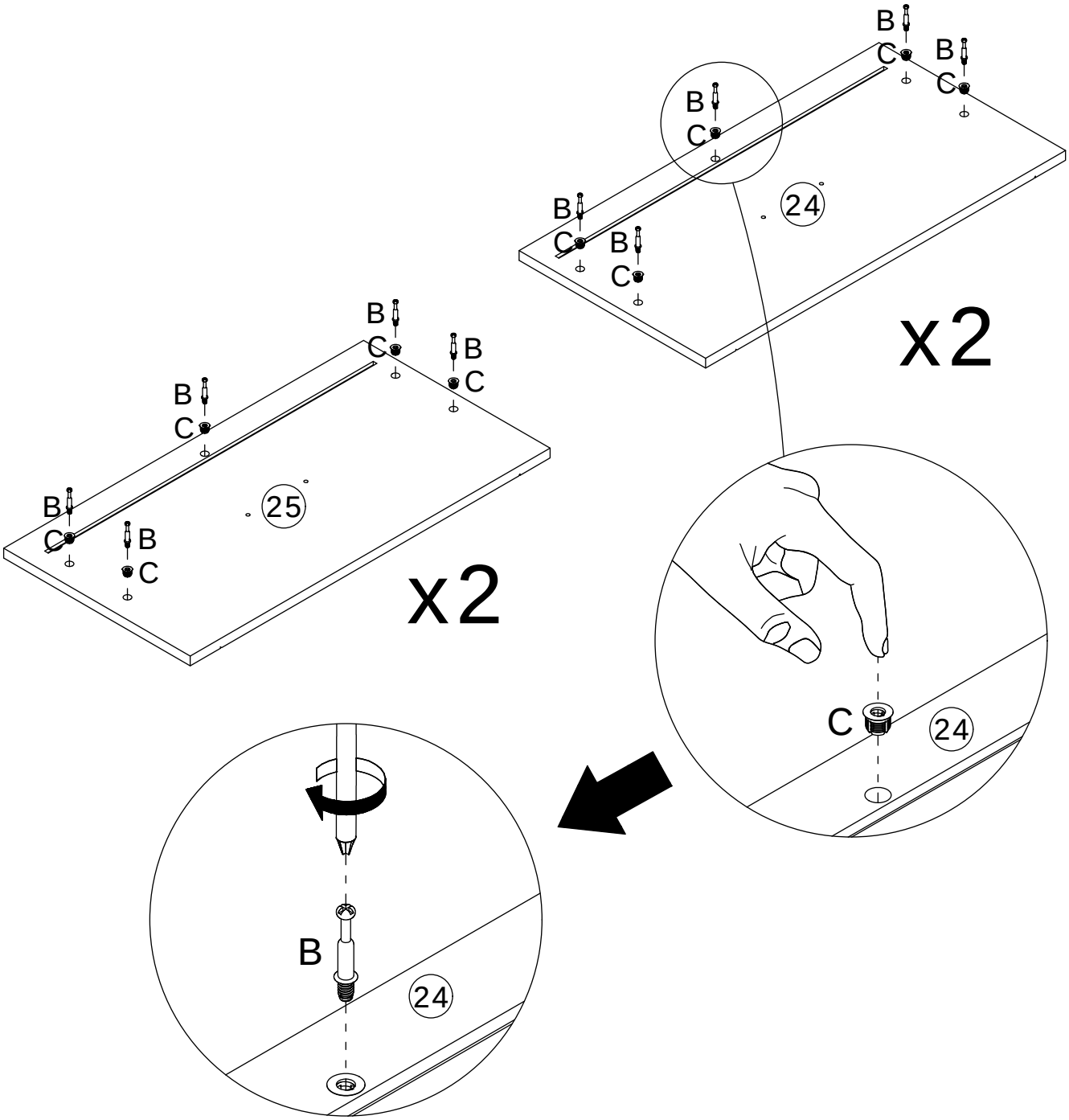

53

A x 20

CRB1595A

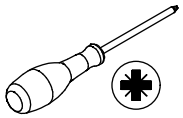

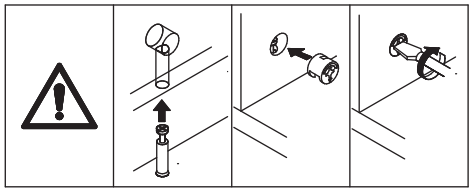

Connect panels 14, 15, and 21 to panels 24 and 25, then tighten by turning cam locks (A) clockwise.

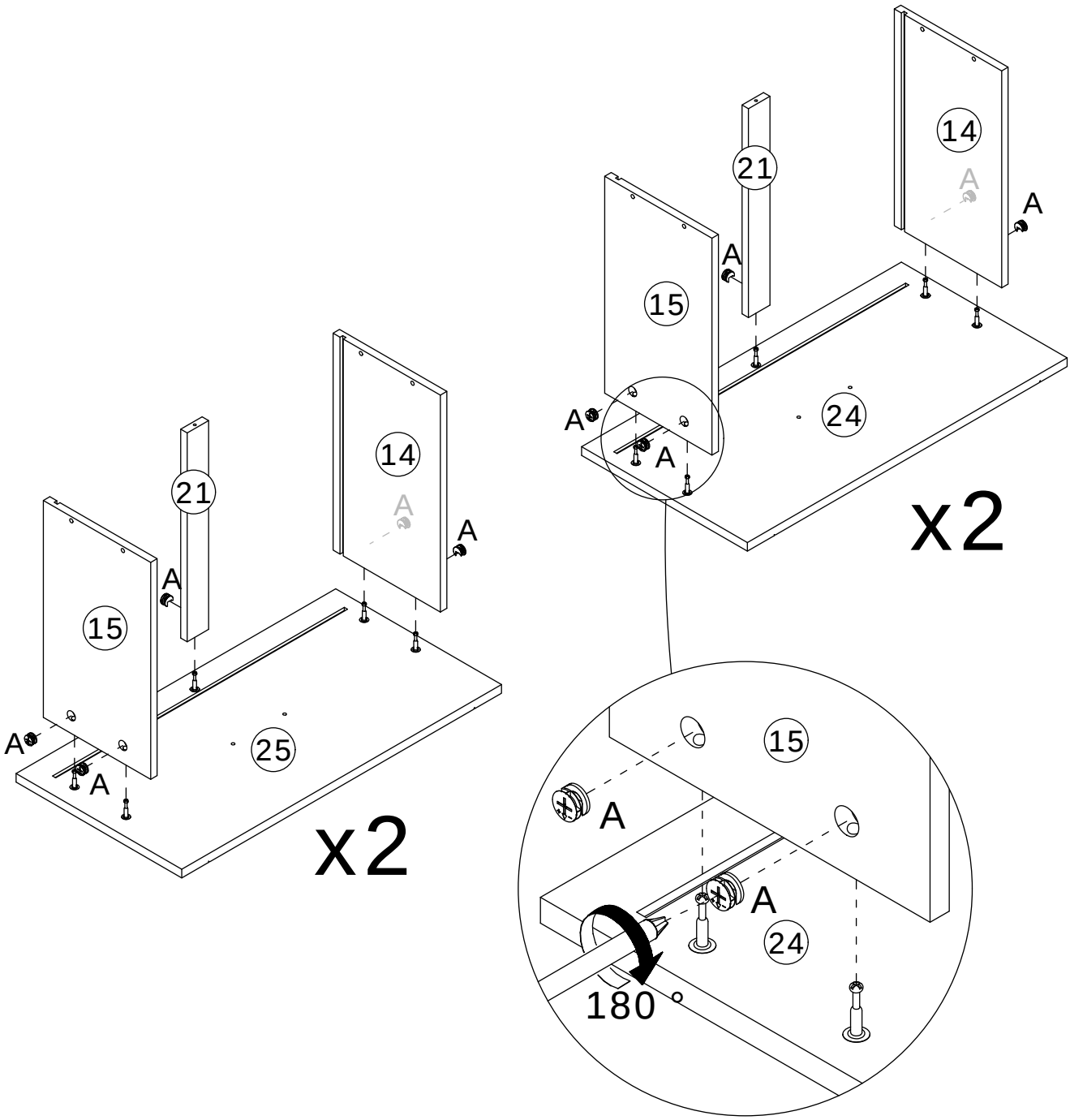

54

Insert panel 20 into the available slots.

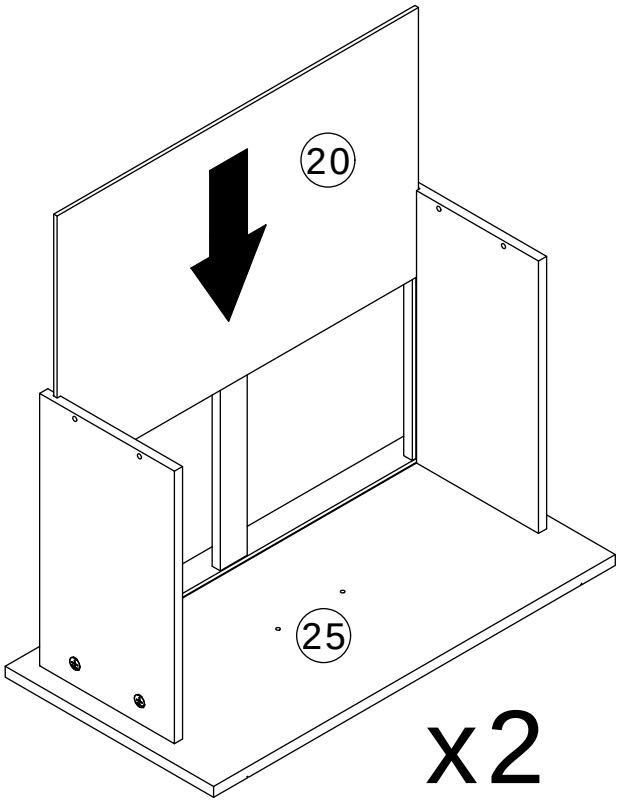

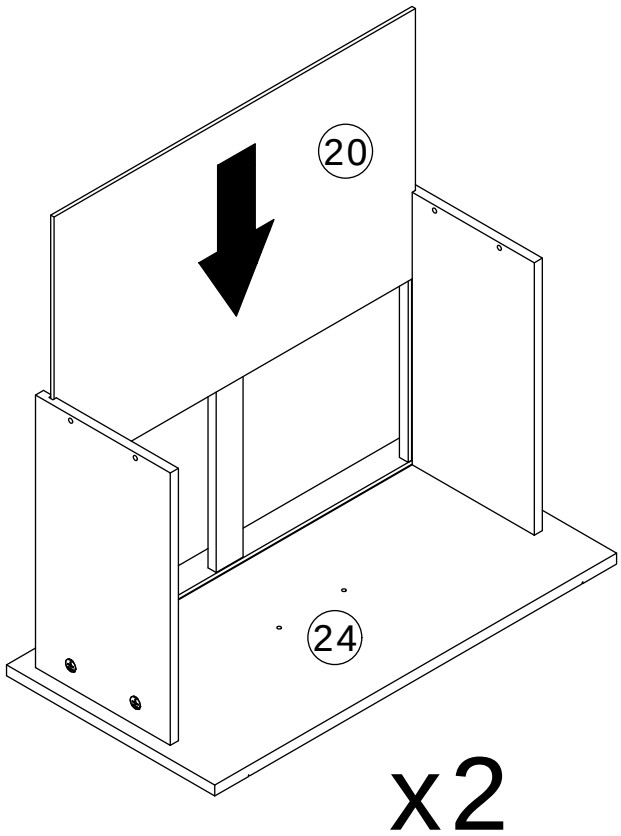

55

J x 20

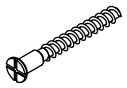

CRC0540A

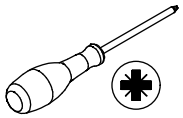

Secure panel 19 to panels 14, 15, and 21 using screws (J).

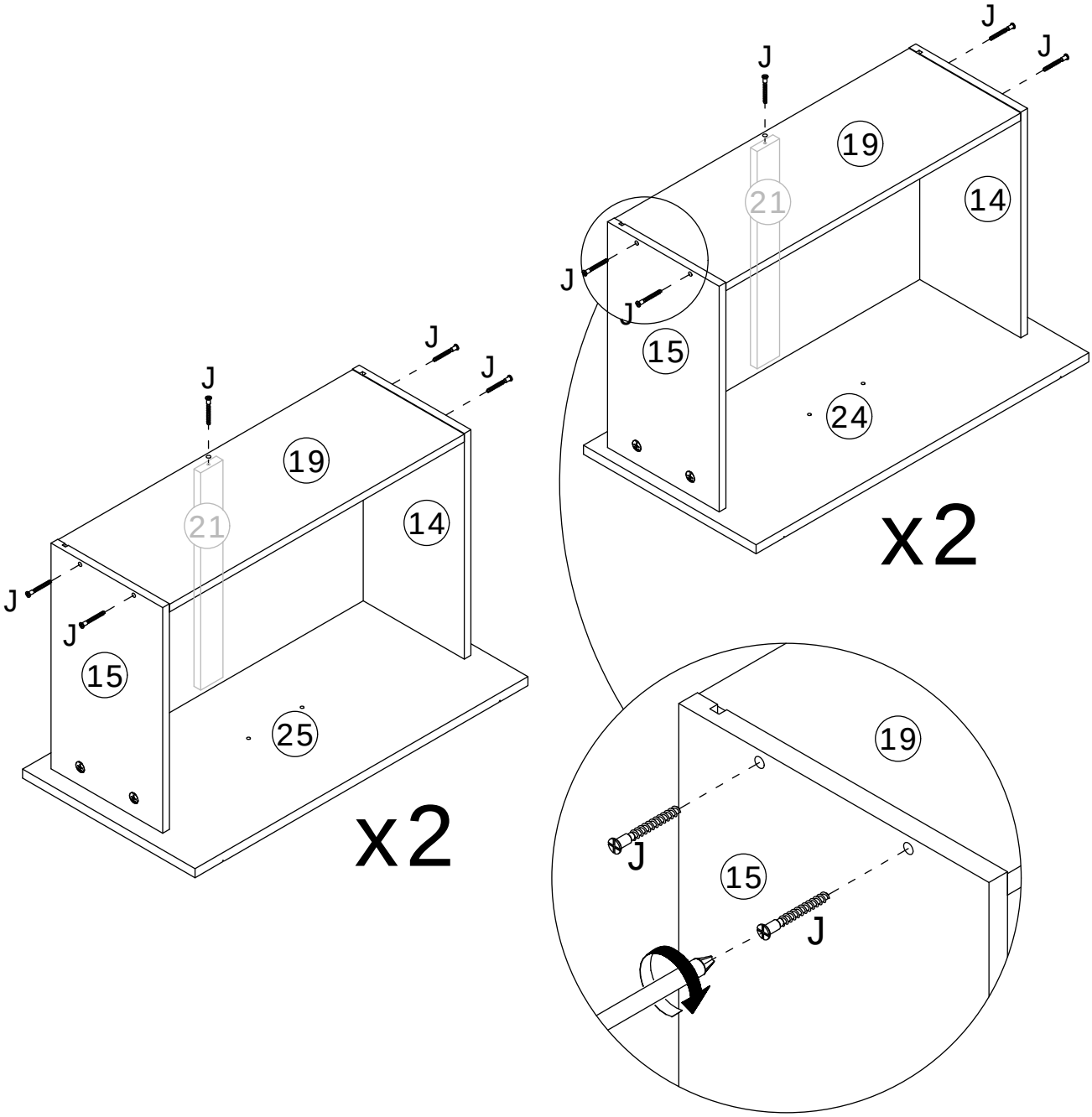

56

E x 16	W x 4	
CRD3512A	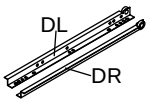 WX1014A	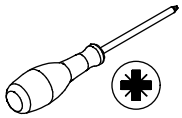

	E	F	Y
	CRD3512A	CRD3514A	CRD3514A

Mount slide rails (W-DL) and (W-DR) to panels 15 and 14 using screws (E).

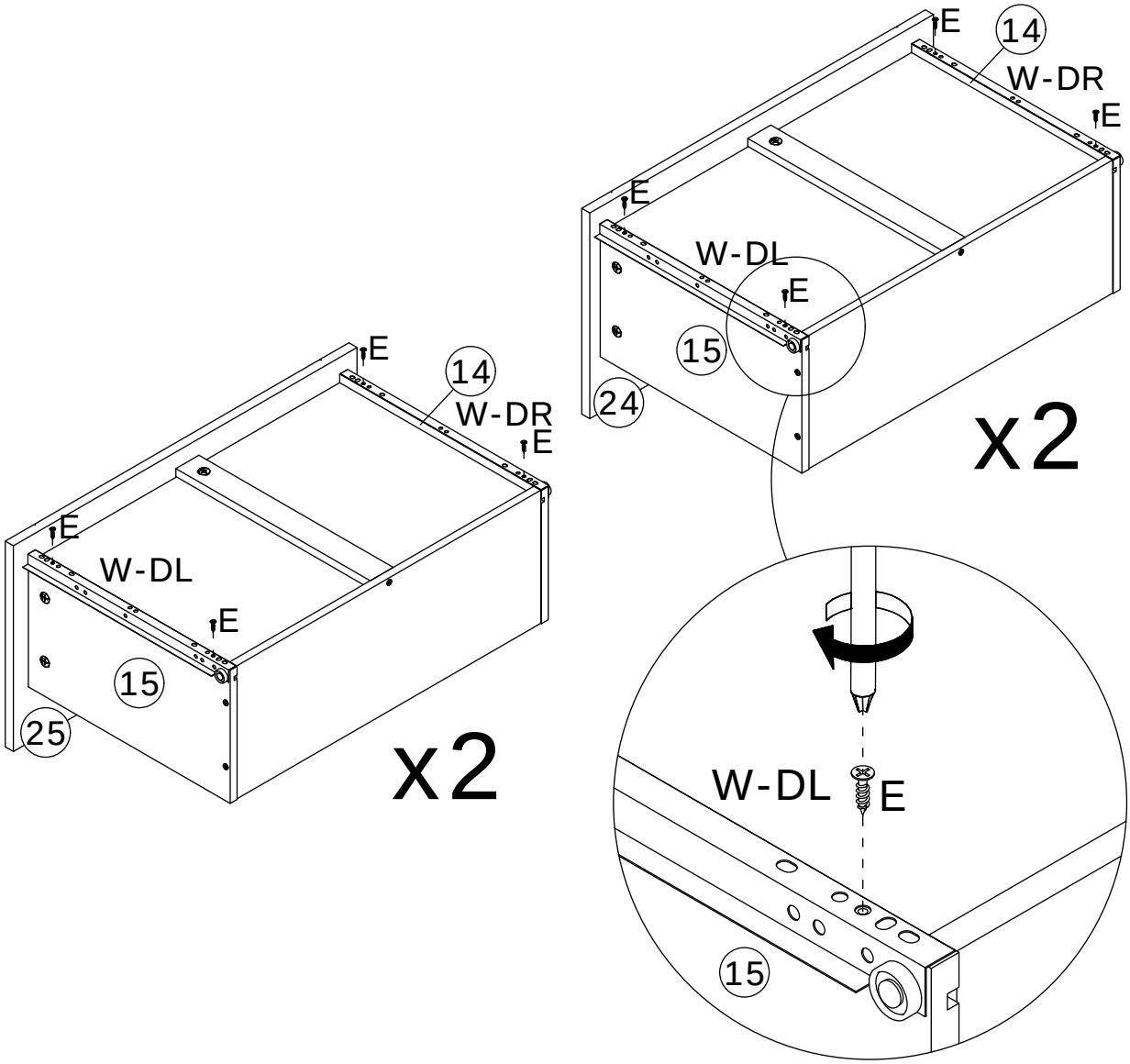

57

R x 4	S x 8	
	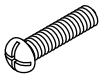 CRE0412A	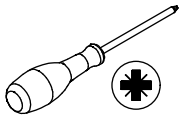

Secure handles (R) to panels 24 and 25 using screws (S).

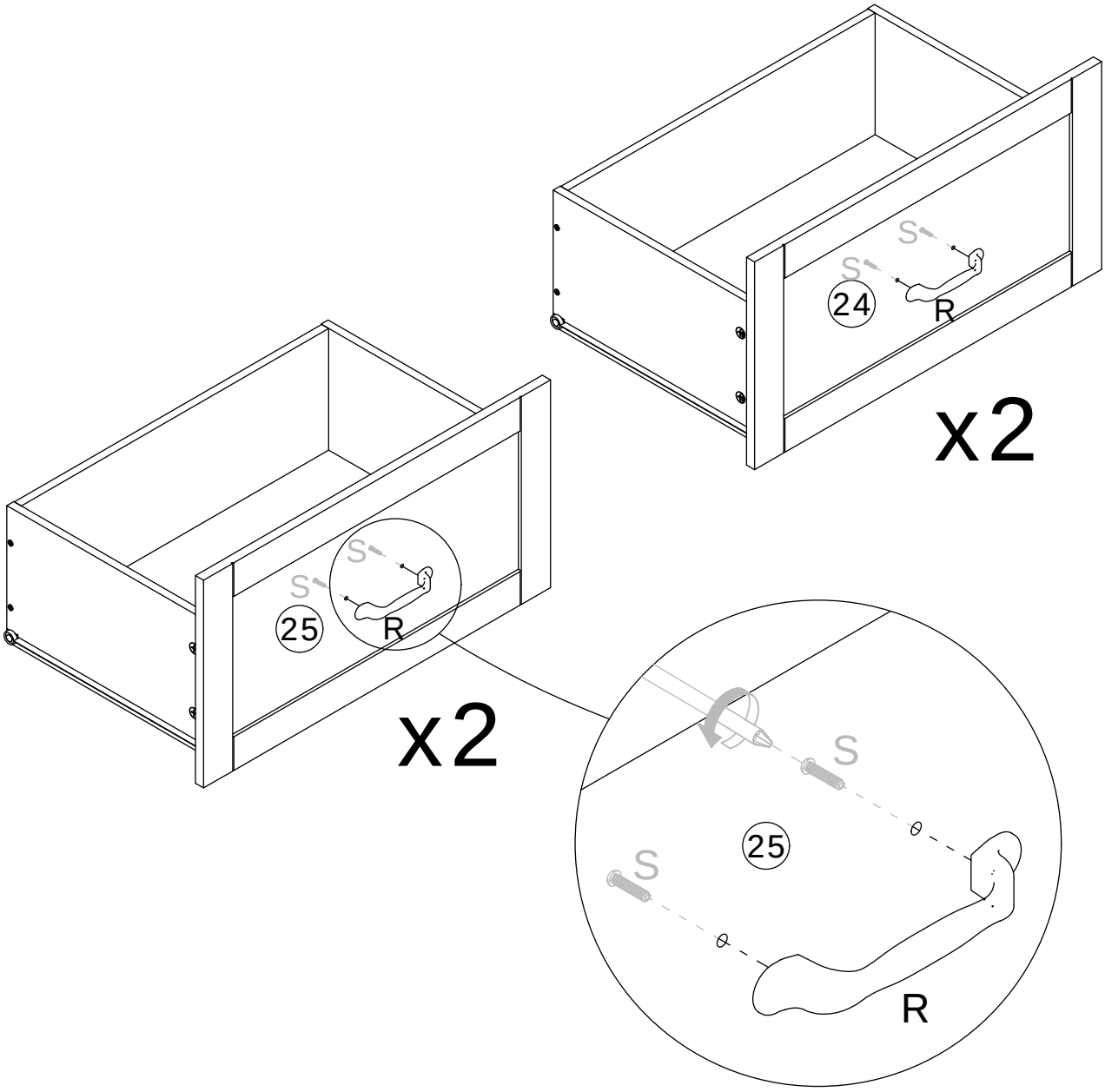

58

Assemble the drawers to the main unit.

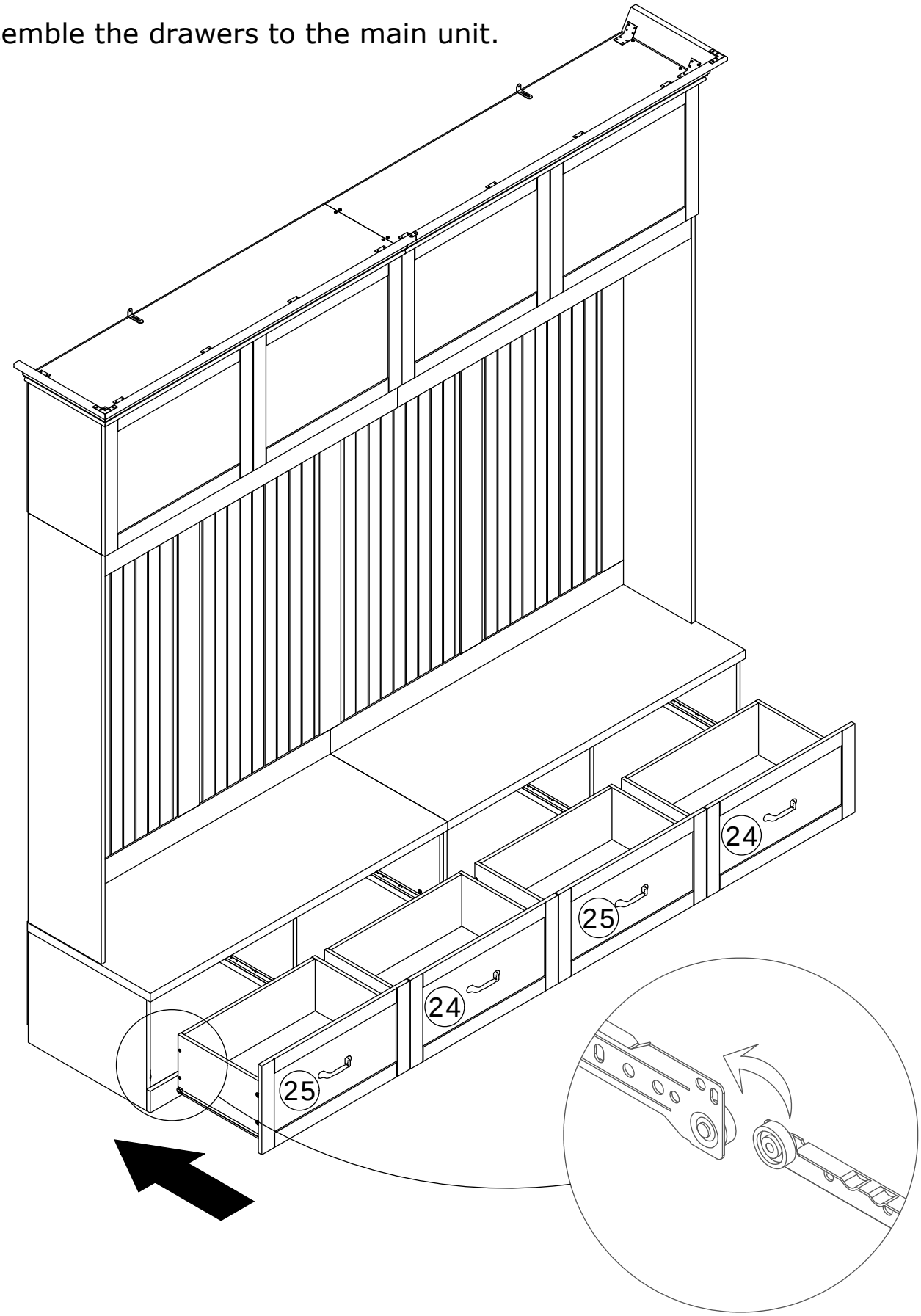

59

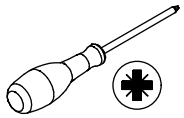

If there is misalignment after installation,
please adjust the screw to the best condition.

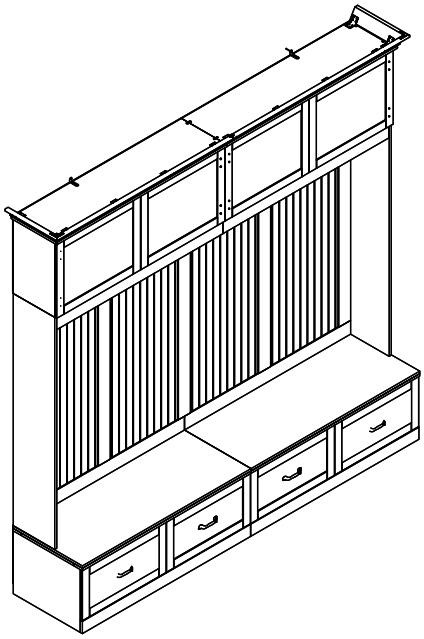

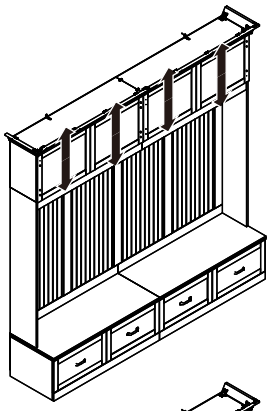

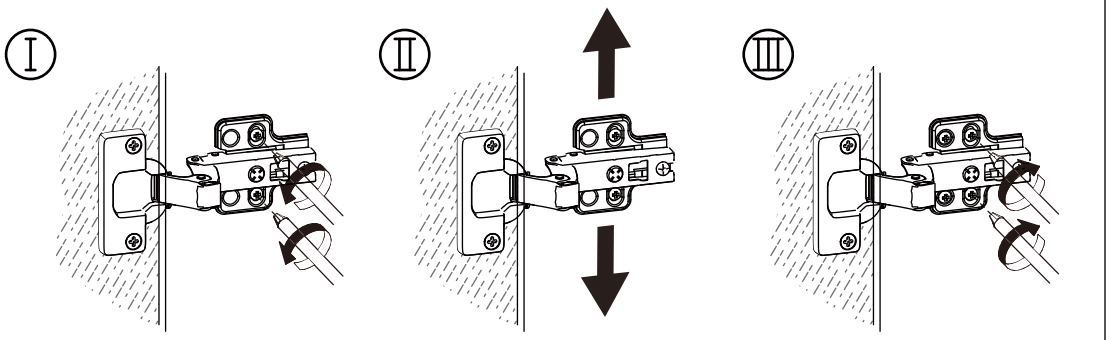

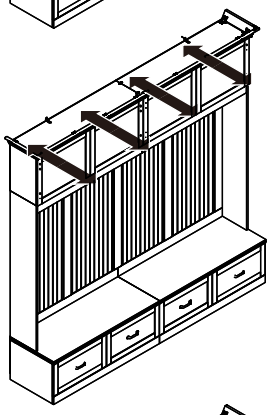

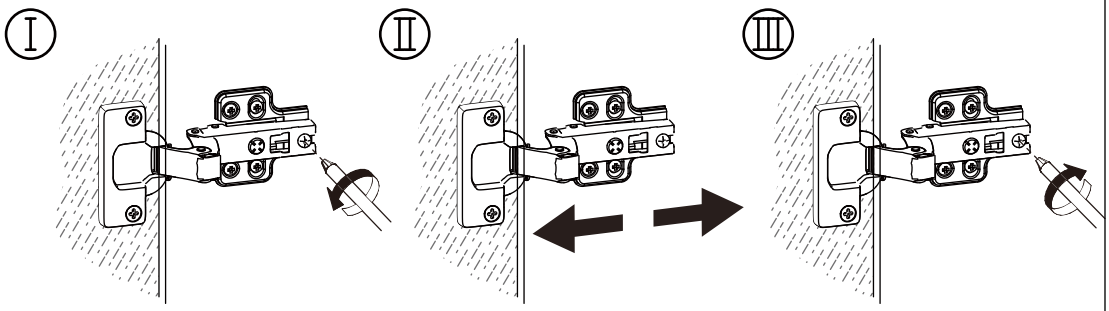

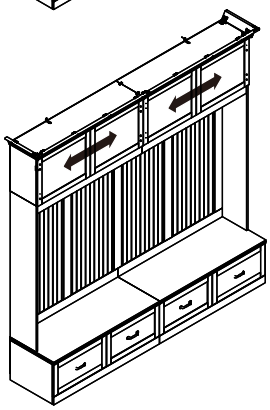

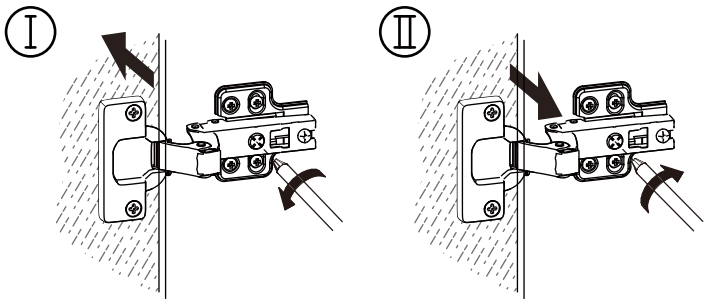

WARRANTY

WARRANTY CLAIMS

- There is a 30-day warranty for broken furniture or any other problems that do not work properly. The warranty will start from the date of purchase which must be verified by proof of purchase.

- Before making a claim, we may be able to answer your query, simply call us. Please leave your purchase order number, along with some details of the problem, if you want a replacement part. We will arrange within 48 hours. If there is out of stock, we will reply with a shipping date.

- The product must be used in accordance with the instructions provided. For health reasons.

- For other reasons, if the furniture needs to be returned, it must be cleaned and dried and operated within 30 days of receipt.

Type of Warranty Claim

- Failure to follow the furniture instructions will invalidate the warranty. Attention please.

- Does not include damage during installation, but includes damage during transportation.

Scope of responsibility

- Shall not bear any responsibility for misuse or user damage and / or loss of parts during the installation of furniture.

- After using, the damage and scratches of the furniture are not covered by the warranty.

The Warranty Relates to All Bought in The Us and Covers The Following Areas

- Sheet parts: 1 month from the date of purchase.

- Electrical parts: 1 month from the date of purchase.

RETURNS

CHANGED YOUR MIND AND NEED TO RETURN YOU ITEM?

PLEASE FOLLOW THE BELOW INSTRUCTIONS:

- If you have purchased and have simply changed your mind, follow the retailer's instructions for returns.

DEFECTIVE ITEMS

- If your item is defective in any way, i.e. it doesn't work but you can't identify why, in the first instance, please call us.

DAMAGED ITEMS

- If you receive an order with obvious shipping damage from the retailer, then we suggest the delivery is refused. If the delivery has been accepted and then shipping damage is found, please follow the specific instructions advised by the retailer.
  In all circumstances please save all packaging material and paperwork for the order. Please be aware that if you dispose of packaging material or attempt to return the merchandise without contacting the fulfiller, you jeopardise your chances of making a claim, and you may not receive a credit for the return.