Assembly Instructions

Caution: You must read this before you proceed

TABLE

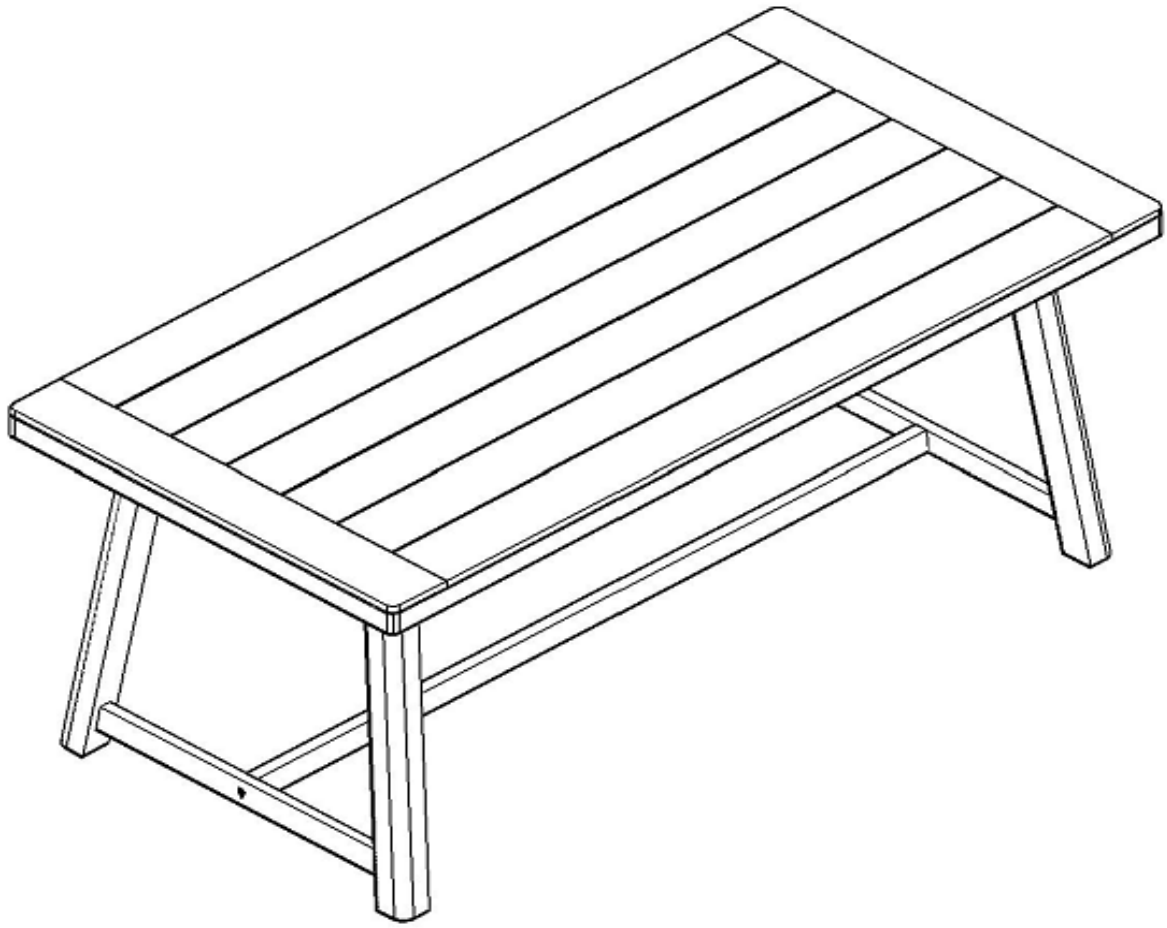

Caution: This Table is NOT a TOY.
Keep your child / children at bay during the assembly process.
Whenever lifting or moving the Table and to prevent damage to the Table, two adults may be needed to execute these actions.

Parts List

Label	Picture	Description	QTY
A	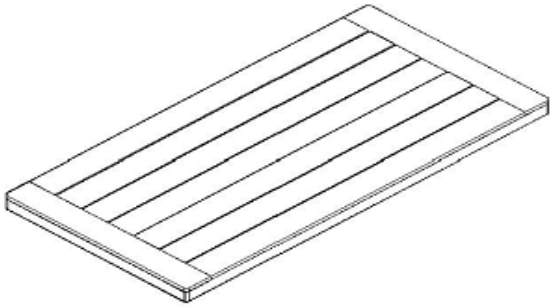	Table Top	1
B		Leg Panel	2
C	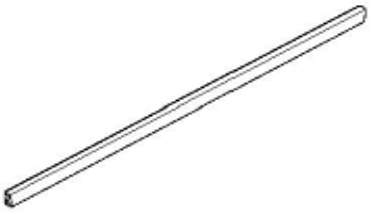	Leg Support Bar	1
D	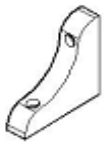	Corner Block	4

Hardware

Label	Picture	Description	QTY
①		Bolt (M8*55mm)	5
②		Screw (M6*40mm)	9
③		Screw (M6*60mm)	3
④	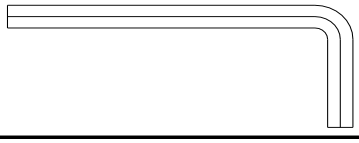	Allen Key	2

Assembly Preparation

Before Beginning Assembly:

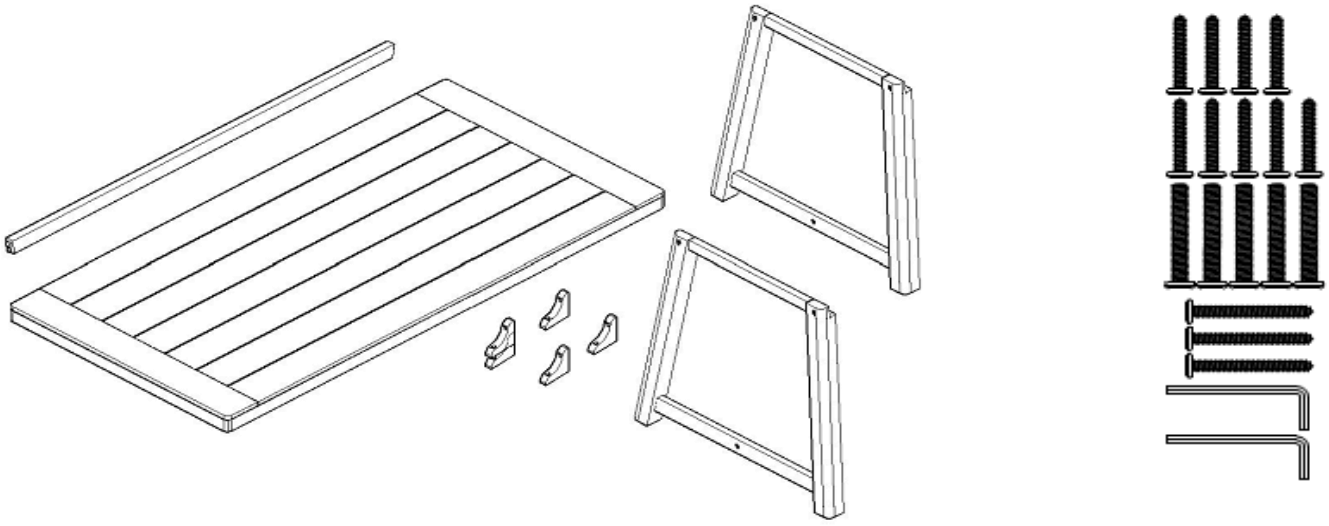

- Read instructions, cover to cover-
- Have 2 adults on hand for assembly-
- Do not assemble on flooring or carpet-
- Assemble on a clean non-marring surface (packing foam)-
- Save all packaging until finished-

Assembly Steps

Overview

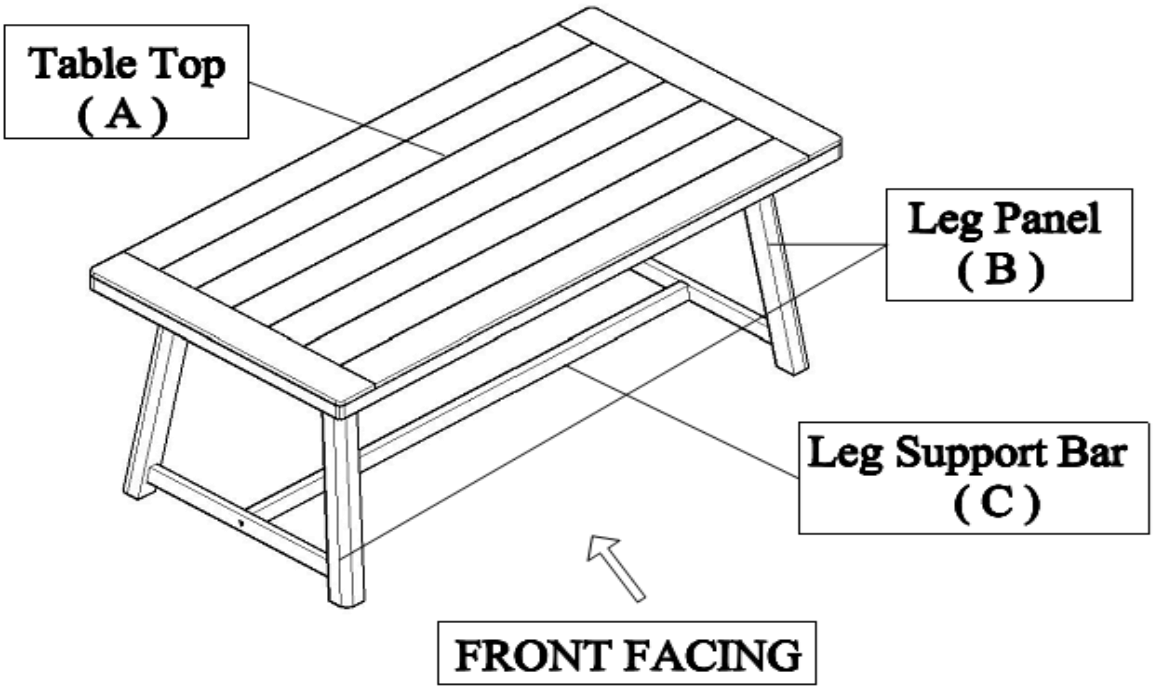

This Table has multiple parts and may require up to 30 minutes to assemble. To give you an overview of the Table parts, the above picture is to help you put the various parts into perspective. Please read through the instructions below to familiarise yourself with the parts and steps before assembly.

Step 1

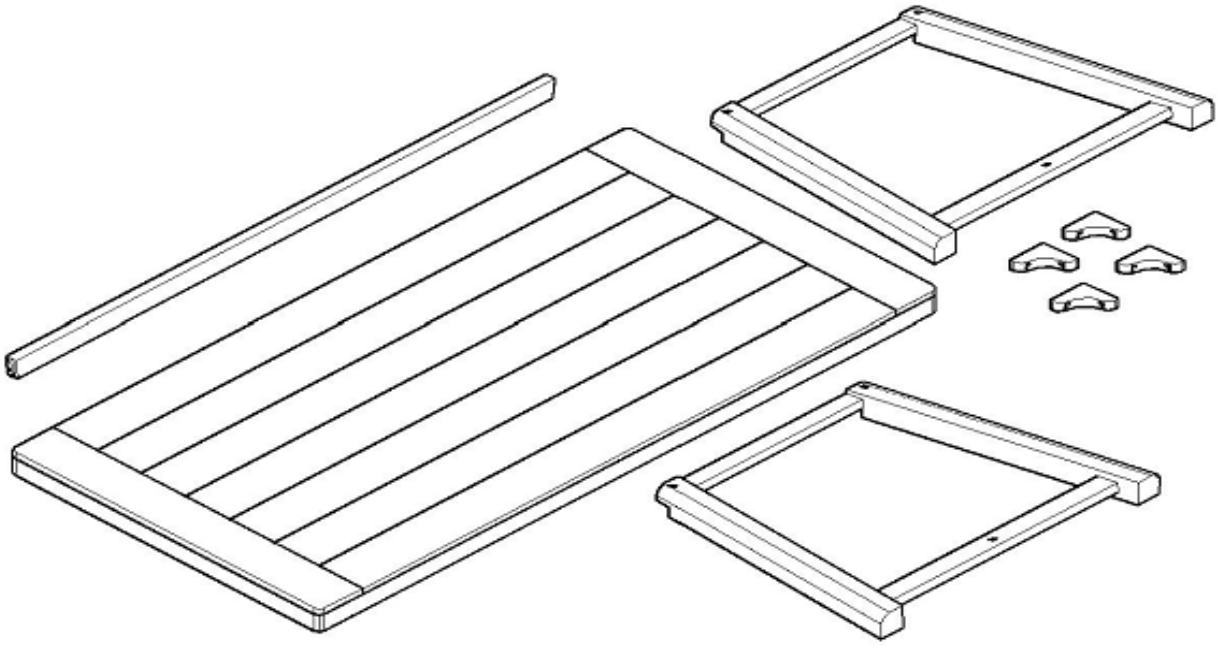

Unpack and place all parts on a clean, non-marring surface.

Step 2

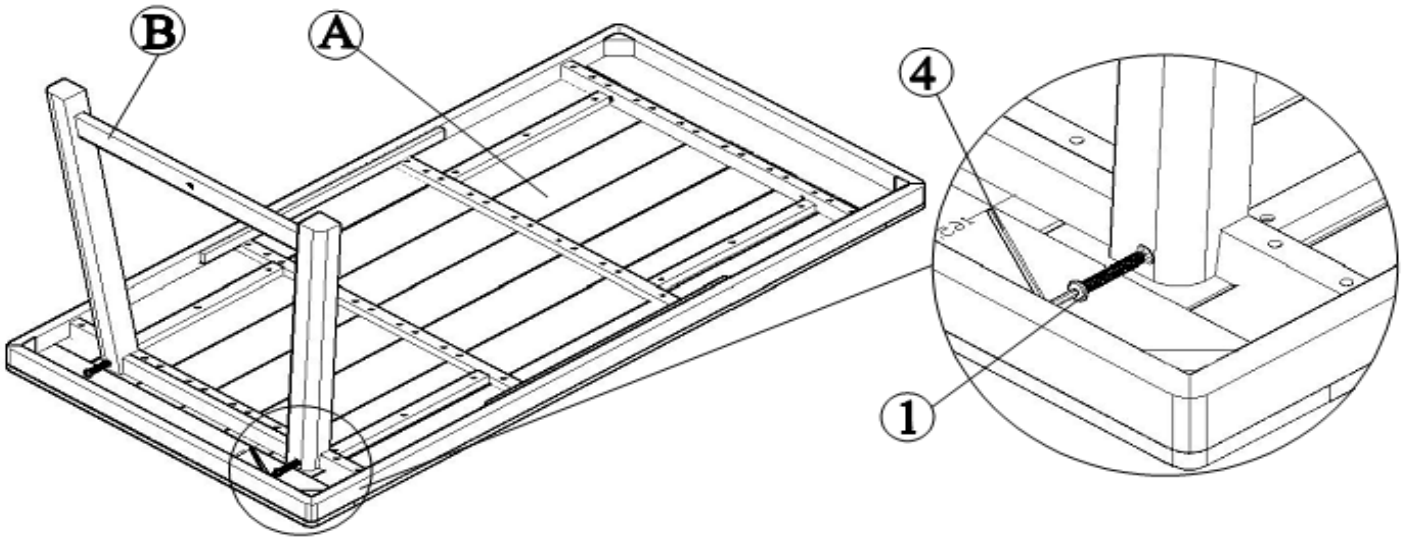

Attach Leg Panel(B) to Table Top(A) using Bolts(①) with Allen Key(④) as shown above.

Do not fully tighten the Bolts.

Repeat the same process with the remaining Leg Panel(B).

Step 3

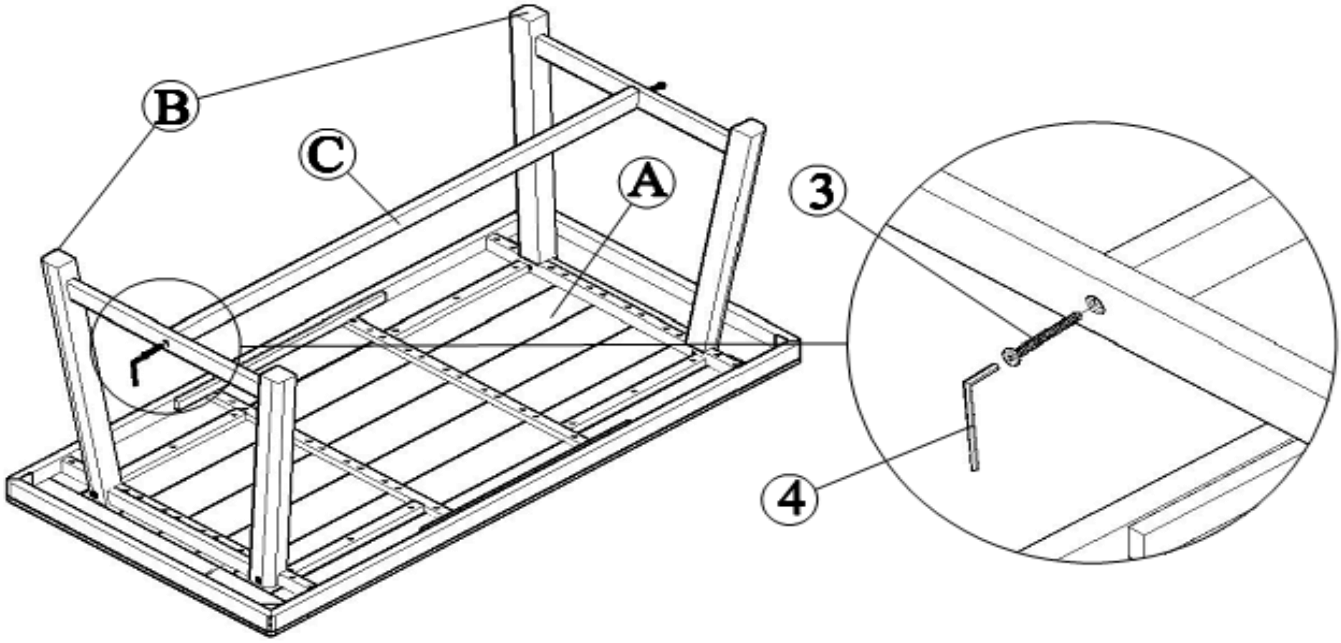

Insert the tenons on the Leg Support Bar(C) into the mortises of the Leg Panels(B). Attach Leg Support Bar(C) to Leg Panels(B) using Screws(③) with Allen Key(④) as shown above.

Do not fully tighten the Screws.

Step 4

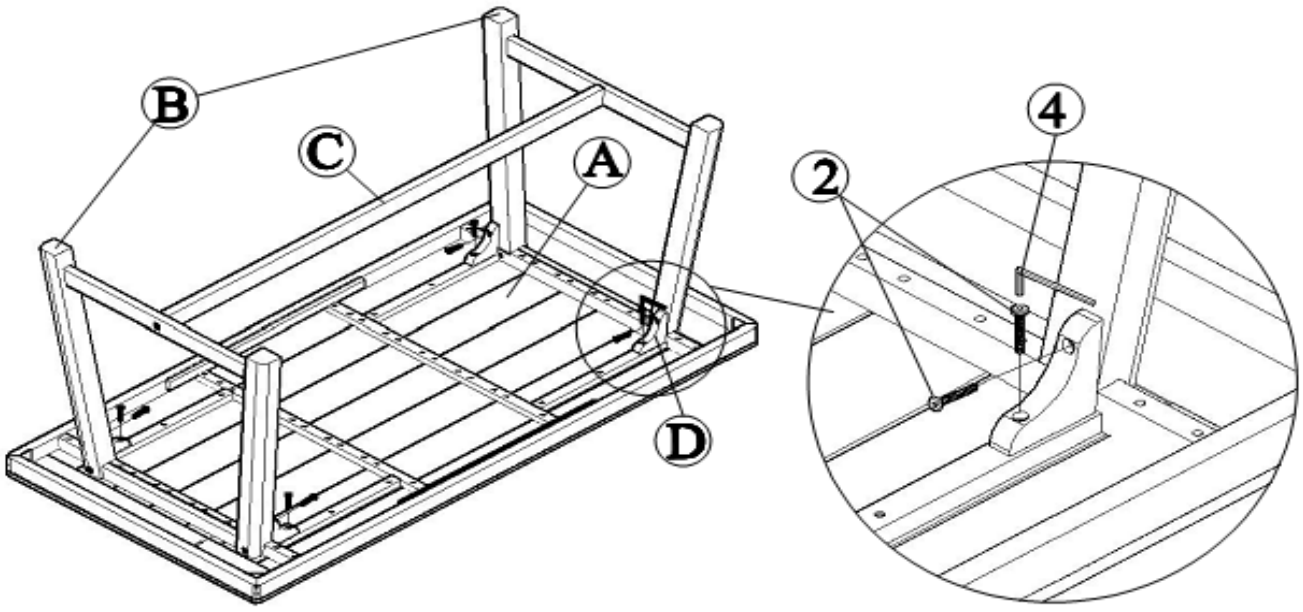

Align the Corner Blocks(D) to the Table Top(A) and Leg Panels(B) and attach using Screws(②) with Allen Key(④) as shown above.

Do not fully tighten the Screws.

Step 5

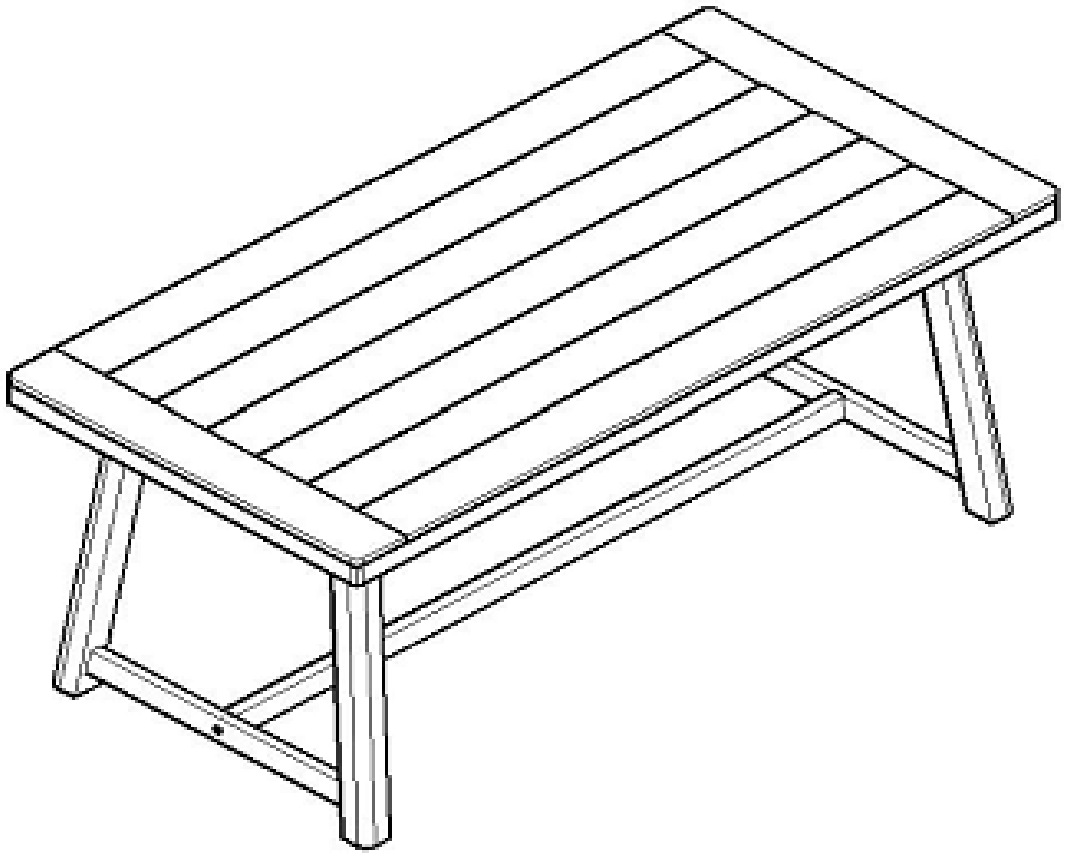

Stand the Table up, with assistance from your adult partner.
Exert pressure floorwards, onto the Table with both your hands.
This pressure will help the Legs and Table Top reach full alignment status.
Check for wobbles on a LEVEL surface.
If no wobbles are found proceed to tighten the Bolts and Screws in a sequential manner, until evenly secured.
When tightening the Bolts and Screws tighten sequentially.
Do not tighten any Bolt or Screw fully and then move on towards the next one.
If there are still wobbles, loosen the Bolts and Screws and excute the same above process.
Your Table is ready for use.
This Table can only be used on a flat, level surface.

Care & Maintenance

- Do not put hot items directly on furniture surface.
- Do not clean furniture with harsh cleansers or polish.
- To obtain the longest lifespan of your outdoor prodcts, minimizing exposure to direct sunlight is recommended.
- Children should not climb or jump on the furniture.
- Do not write on furniture without a padded barrier to protect the surface.
- To obtain the longest lifespan of your outdoor products, avoid extended and lengthy exposure to rain, snow, and direct sunshine. Whenever possible cover the product and /or place under patio or awnings.
- Not for commercial use. For residential use only.
- Stains may be removed with mild soap solution and damp cloth.
- Dust and pick-up spills using a clean, non-colored, lint-free cloth .