MADE IN CHINA

P53002-3WD

OPERATIONS MANUAL

INSTRUCTION

Assembly &Installation Instructions

Dear Customer：

Thank you for choosing us! We truly appreciate your business and your trust. If you have any questions or encounter any issues, please don't hesitate to reach out. You can contact us by email at support@4modernhome.com or by phone at 469-312-6428. Our team is committed to ensuring your complete satisfaction. We also value your feedback, as it helps other customers make informed decisions. If you're happy with your purchase, we'd be grateful if you could take a moment to leave a brief product review on the platform where you made your purchase. Once again, thank you for choosing us. We look forward to serving you again!

Best regards,
The Support Team

Warning: If any special control devices are used with this fixture, follow the instructions carefully to assure full compliance with N.E.C. requirements.If there are any questions, contact a qualified electric contractor.

Warning: California Residents Proposition 65
This product contains lead, a chemical known to the state of California to cause cancer and birth defects or other reproductive harm. Do not place the product in your mouth. Wash your hands after handling this product.

Caution: It is highly recommended to get an electrician to install this light.Please makesure to turn the electricity off at the main circuit breaker before beginning installation. All glass is fragile.Use care when handling glass component(s) and/or lamp(s).

Applicable bulb
type:B10,B11,C35,C7,C9...
(Excluding bulb)

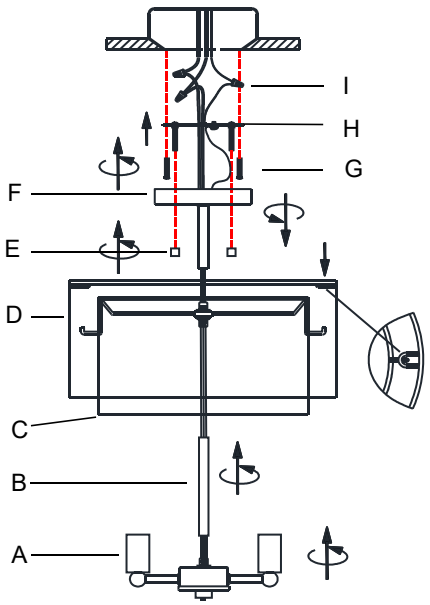

1.Unpack all parts from cartons carefully.
2.Tighten the lamp socket(A)into the tube(B)until tight.
3. Tighten the tube(B)onto the shade(C)until tight.
4. Tighten the Canopy onto the shade(C)until tight.
5. Hanging the lampshade(D) on the lampshade(C)
6.Fix mounting bracket(H)to outlet box with screws(G).
7.Connect the wires
8.Fix canopy(F) to mounting bracket with nuts(E).
9.Install the light bulbs(not included).

CAUTION : Risk of fire

Please read all instruction carefully.Before you proceed to install,make sure that the power supply is turned off and remains off until installation is completed.

PARTS INCLUDED

Code	Part Description	QTY
A	Lamp socket	1
B	Tube	1
C	Shade 1	1
D	Shade 2	1
E	Ball nuts	2
F	Canopy	1
G	Mounting screws	2
H	Mounting bracket	1
I	Wire caps	3