STEP 1

1. Attach Mounting Plate (B) to the Base (C) Using bolt M6 x 40mm (D) Lock washer M6 (E) flat washer 13 x 6 x 1 (F) Allen Key 4mm (G) Clockwise to tighten as shown below

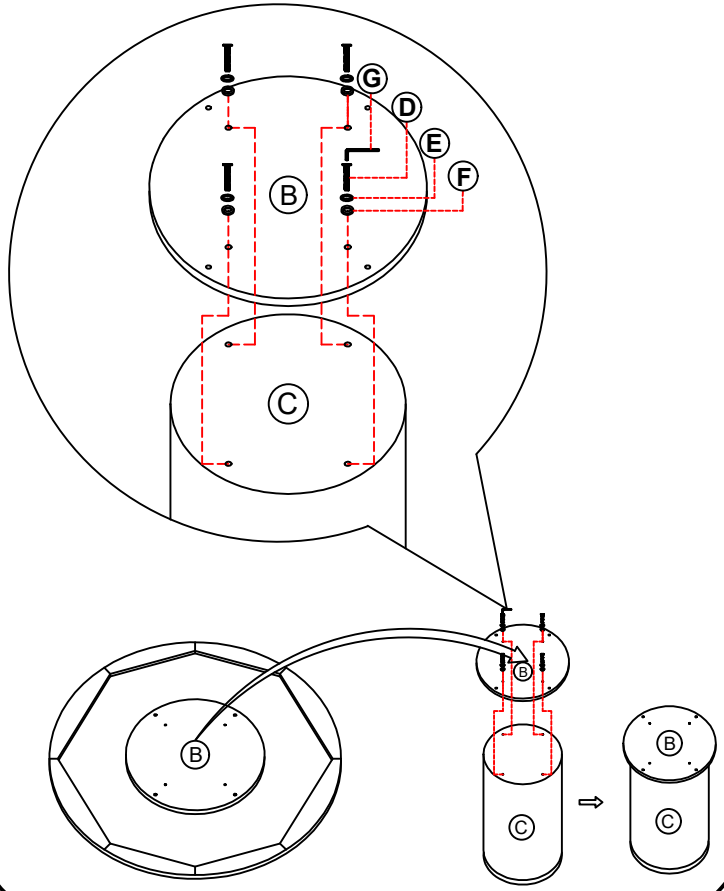

STEP 2

2. Attach Base (C) Mounting Plate (B) to the Top Table (A) Using bolt M6 x 40mm (D) Lock washer M6 (E) flat washer 13 x 6 x 1 (F) Allen Key 4mm (G) Clockwise to tighten as shown below

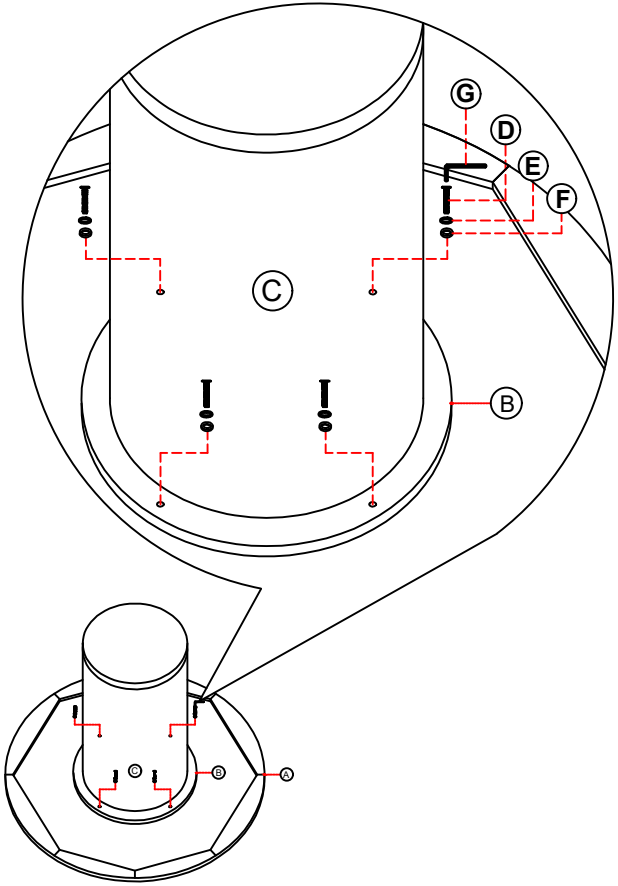

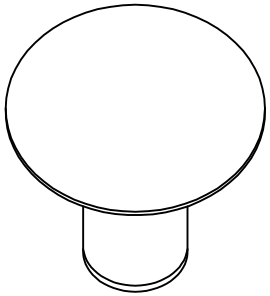

Round Dining Table

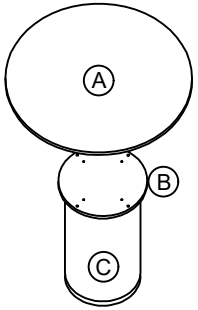

ITEM	DESCRIPTION	QUANTITY
A	Top Table	1
B	Mounting Plate	1
C	Base	1
D	Bolt M6 x 40mm	4
E	Spring Washer M6	4
F	Flat Washer M6	4
G	Allen Key 4mm	1

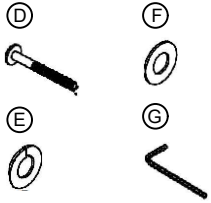

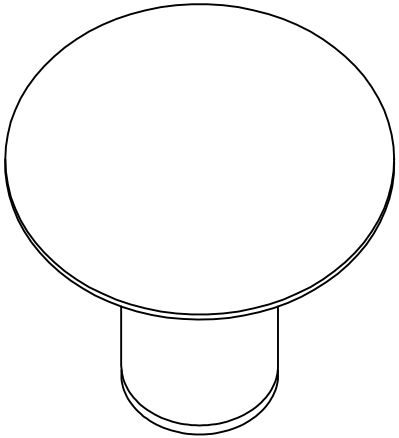

Congratulations

Assembly complete,Your Dining Table is ready to use.

(*) Caution : DO NOT OVERTIGHTEN

In any correspondence regarding this product, please include the complete Butler identification number located on the underside of the product.

We hope this product will be a useful and decorative addition to your home fo years to come.