N735P525143

Tools You Will Need:Tools You May Need



Hexagon wrench

Before the Installation

1.Do not throw away packing materials until assembly is complete for small parts may come loose inside the carton during shipment,If parts are missing,please contact us.
2.Assemble this item on a soft surface,such as carpet to protect the finish.
3.Proper assembly of this item requires2people.
4.Periodically check to ensure thatallconnectionsaretight.
5.It is recommended that installation of the product be done by a qualified icensed furniture assembler.

Care and Cleaning

1.To protect the finish,avoid use chemicals and household cleaners.
2.All hot serving dishes should be placed on a pad.
3.Any liquid spilled onto the top should be cleaned up immediately with a damp cloth.

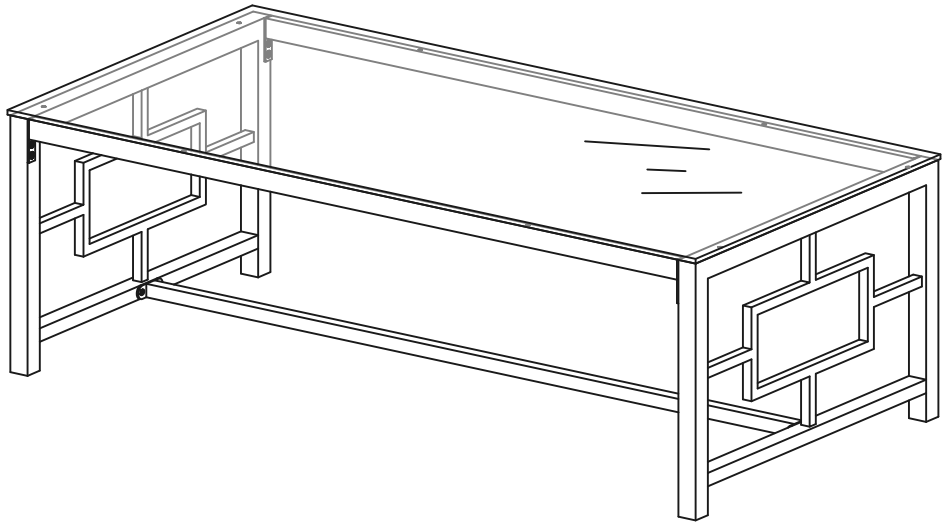

Note:Do not fully tighten all bolts until all parts are in place.Failure to follow these instructions may cause the bolt to misalign during assembly

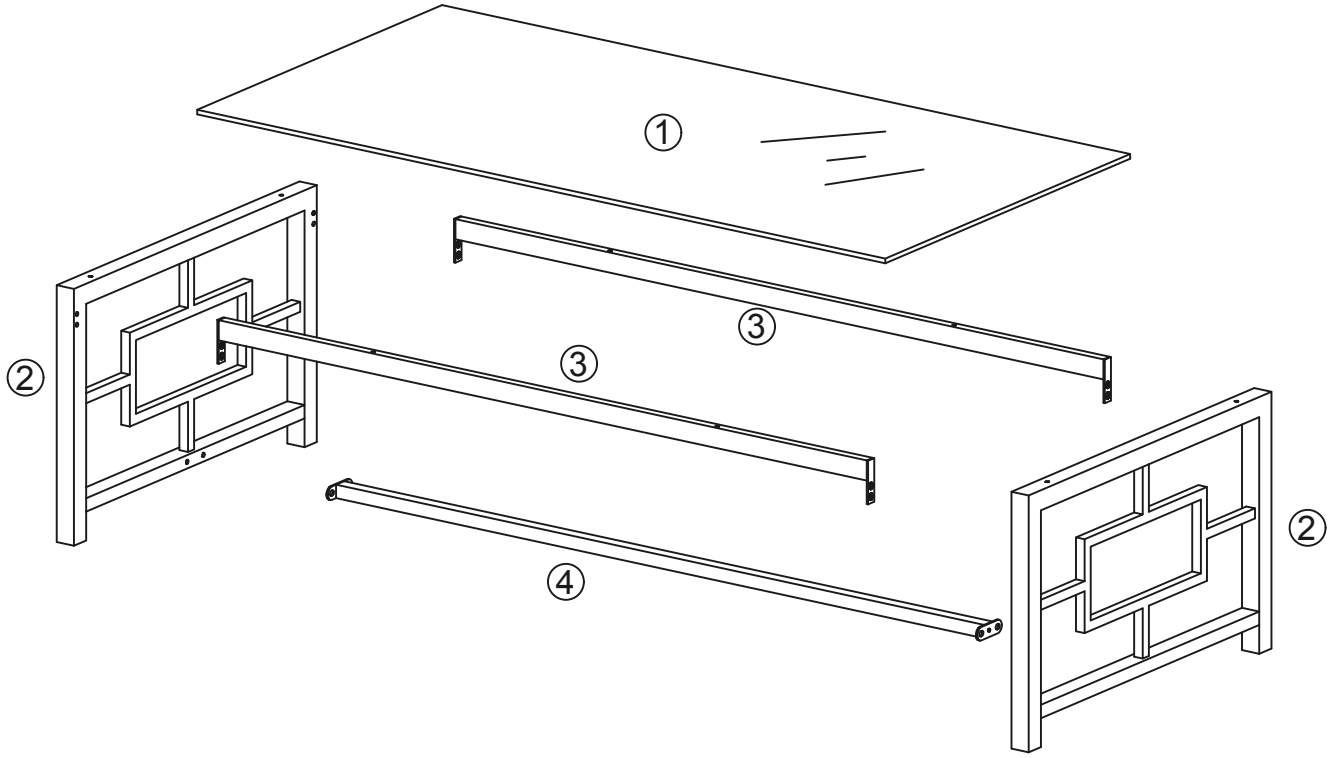

Parts List

① x1	② x2
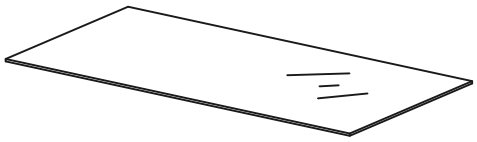	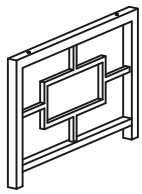
③ x2	④ x1
	

Hardware List

A	B	C
 M6x12mm x12	 x8	 M4 x1

STEP 1

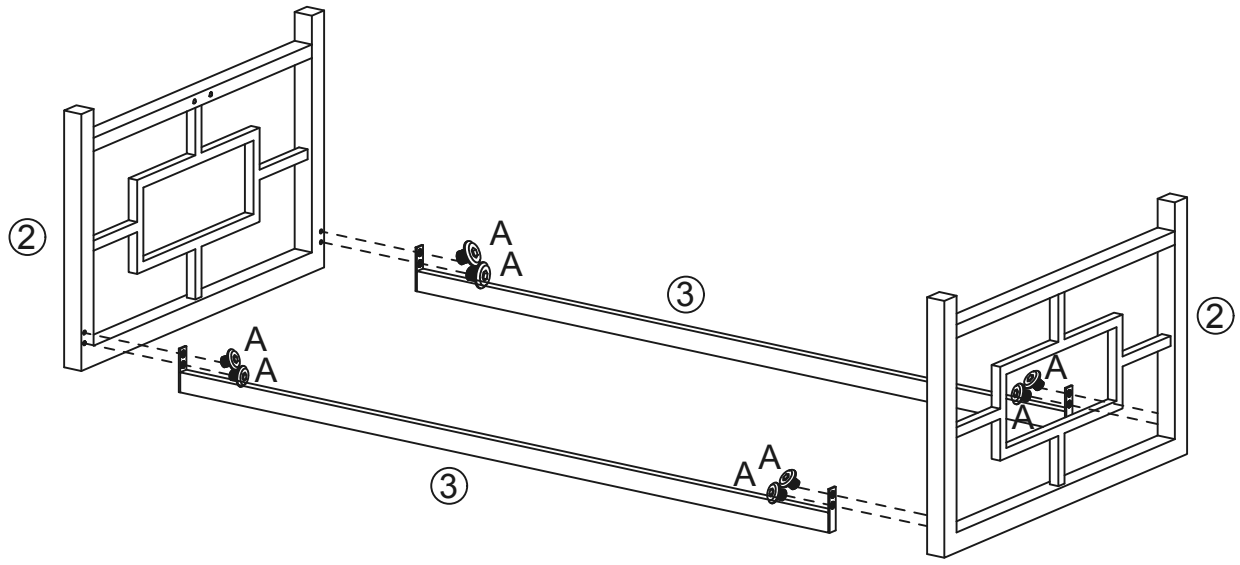

A



M6x12mm x8

STEP 2

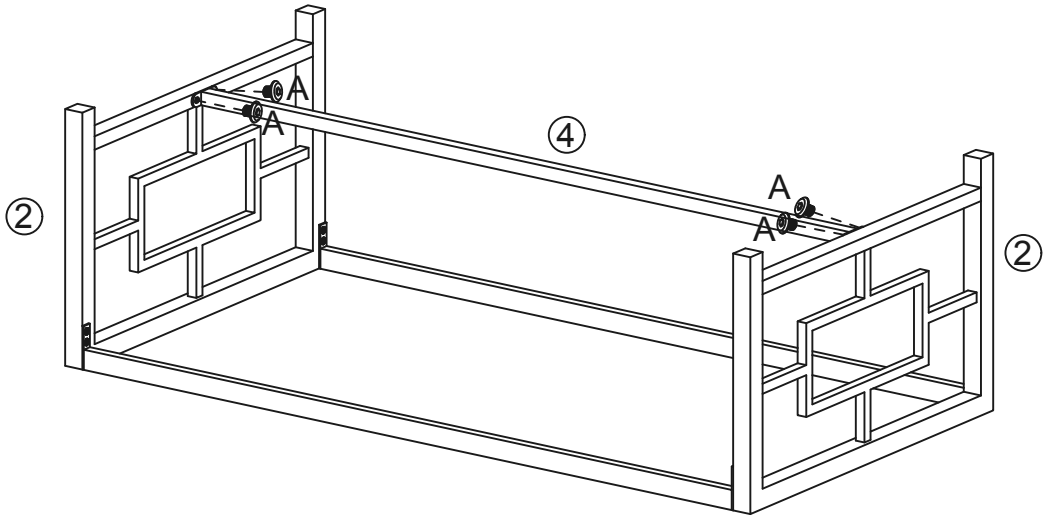

A



M6x12mm x4

STEP 3

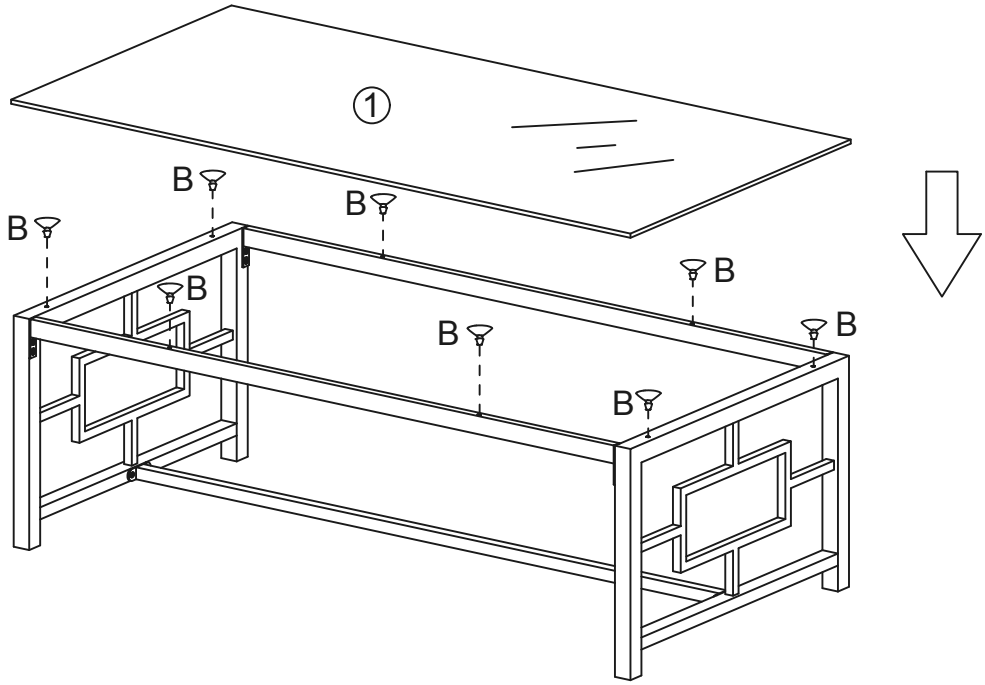

B

x8

