Assembly Instruction

A	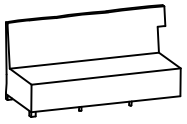	1
B	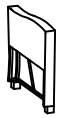	1
C	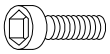 M6*40	5
D		5
E	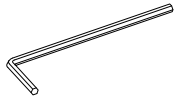	1

①

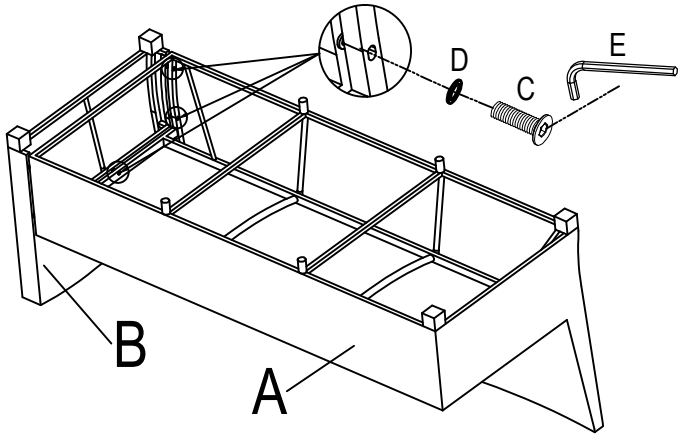

②

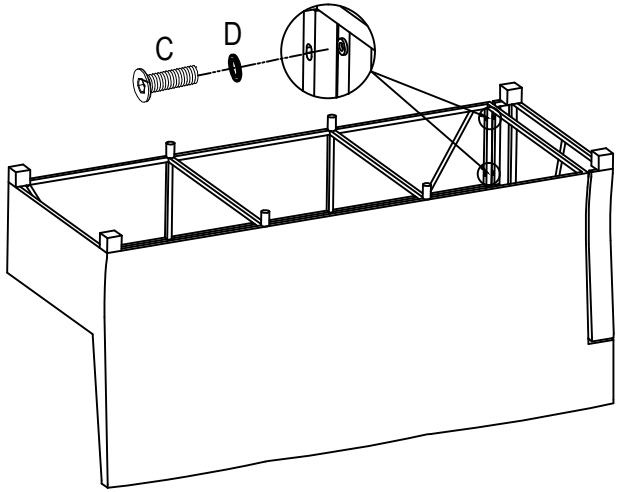

③

