OAKMET84ATQZ

BATHROOM VANITY SET
SKU: OAKMET84ATQZ

Colors/Finishes: OAK
Nominal Dimension:84W*22D*35H inches

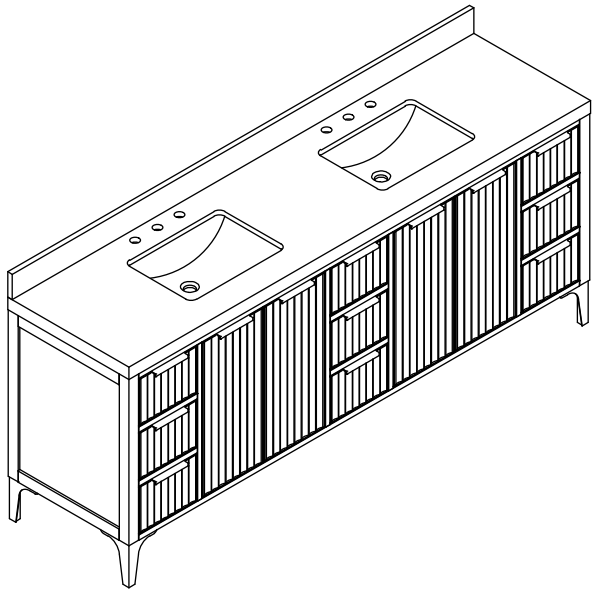

VANITY FEATURES:

1.Material: Oak wood frame, high-quality venner plywood.
2.Doors: 4 soft-close doors, Austria BLUM Soft-close hinges system.
3.Drawers: 9 soft-close drawers ,DTC concealed soft-close sliders.
4.Installation Type: Freestanding
5.Built-in Adjusters: Adjustable height levelers
6.Vanity Top: High-quality quartz with two undermount sink
7.Assemble required: No
8.Vanity top Included: Yes
9.Mirror Included: Optional
10.Medicine Cabinet Included: Optional

Contents

84″Vanity……PAGE 7
84″Vanity Top……PAGE 8
Vanity Installation……PAGE 2

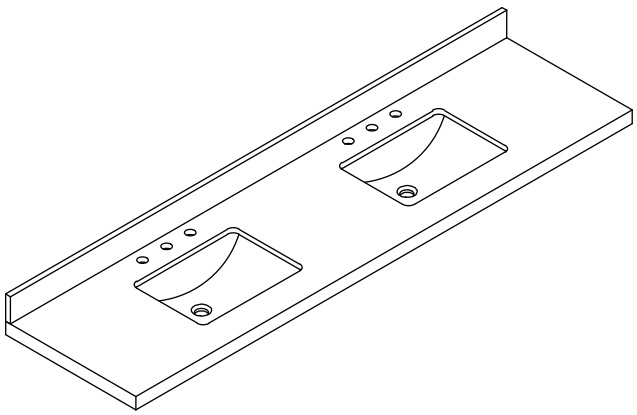

VANITY TOP FEATURES:

1.Material: Highly resilient, nonporous, scratch-and stain-resistant quartz.
2.Top Color: Calacatta quartz
3.Sink: 2*20”undermount rectangle sinks
4.Faucet Holes: Top pre-drilled for 8”widespread faucet holes
5.Sink Certified: CUPC certified
6.Backsplash: 4”backsplash included
7.Faucet Included: No
8.Nominal Dimension(W*D*H): 84W*22D*2H inches

All dimensions and specifications are nominal and may vary.Use actual products for accuracy in critical situations.

Vanity Installation

SUGGESTED TOOLS AND MATERIALS:

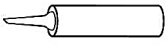
Sealant

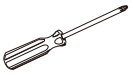
Phillips Screwdriver


Safety glasses


Rag


Level

INSTALLATION INSTRUCTLONS

We recommend consulting a professional if you are unfamiliar with installing bathroom fixtures and plumbing .We accept no liability for any damage to the floor,plumbing,vanity cabinet,sink,counter top,or personal injury during installation.

STEP-BY-STEP ASSEMBLY:

STEP 1: Unboxing & Countertop Removal

Open the outer carton and remove the packaging materials. With a two-man crew, carefully lift the artificial stone countertop off the vanity cabinet.

⚠ CRITICAL WARNING FOR HANDLING & STORAGE:

- **ALWAYS carry the countertop vertically (on its edge), NEVER horizontally flat!** Transporting it flat creates severe center-bending stress and will cause the stone to crackor snap under its own weight.
- **ALWAYS** lift from the solid outer ends. Never grab or apply pressure near the pre-cut sink hole or faucet holes, as these are the weakest points.
- **HOW TO STORE IT SAFELY:** Place the countertop vertically (on its long edge) on a soft surface (like a thick rug or foam pad) against a flat wall.
- **NEVER** lay it flat on the ground, and **NEVER** lean it against a bumpy or uneven surface, otherwise it will bend and crack. Ensure it is leaning at a safe angle so it cannot tip over.


Incorrect

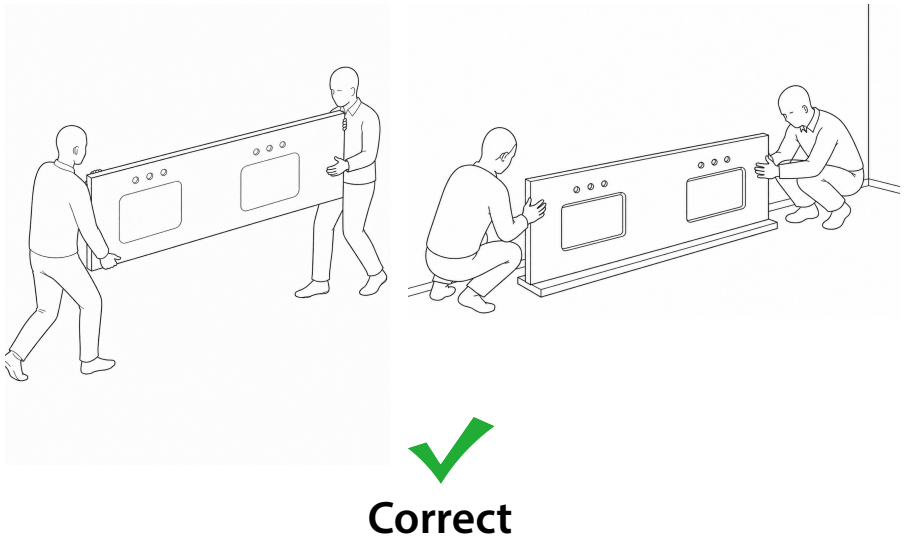
Correct

Note:sink style,shape,countertop,vanity may vary from the picture above. Instructional purpose only

Vanity Installation

STEP 2: Retrieving Legs from the Drawer

Open the cabinet drawers and locate the small internal accessory box. Remove the metal legs and the matching set of hardware screws . Keep them in a handy location for assembly.

ATTENTION: Count all screws and parts before proceeding. Keep children away from small hardware parts to avoid choking hazards.

- The accessory box may be packed in any drawer (from the 1st to the 3rd drawer). If you do not see it at first, please check each drawer one by one.

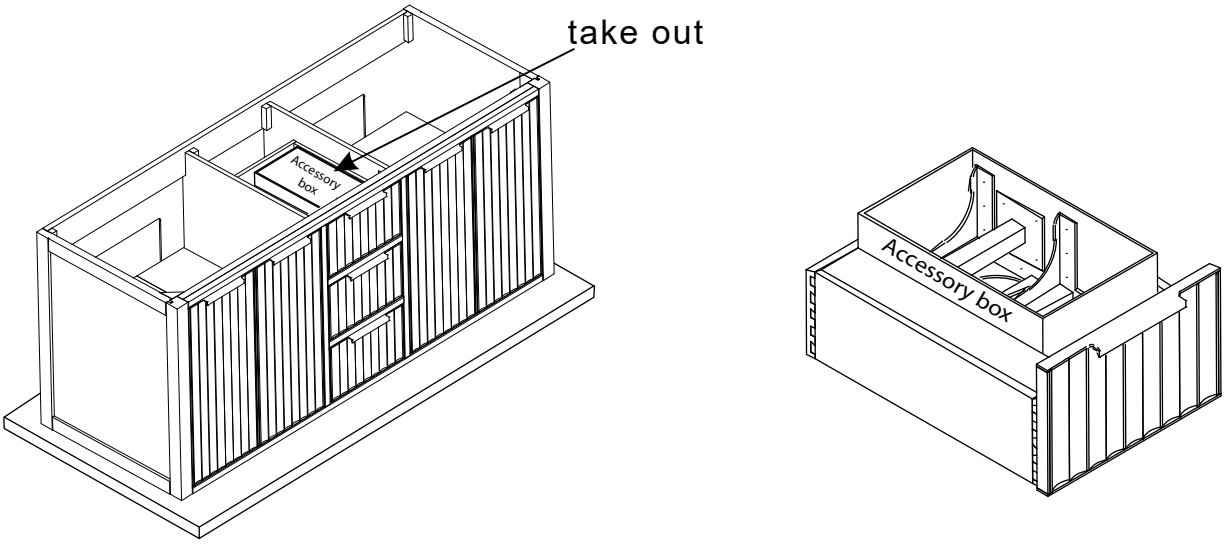

STEP 3: Preparing Floor Protection

Clear a sufficient working space on the floor near the installation area. Lay down a thick layer of protective foam sheets or cardboard flat on the floor.

ATTENTION: Ensure the floor is completely clear of debris (like small stones or stray staples) beneath the foam, which could puncture the protection and scratch the cabinet finish.

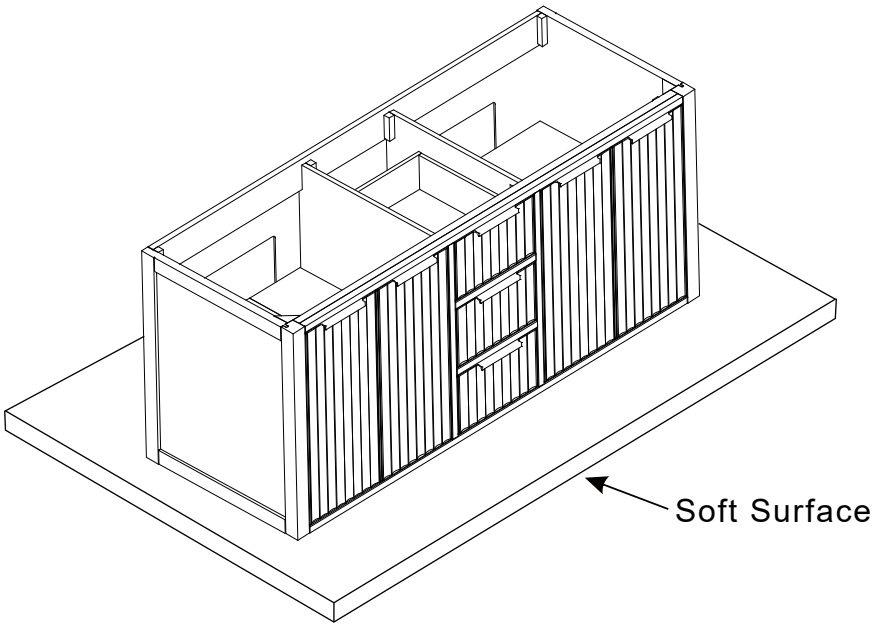

Note:sink style,shape,countertop,vanity may vary from the picture above. Instructional purpose only

Vanity Installation

STEP 4: Inverting the Cabinet Body

Using a two-man crew, lift and flip the cabinet body completely upside down, resting its top edges gently onto the protective foam/cardboard so the bottom is facing up.

IMPORTANT SAFETY NOTE: Ensure the drawer faces are directed **UPWARDS** during this flipping motion. Do not let the drawers tilt downward, or they will slide out automatically and suffer heavy damage.

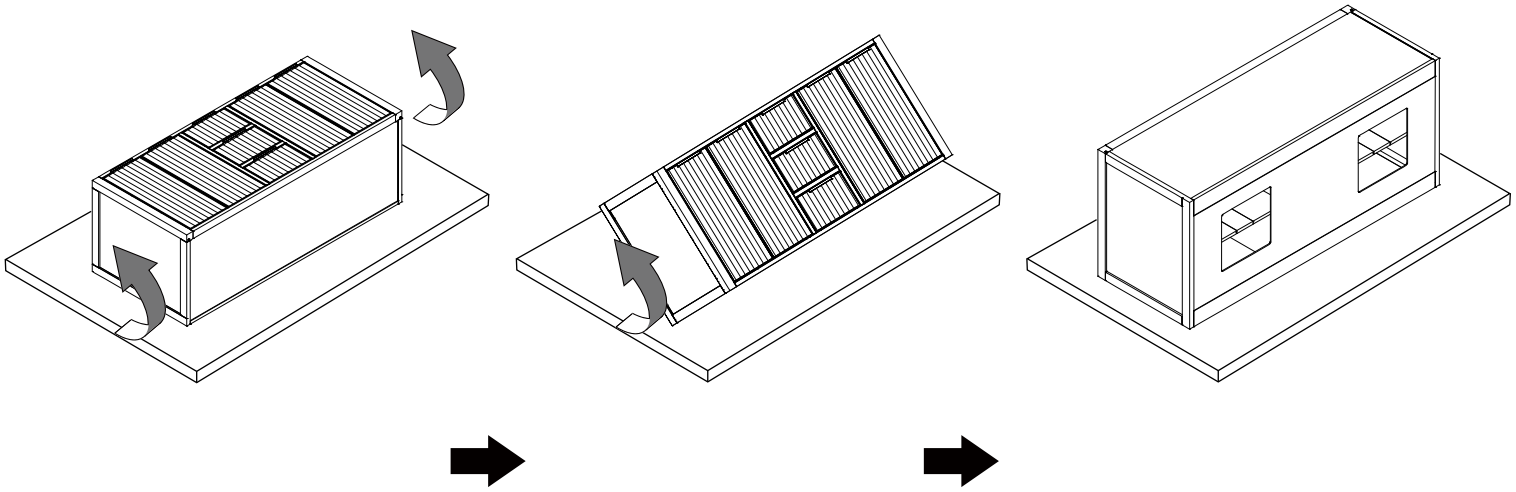

STEP 5: Mounting the Metal Legs

Align the metal legs with the pre-drilled holes at the bottom corners of the cabinet body. Use a Phillips screwdriver to securely fasten each leg using the provided screws (6 screws per leg).

ATTENTION: Hand-tighten all screws firmly using a manual screwdriver. Do not use a high-torque electric drill, as it may strip the pre-drilled holes in the wood body.

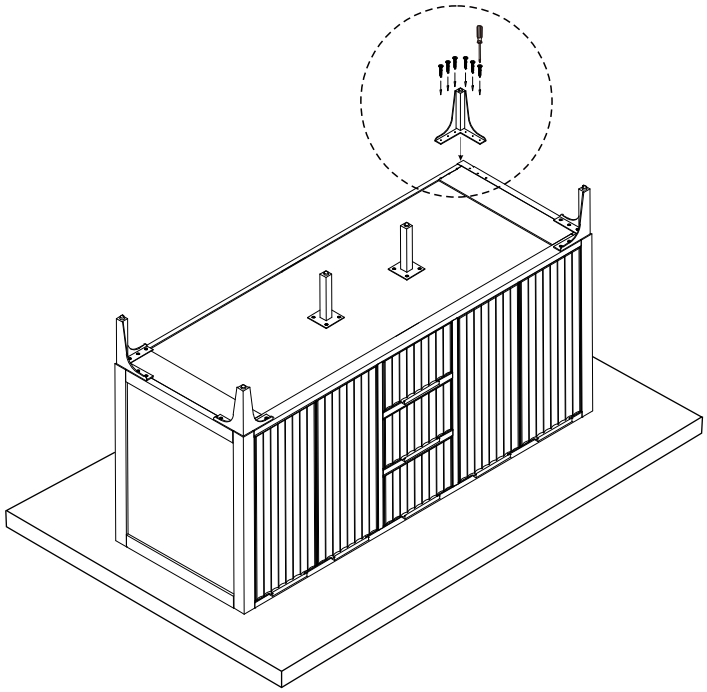

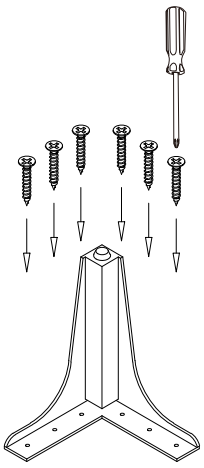

Note:sink style,shape,countertop,vanity may vary from the picture above. Instructional purpose only

Vanity Installation

STEP 6: Returning the Cabinet Upright

With two people, lift and rotate the cabinet body back over until it is upright, with the newly installed metal legs resting flat on the ground.

IMPORTANT SAFETY NOTE: Pay close attention to the drawers during this rotation. Do not allow them to slide out under gravity, which may cause product damage or personal injury.

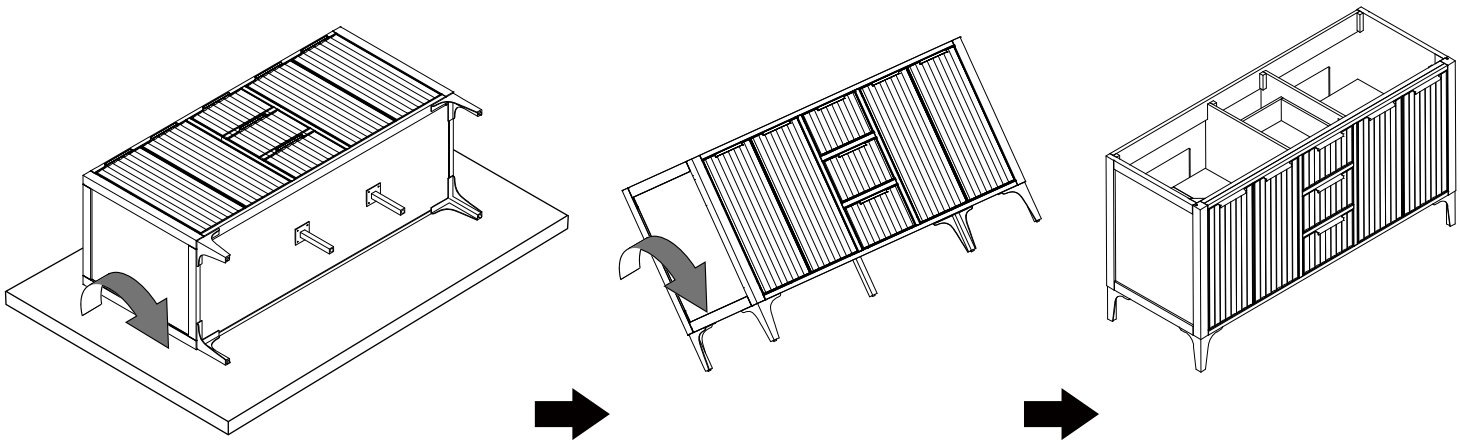

STEP 7: Applying Silicone Sealant

Move the vanity cabinet into its final position against the wall and ensure it is perfectly level.
Apply an even, wavy bead of quality silicone sealant along the top edges of the wooden cabinetbody.

ATTENTION: Double-check that the vanity is 100% level before applying glue. Adjusting the position after the silicone sets will be extremely difficult.

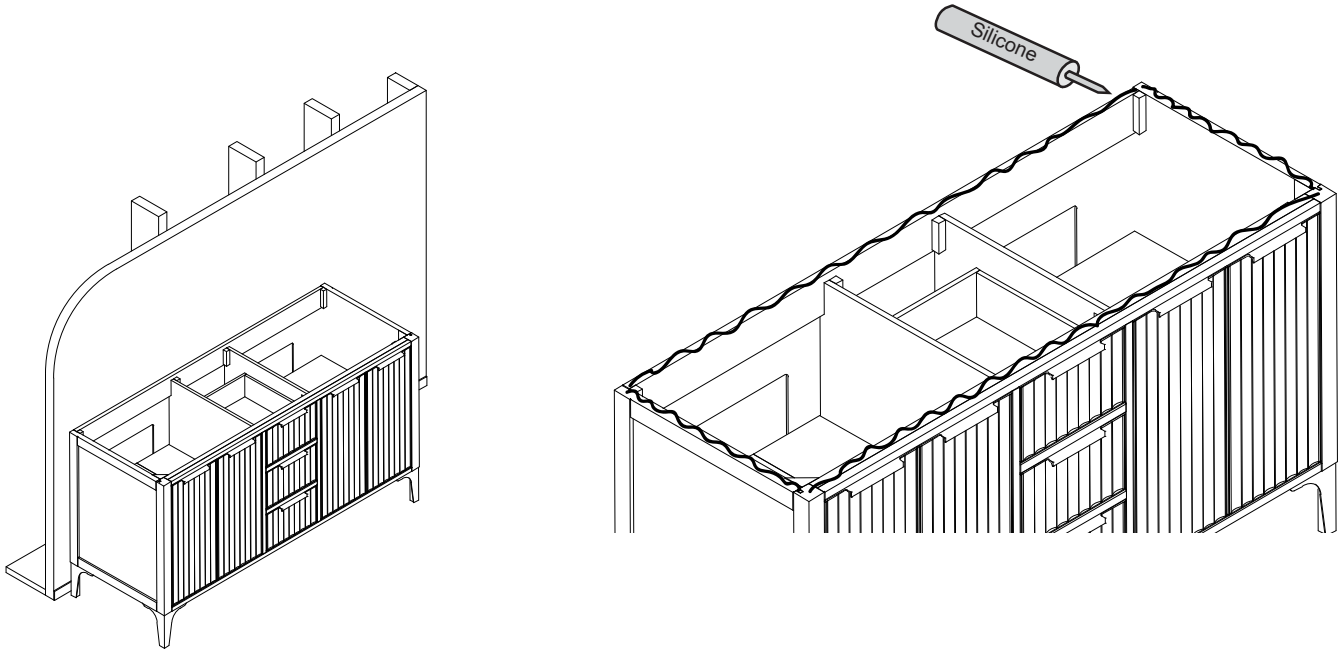

Note:sink style,shape,countertop,vanity may vary from the picture above. Instructional purpose only

Vanity Installation

STEP 8: Countertop & Backsplash Reset

With two people, carefully lift the artificial stone countertop vertically (on its edge), bring it over the cabinet, and lower it precisely onto the top edges, pressing down to seal. Finally, apply sealant to the bottom of the backsplash and place it against the wall.

CRITICAL WARNING: > * Keep the countertop vertical until the final moment it is placed onto the cabinet.

- Align the edges precisely on the first try. Wipe away any excess silicone immediately with a damp rag before it dries.

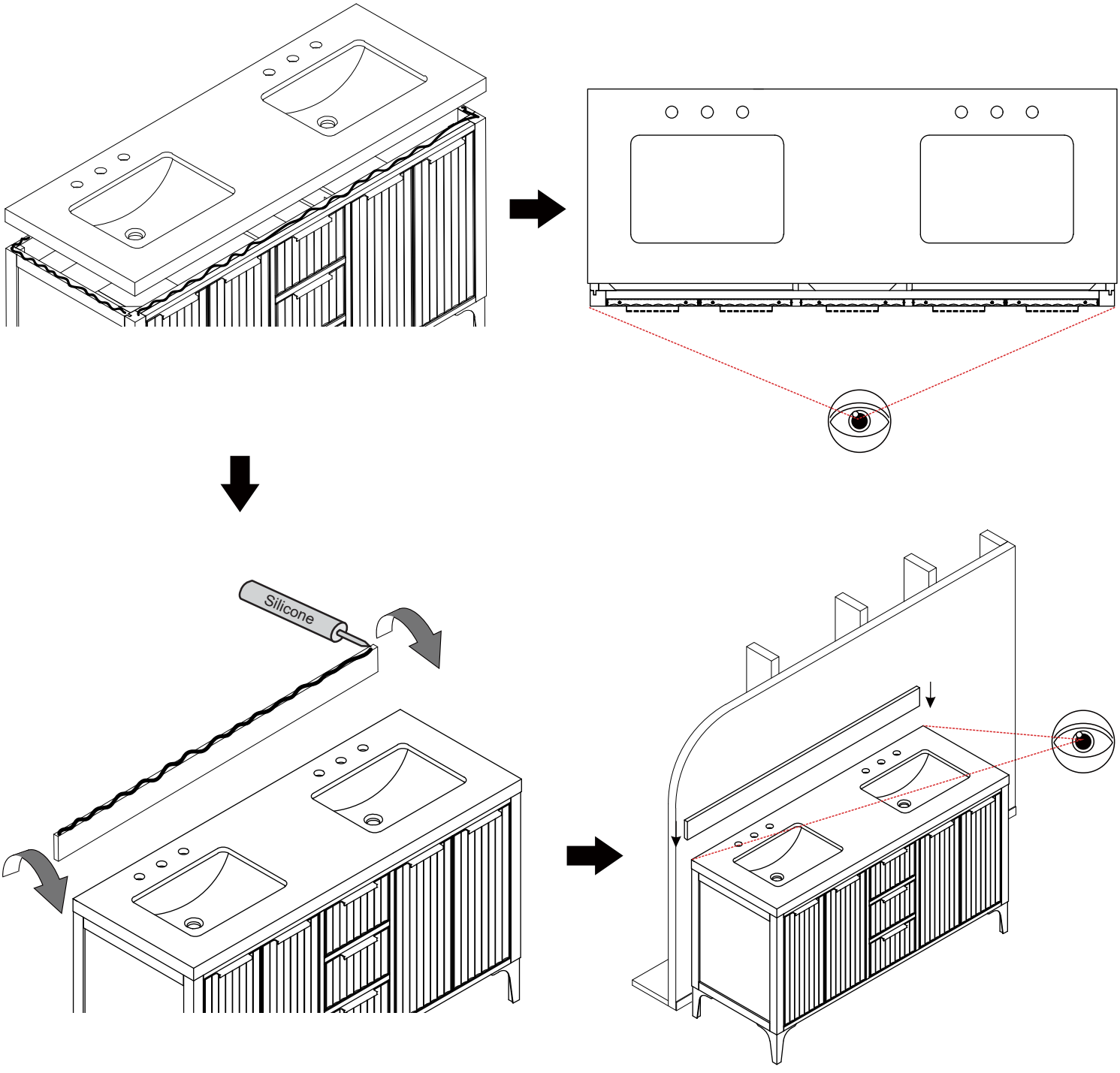

Note:sink style,shape,countertop,vanity may vary from the picture above. Instructional purpose only

OAKMET84ATQZ

BATHROOM VANITY SET
SKU: OAKMET84ATQZ

PRODUCT DIAGRAMS:

Front

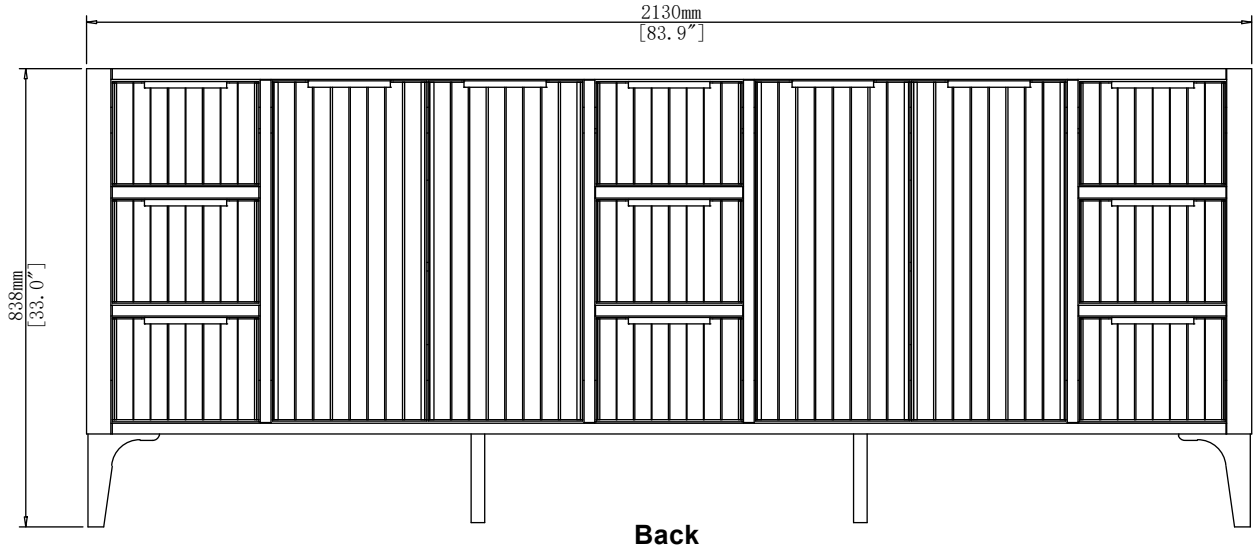

Back

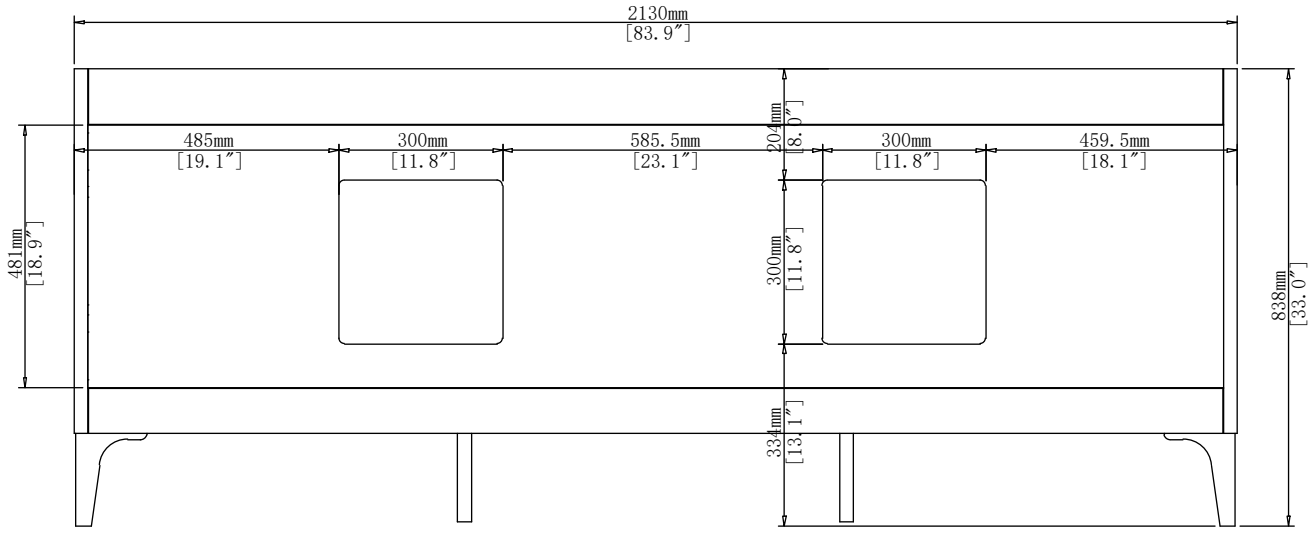

Top

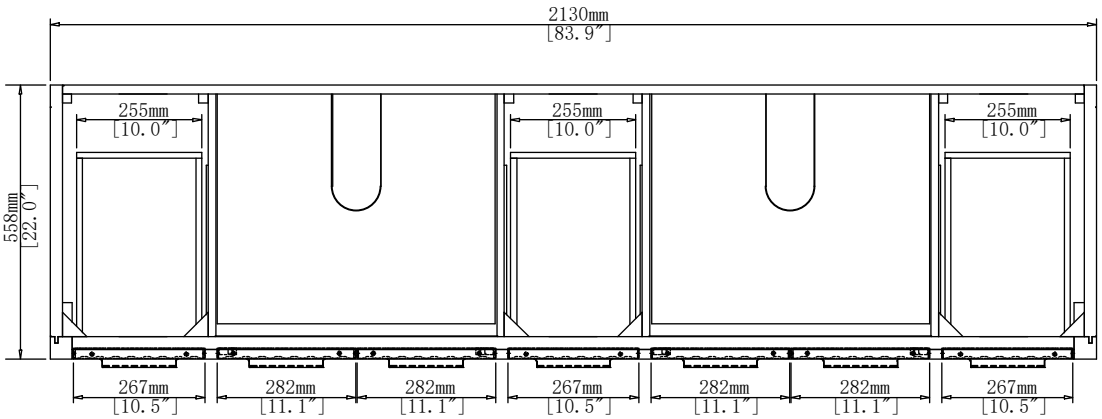

Side

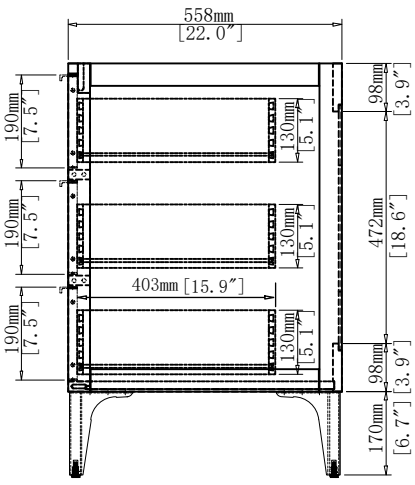

All dimensions and specifications are nominal and may vary.Use actual products for accuracy in critical situations.

OAKMET84ATQZ

VANITY TOP

With rectangular undermount sink

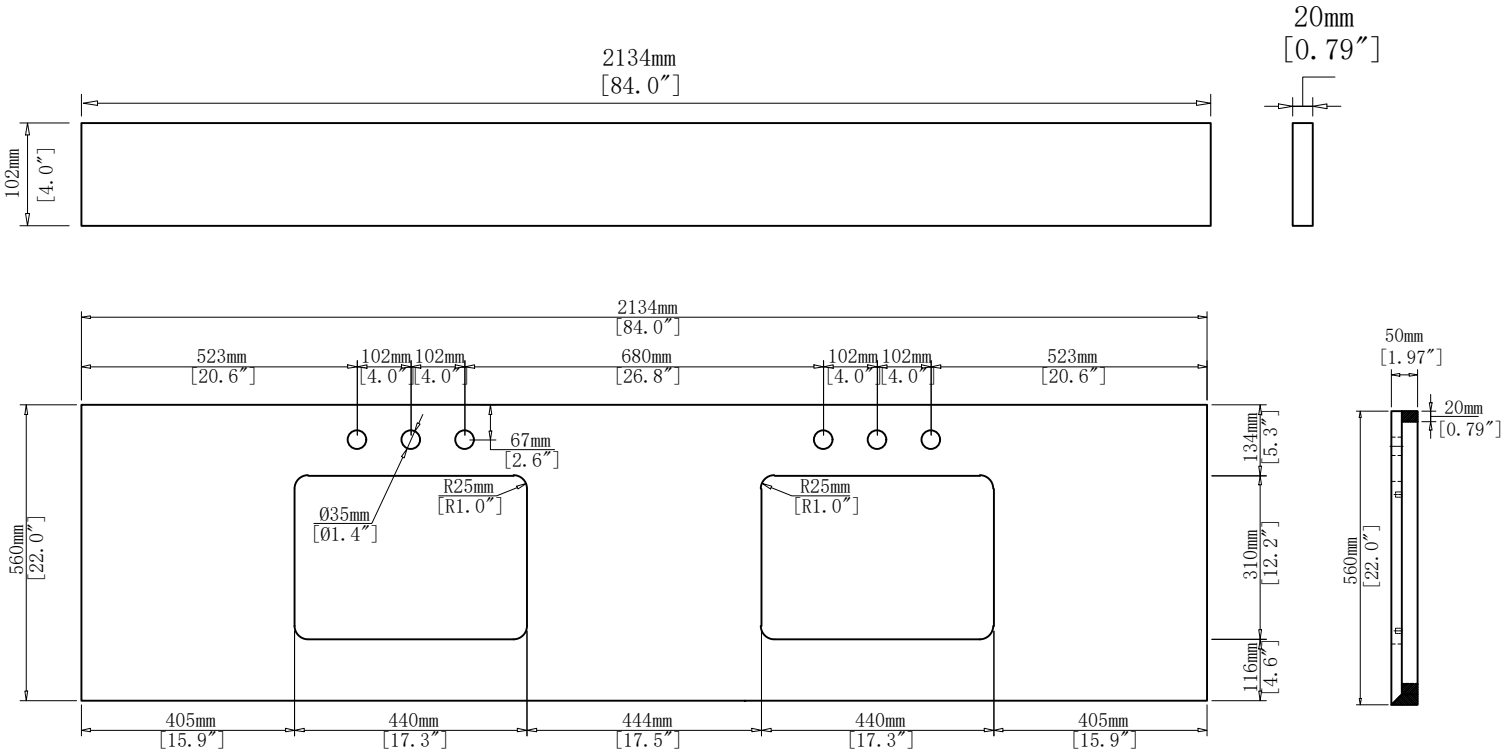

Undermount Sink

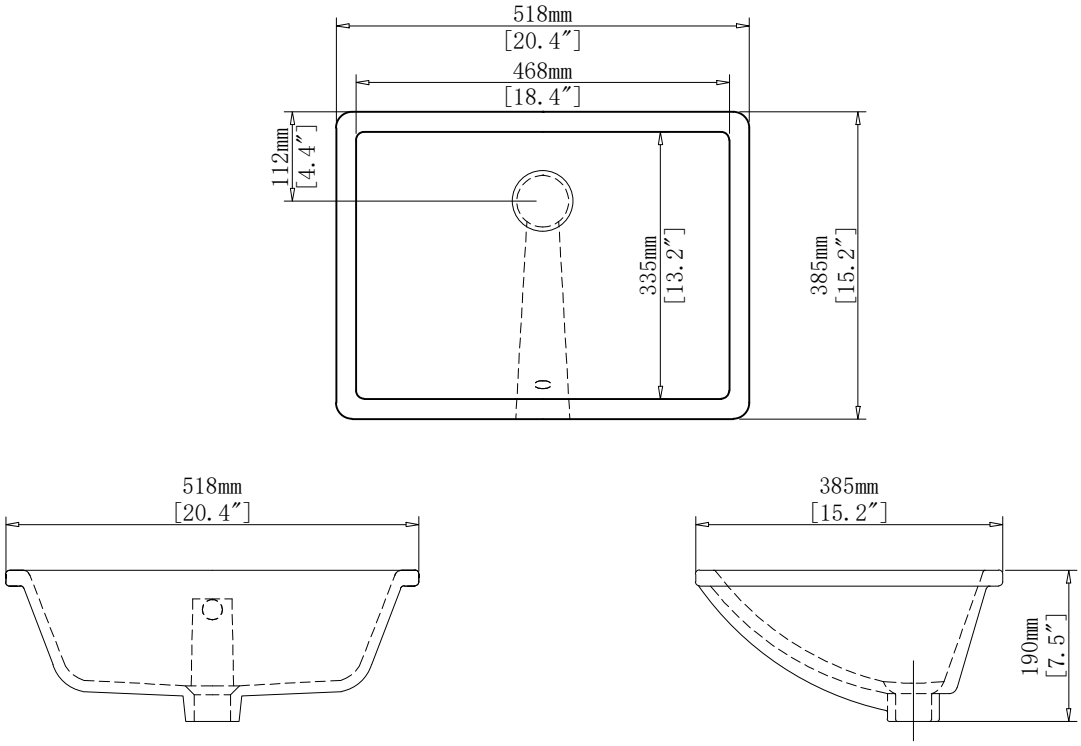

All dimensions and specifications are nominal and may vary.Use actual products for accuracy in critical situations.