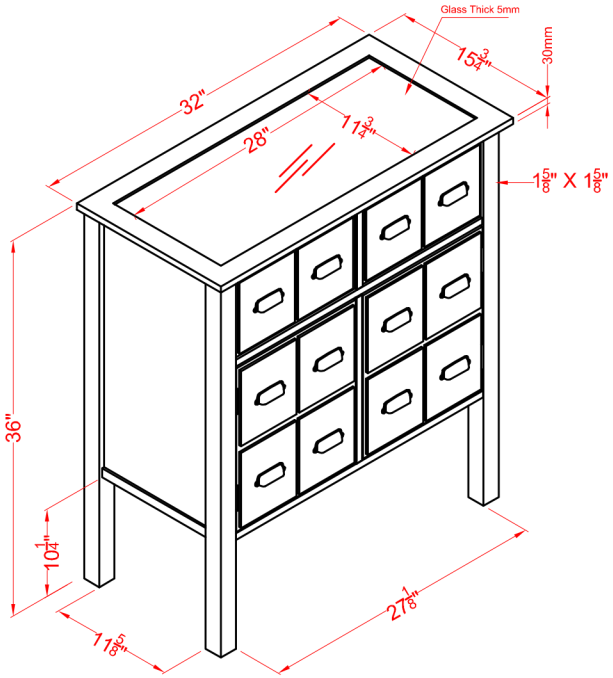
Glass Thick 5mm
30mm
32"
28"
15 3/4"
11 3/4"
1 5/8" X 1 5/8"
36"
10 1/4"
11 5/8"
27 1/8"

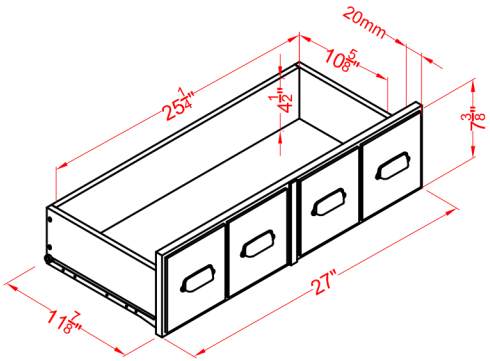
20mm
10 5/8"
25 1/4"
4 1/2"
7 3/8"
27"
11 7/8"

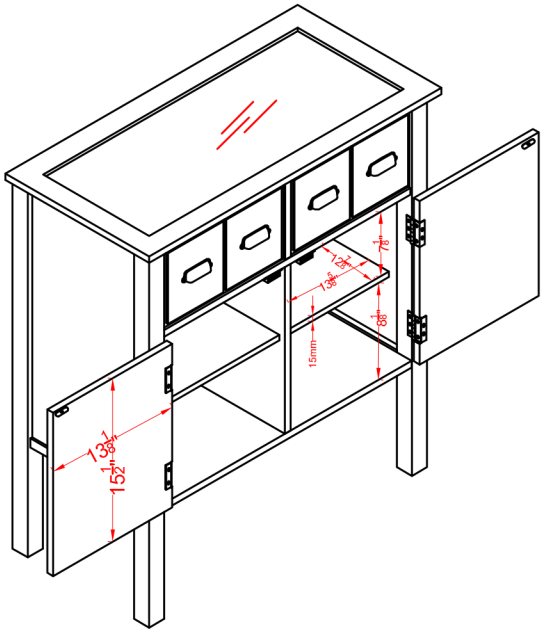
15mm
13 1/8"
15 1/2"