ASSEMBLY INSTRUCTIONS

(WOODEN SEAT)

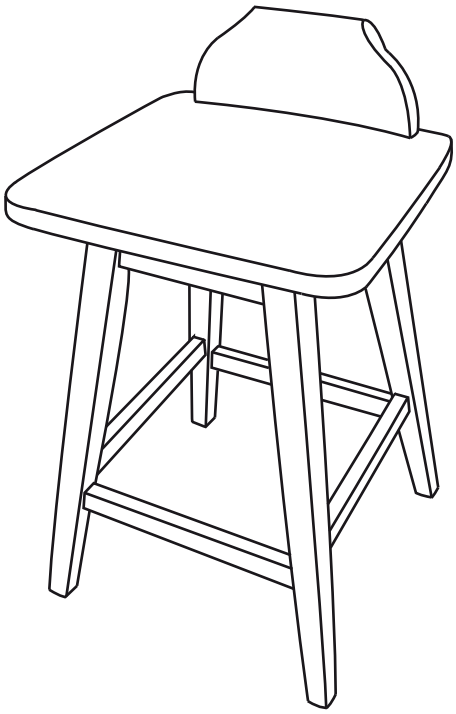

NOTE TO CUSTOMERS:

- For ease and speed of assembly we recommend that before you commence each step of the assembly that you identify all the parts required to complete that step.
- We recommend that where possible you allow sufficient space to assemble the item as close as possible to the place where it will be once assembled.
- For the protection of your furniture we recommend that the product is placed on protected surfaces during assembly to prevent any damage.
- During assembly do not over tighten the screws or bolts, as this may damage the product.
- Please ensure you retain all the product packaging until the item is completely assembled.
- Periodically check all fitting and re-tighten as necessary.
- Never allow any liquids to remain on your furniture as absorption can cause the wood to warp or finish to de-laminate.
- It is recommended that this item should be assembled by two adults.

Chair Assembly Tips

The key to correct chair assembly is to loosely attach all of the bolts, then gradually tighten them in succession until all of them are secure. Completely tightening one or more bolts prematurely can result in the following:

ISSUE: CHAIR IS UNLEVELED

Cause:

- Chairs can be wobbly or unleveled if one or more bolts are fully tightened before all bolts are attached and / or tighten.

- Chairs can be wobbly or unleveled if assembly is completed in a different room or surface than where the product is intended to primarily reside.

Solution:

- Loosen each bolt in the seat box (front legs, back corner-blocks, and back apron) until they are adjustable by hand. Place the chair upright on the floor. Press firmly and evenly on the seat edges until the product sits level but do not lean against the chair back. Once the chair sits level on the desired surface, fully tighten each bolt.

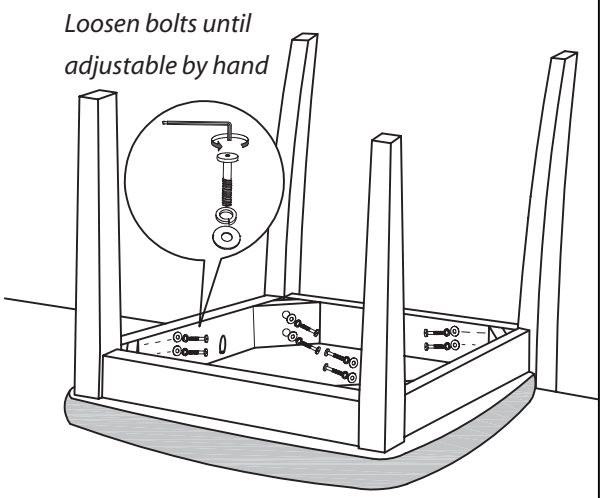

- When assembling your chair, make sure to do it in the location that the chair will most often be used. Uneven flooring frequently accounts for wobbling issues.

ISSUE: HOLES ARE MISALIGNED

Cause:

- This issue can occur when some bolts are tightened fully before all other bolts are tightened or attached.

Solution:

- Loosen each bolt in the seat box (front legs, back corner-blocks, and back apron) until finger tight. This will allow you to realign the holes and properly fasten the bolts to the frame.

PARTS IDENTIFICATION

A-	Chair Back	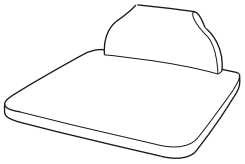	1 pc
B-	Seat Box	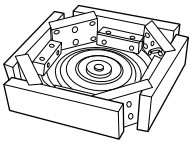	1 pc
C-	Right Leg	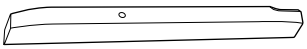	2 pcs
D-	Left Leg		2 pcs
E-	Front Stretcher		2 pcs
F-	Side Stretcher		2 pcs

HARDWARE IDENTIFICATION

1-	Pan Head Screw 8x1.1/4”	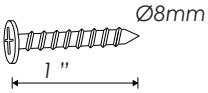	8 pcs
2-	JCBC Bolt M6 x 25mm	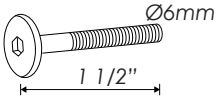	4 pcs
3-	JCBC Bolt M6 x 70mm	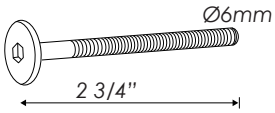	8 pcs
4-	Spring Washer M6 x 13mm	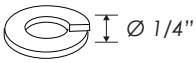	12 pcs
5-	Flat Washer M6 x 16.5mm	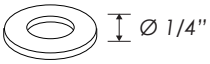	12 pcs
6-	Allen Key M4 x 2 1/2”		1 pc
7-	Glue	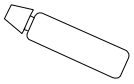	1 pc

NOTE: Quantities shown are for one chair. Bolts are metric screw threads

STEP 1

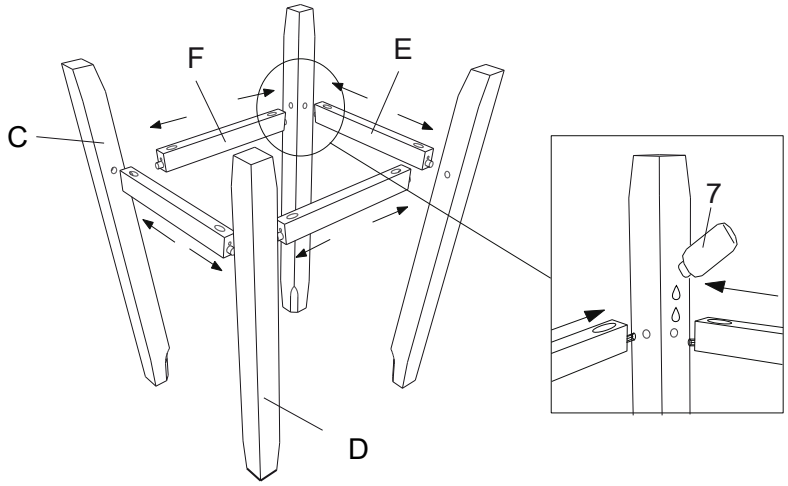

STEP 2

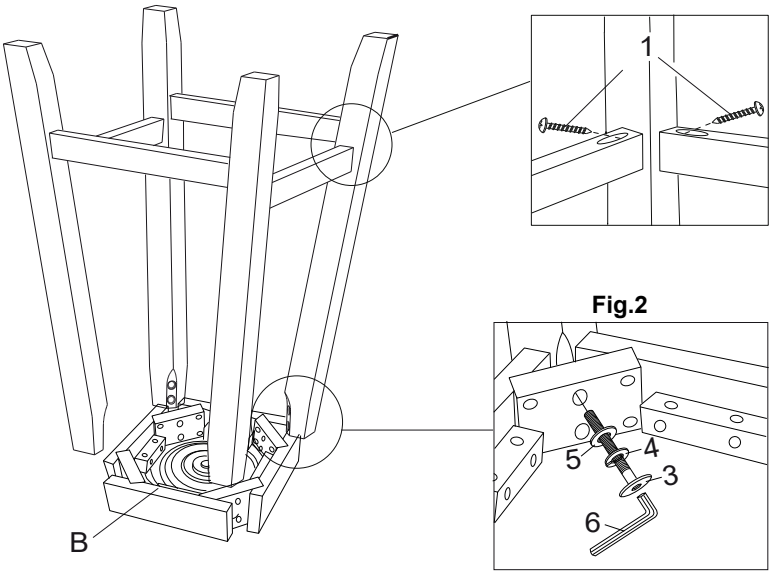
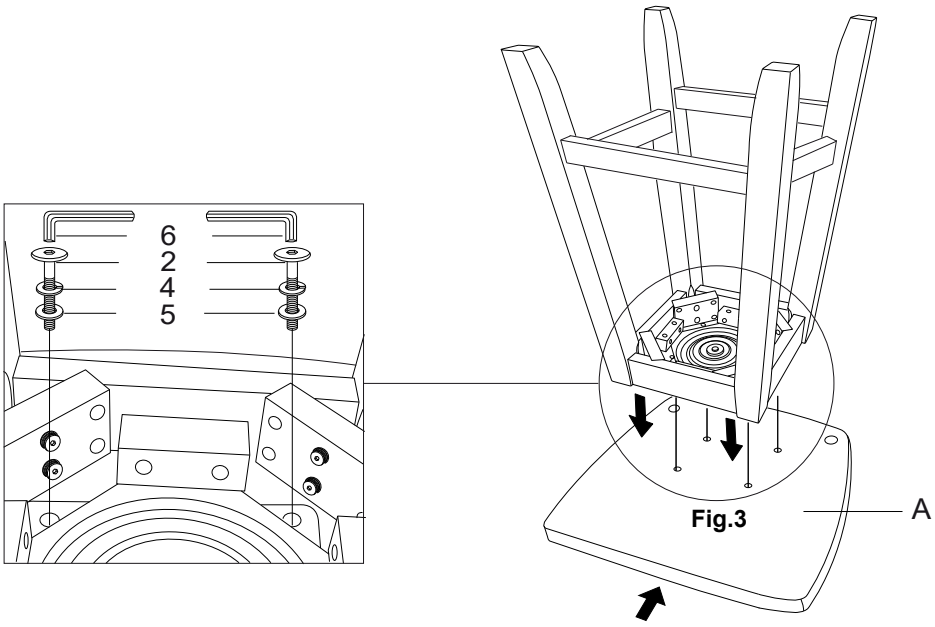
STEP 3