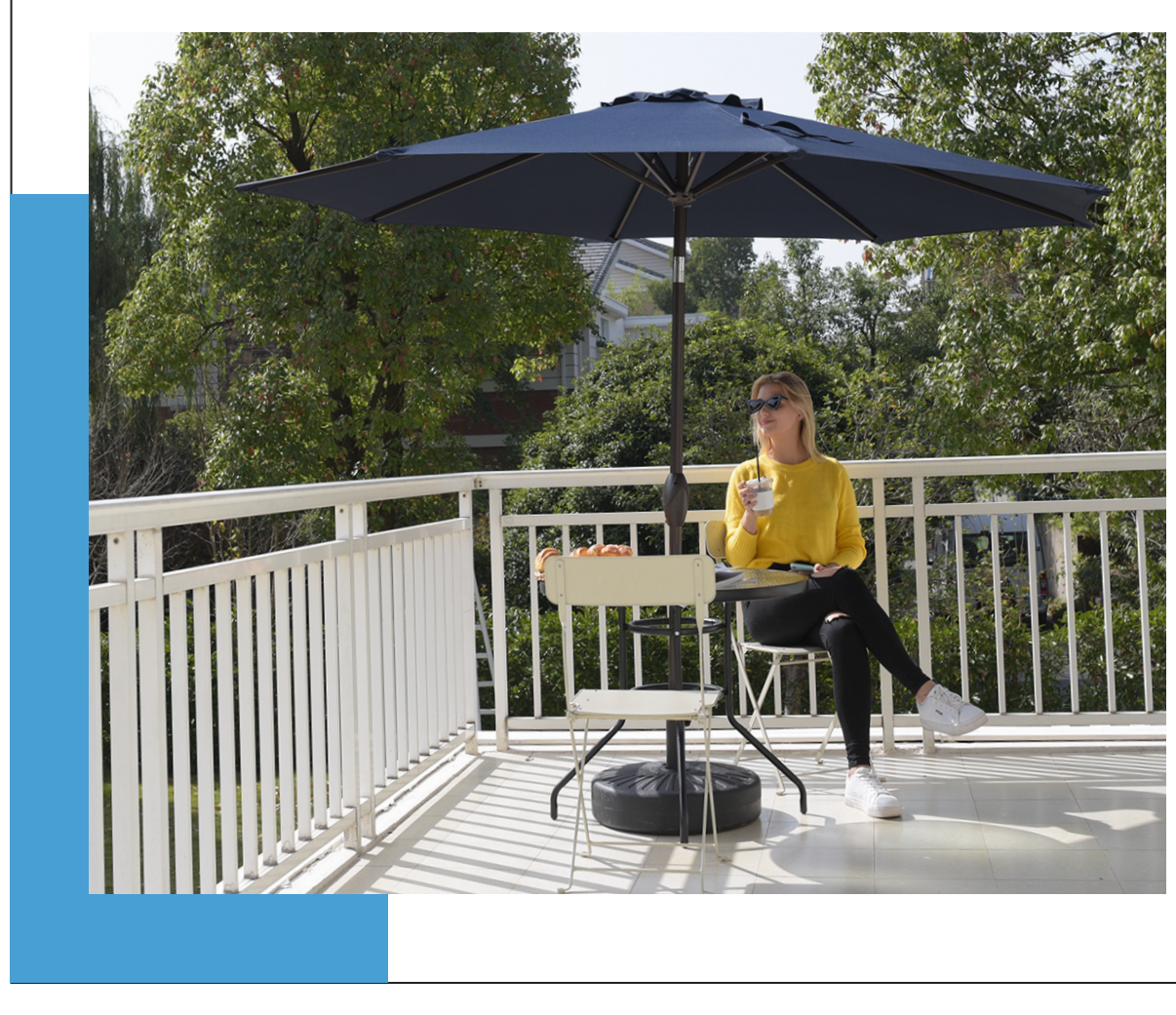

NEW UMBRELLA

ABOUT US

Our company specializes in the production of patio umbrella, which is popular among users because of its fashionable and convenient features. Patio umbrella is made of high-quality fabric polyester, waterproof and UV protection. Increase in thickness of ribs' wall,the structure is more stable and wind-resistant, double reinforced packing. It not only keeps up with the trend, but also is practical and convenient, which is ideal for yard , garden, deck backyard, pool residential and commercial locations.

We will provide replacement services and accessories services, so that you have after-sales protection.

10FT PATIO UMBRELLA

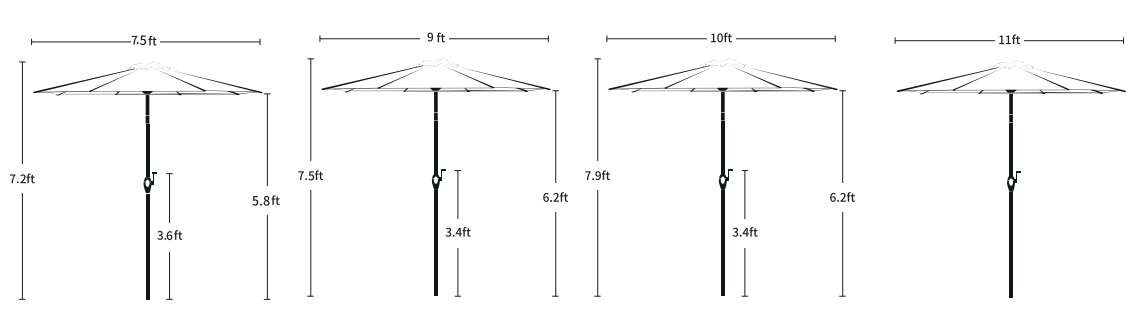
7.5ft
7.2ft
3.6ft
5.8ft
9 ft
7.5ft
3.4ft
6.2ft
10ft
7.9ft
3.4ft
6.2ft
11ft

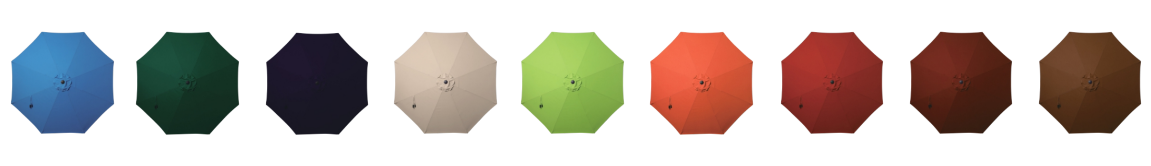

10FT PATIO UMBRELLA

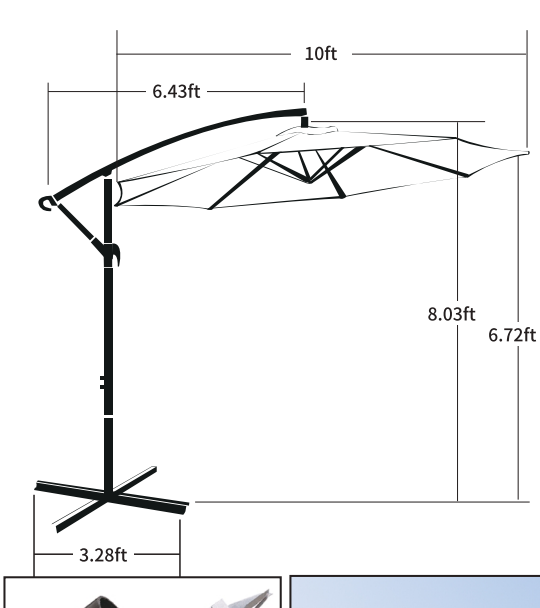
10ft
6.43ft
8.03ft
6.72ft
3.28ft

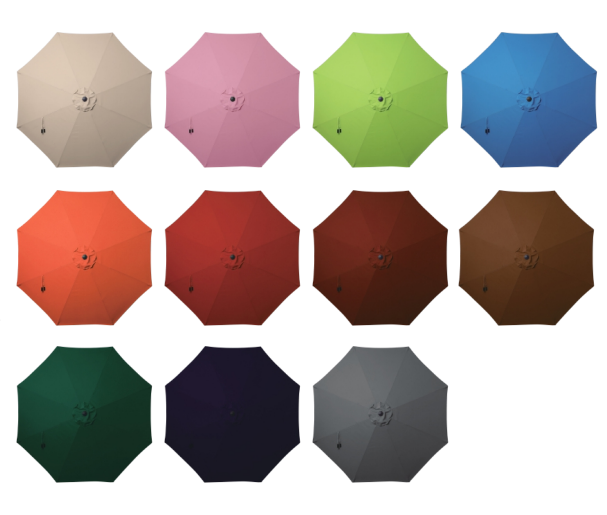

ASSEMBLY STEPS

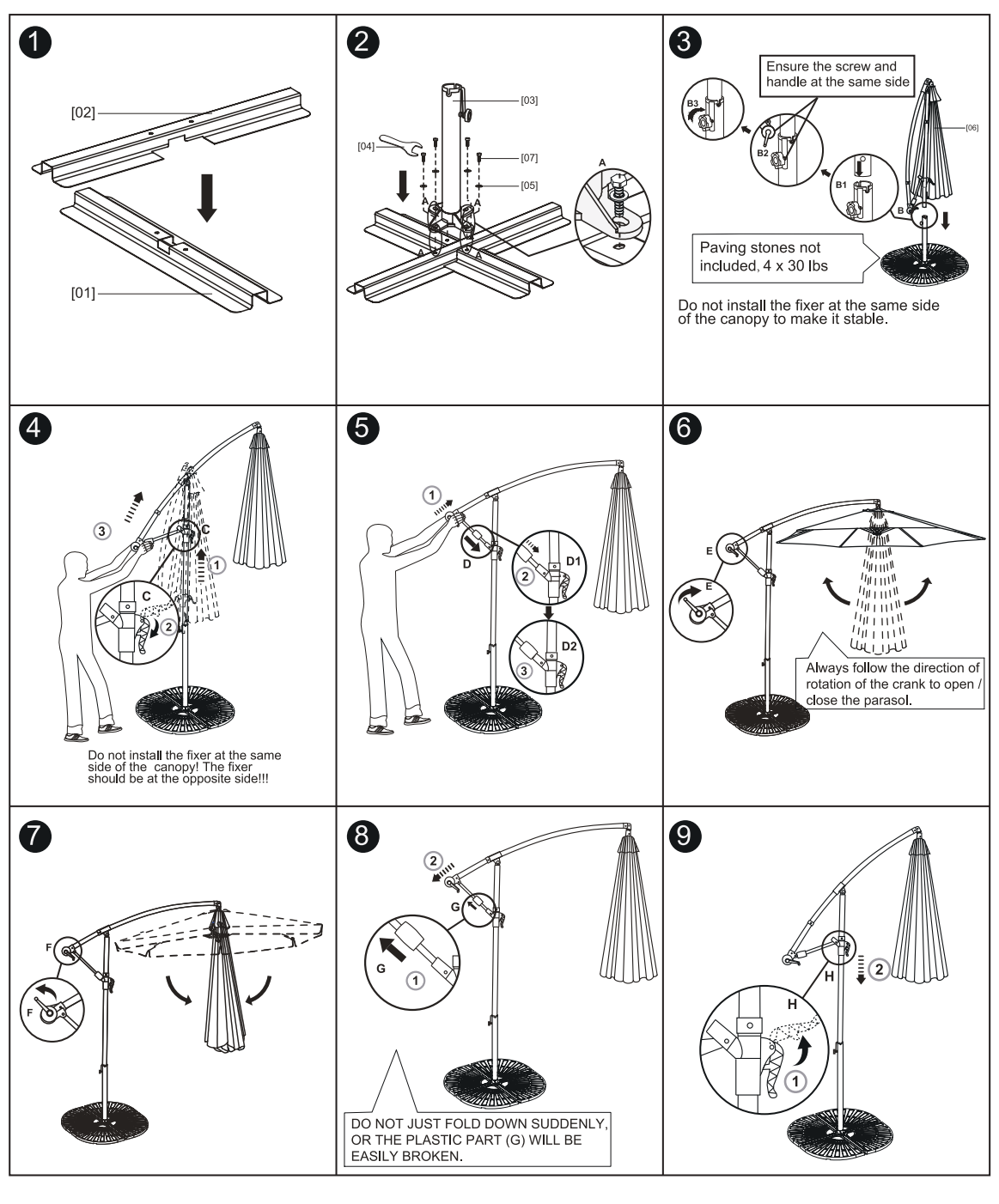
[02]
[01]
[03]
[04]
[07]
[05]
Ensure the screw and handle at the same side

3. Paving stones not included. 4 x 30 lbs

Do not install the fixer at the same side of the canopy to make it stable.

4. Do not install the fixer at the same side of the canopy! The fixer should be at the opposite side!!!

6. Always follow the direction of rotation of the crank to open / close the parasol.

8. DO NOT JUST FOLD DOWN SUDDENLY, OR THE PLASTIC PART (G) WILL BE EASILY BROKEN.

11 FT PATIO UMBRELLA

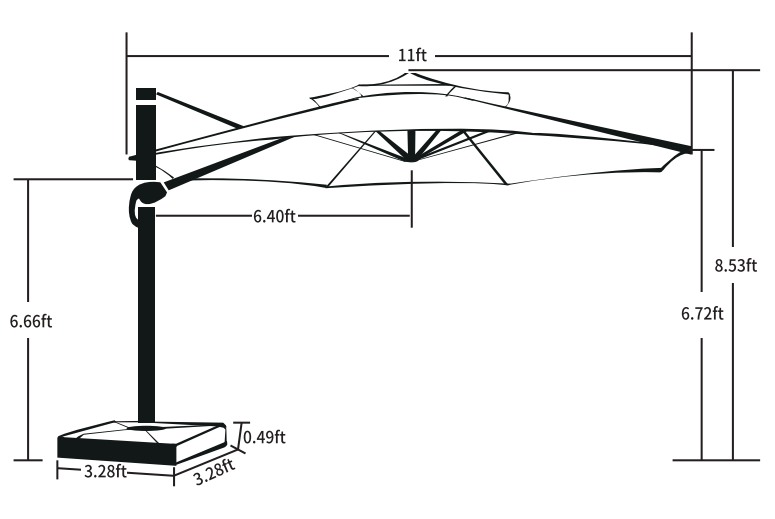
11ft
6.40ft
6.66ft
8.53ft
6.72ft
0.49ft
3.28ft
3.28ft

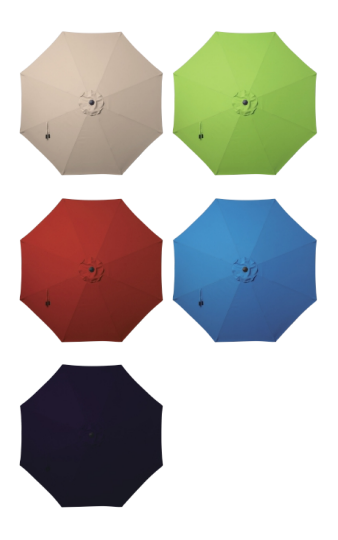

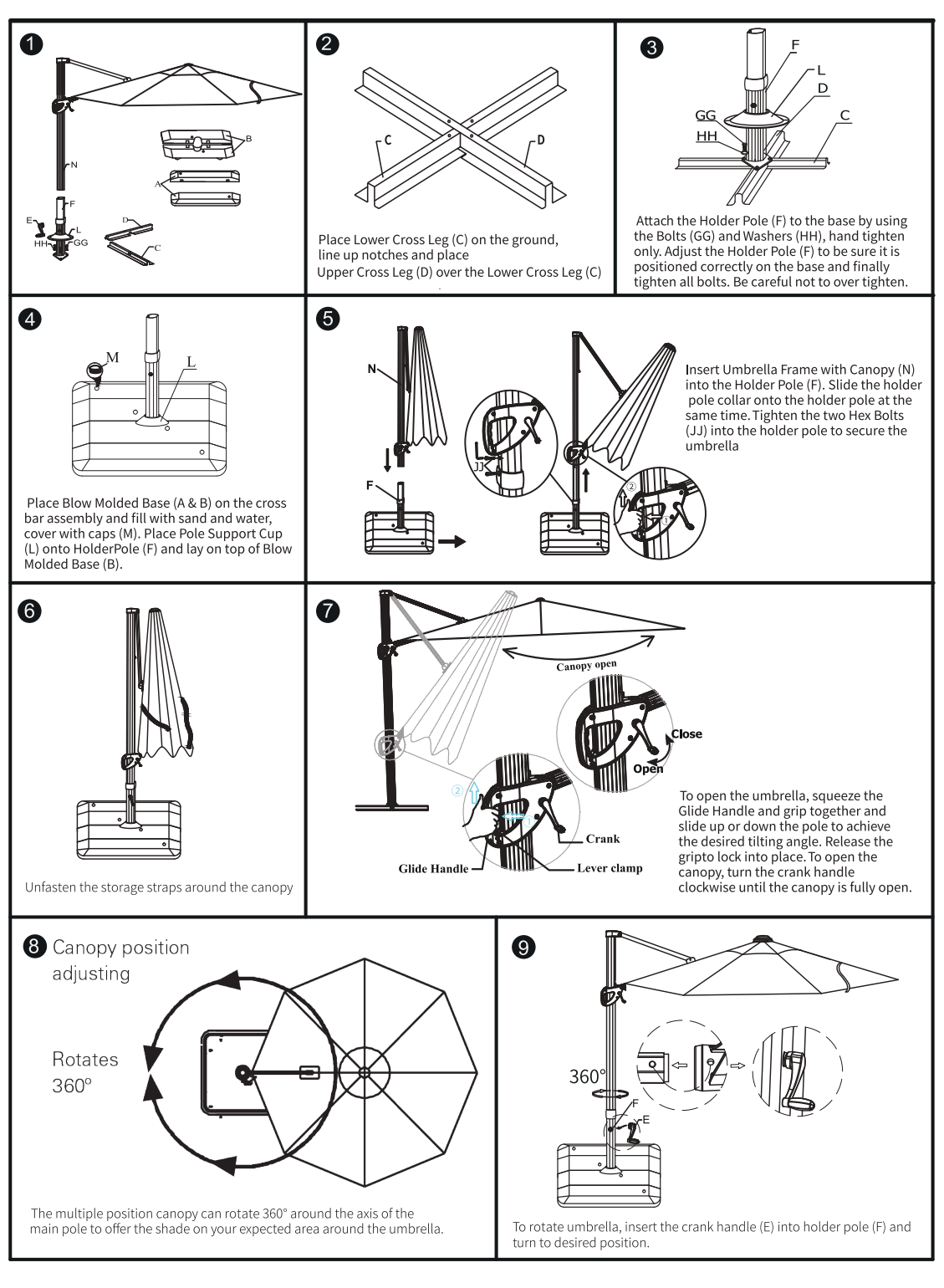
Canopy open
Close
Open
Crank
Glide Handle
Lever clamp
360°

2. Place Lower Cross Leg (C) on the ground, line up notches and place Upper Cross Leg (D) over the Lower Cross Leg (C)

3. Attach the Holder Pole (F) to the base by using the Bolts (GG) and Washers (HH), hand tighten only. Adjust the Holder Pole (F) to be sure it is positioned correctly on the base and finally tighten all bolts. Be careful not to over tighten.

4. Place Blow Molded Base (A & B) on the cross bar assembly and fill with sand and water, cover with caps (M). Place Pole Support Cup (L) onto HolderPole (F) and lay on top of Blow Molded Base (B).

5. Insert Umbrella Frame with Canopy (N) into the Holder Pole (F). Slide the holder pole collar onto the holder pole at the same time. Tighten the two Hex Bolts (JJ) into the holder pole to secure the umbrella

6. Unfasten the storage straps around the canopy

7. To open the umbrella, squeeze the Glide Handle and grip together and slide up or down the pole to achieve the desired tilting angle. Release the gripto lock into place. To open the canopy, turn the crank handle clockwise until the canopy is fully open.

8. Canopy position adjusting

Rotates 360°

The multiple position canopy can rotate 360° around the axis of the main pole to offer the shade on your expected area around the umbrella.

9. To rotate umbrella, insert the crank handle (E) into holder pole (F) and turn to desired position.

10FT PATIO UMBRELLA

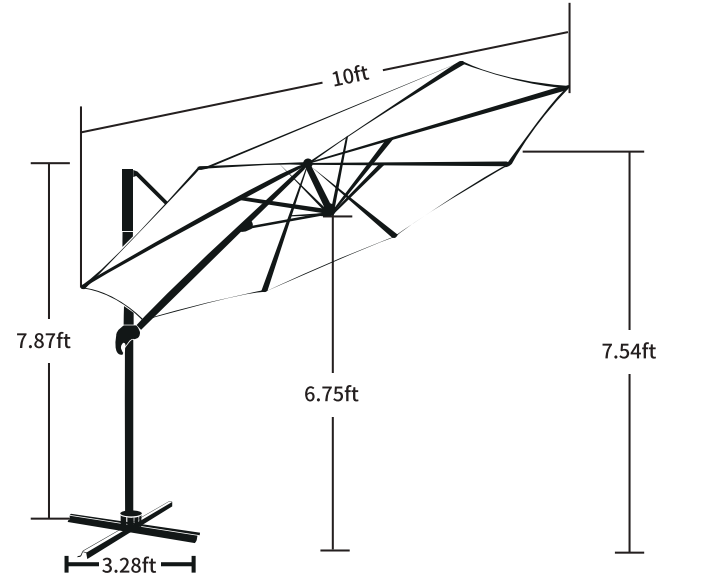
10ft
7.87ft
6.75ft
7.54ft
3.28ft

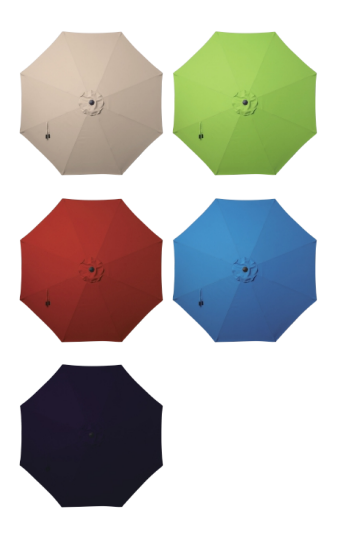

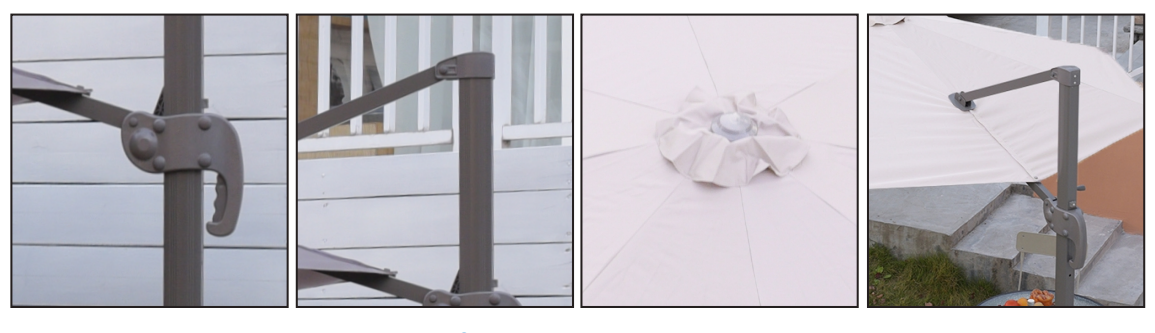

ASSEMBLY STEPS

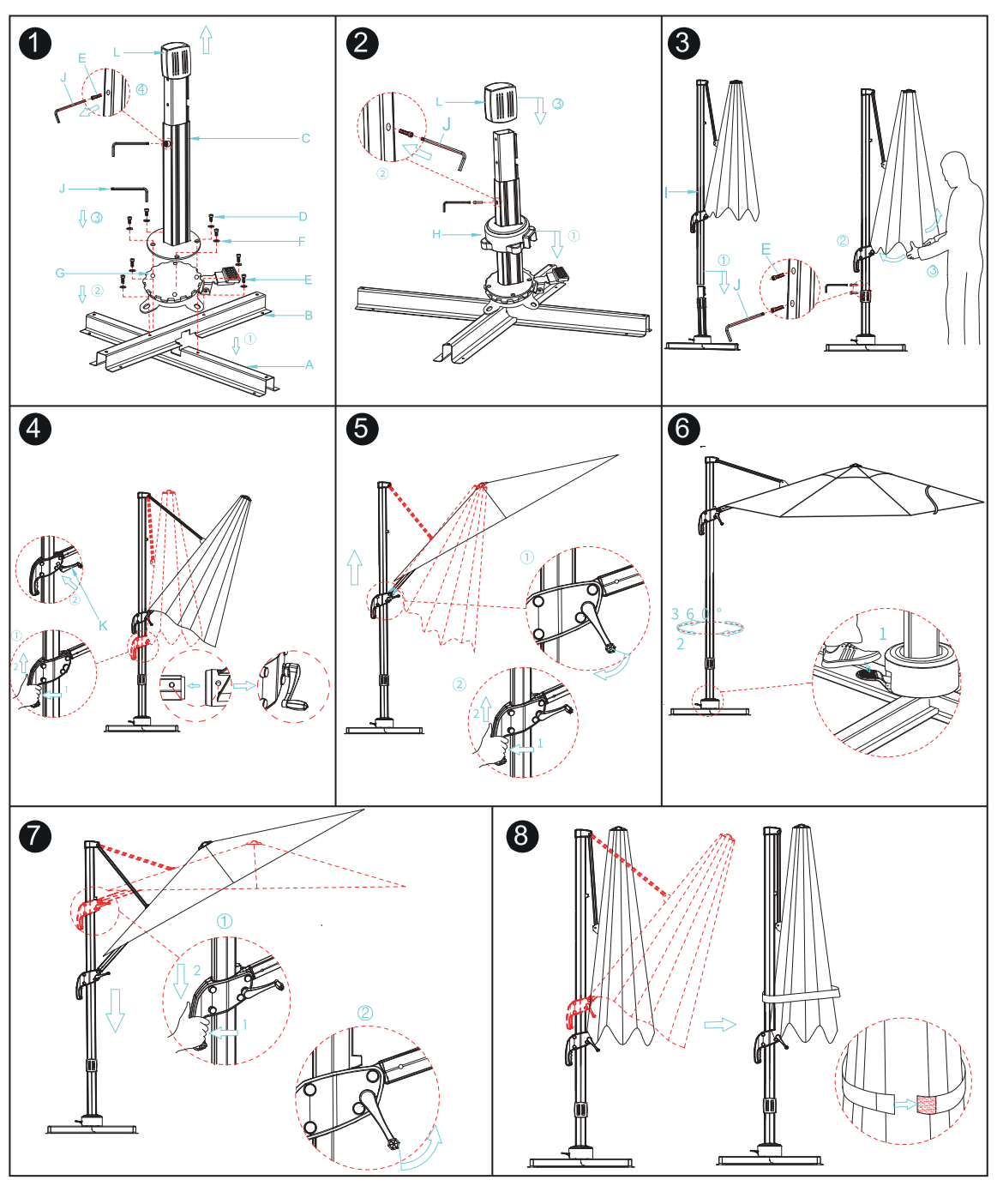

10FT PATIO UMBRELLA

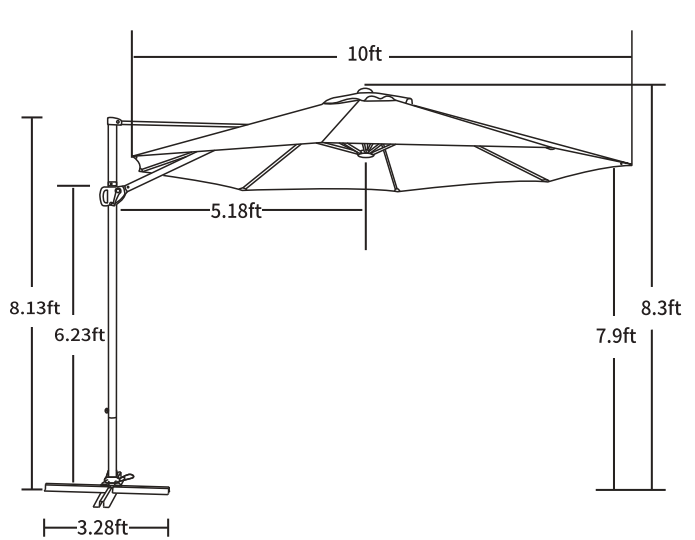
10ft
5.18ft
8.13ft
6.23ft
8.3ft
7.9ft
3.28ft

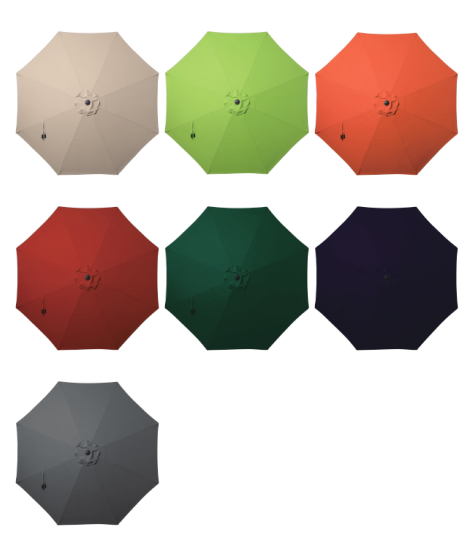

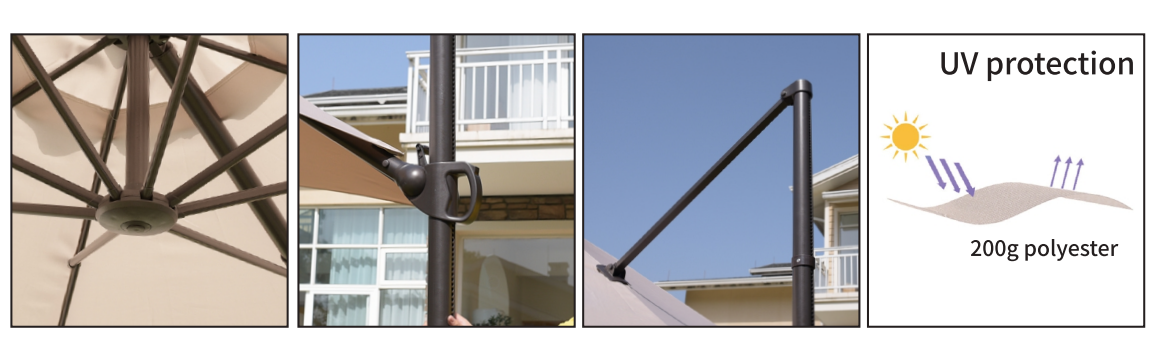
UV protection
200g polyester

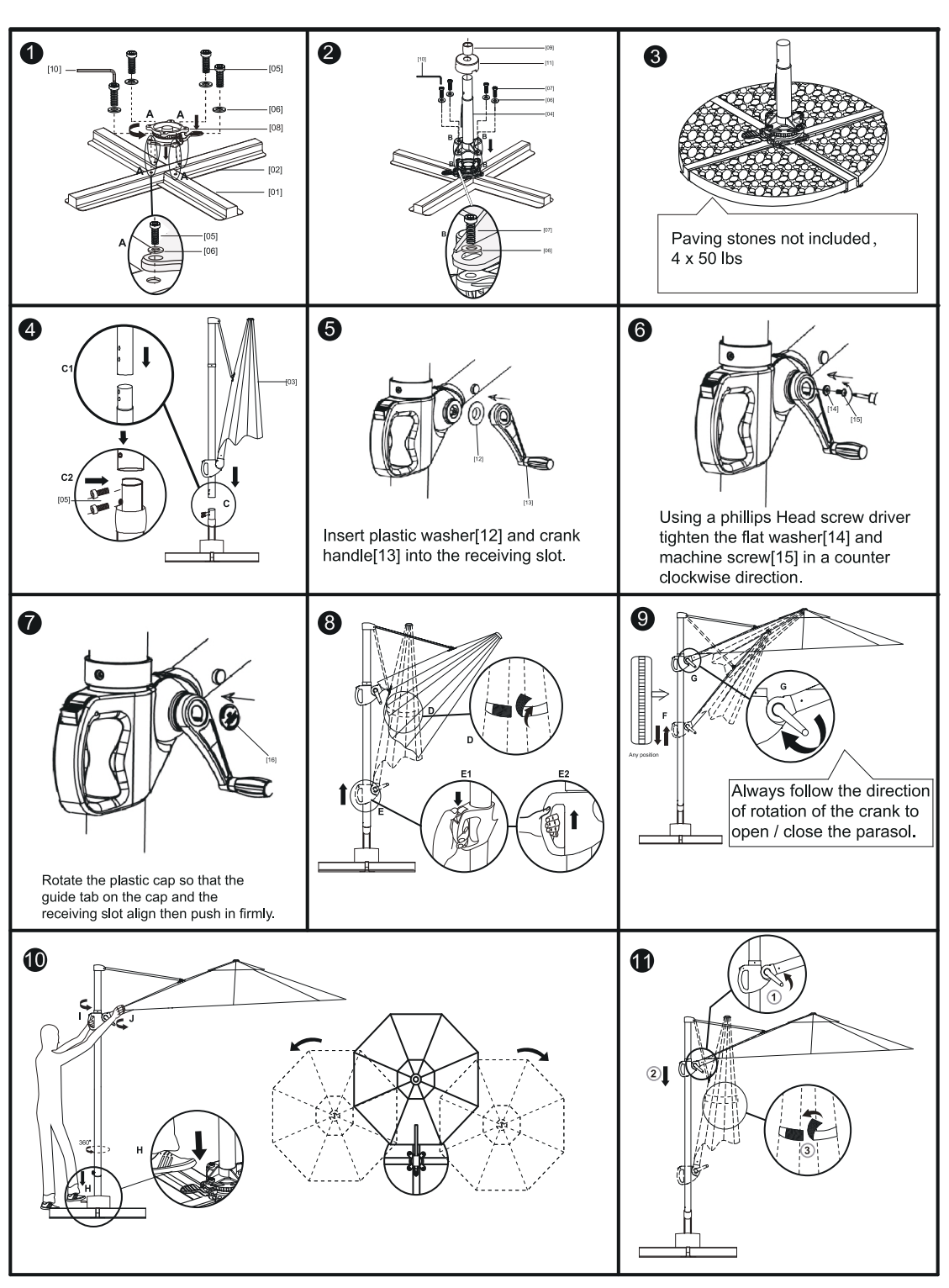

3. Paving stones not included, 4 x 50 lbs

5. Insert plastic washer[12] and crank handle[13] into the receiving slot.

6. Using a phillips Head screw driver tighten the flat washer[14] and machine screw[15] in a counter clockwise direction.

7. Rotate the plastic cap so that the guide tab on the cap and the receiving slot align then push in firmly.

9. Always follow the direction of rotation of the crank to open / close the parasol.

6.6*10FT PATIO UMBRELLA

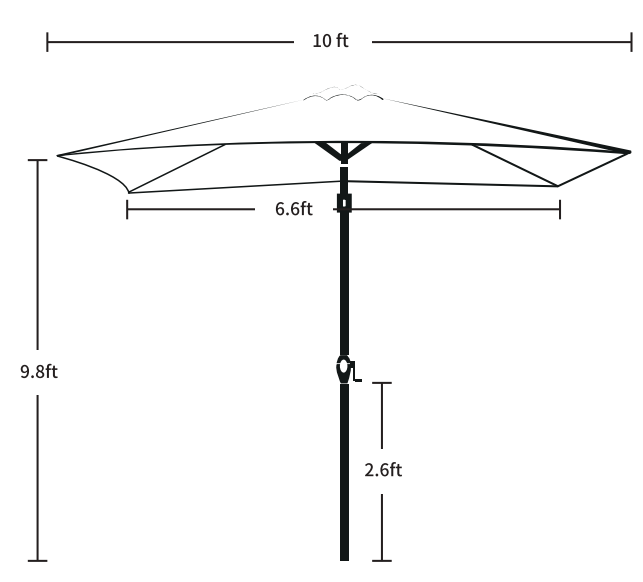
10 ft
6.6ft
9.8ft
2.6ft

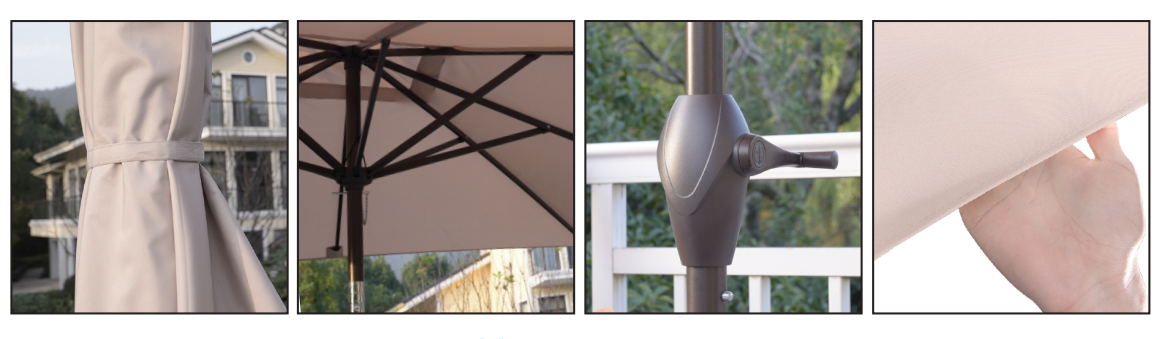

7.5*7.5FT PATIO UMBRELLA

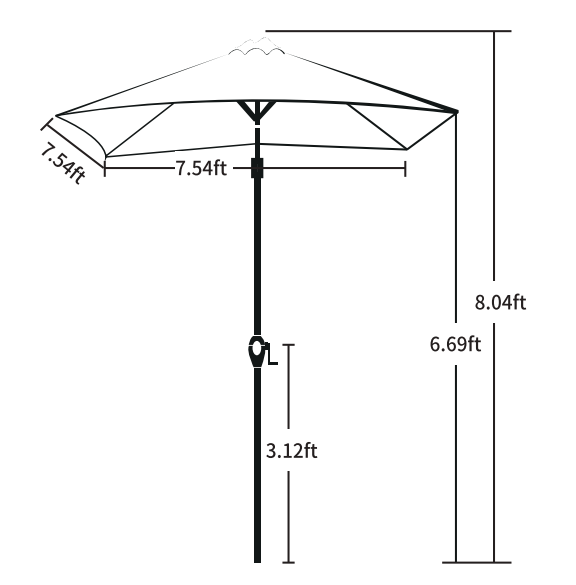
7.54ft
7.54ft
8.04ft
6.69ft
3.12ft

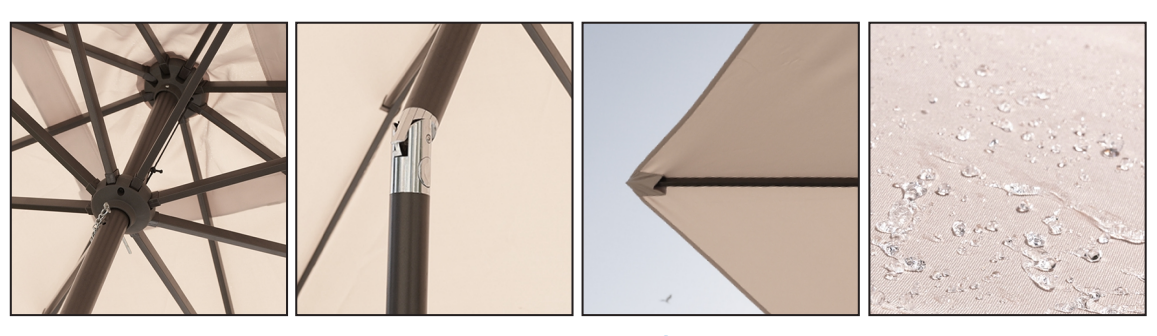

Warnings and Cautions

DANGER: Keep children out of the assembly area during assembly.

WARNING: Do not use the umbrella during periods of high winds and rain as this may result in personal injury and/or damage.

WARNING: Be sure to secure and/or weight the base of the umbrella.

WARNING: Always take the umbrella down when not in use.

WARNING: To prevent damage to the canopy, open the umbrella facing the opposite direction that the wind is blowing.

IMPORTANT: If the crank becomes too hard to crank, check to see if the rope has come off the pulley. If you continue to turn the crank, the rope or crank handle could break.

IMPORTANT: Placement of the umbrella over or near a swimming pool can cause fading of the canopy.