YY131012500

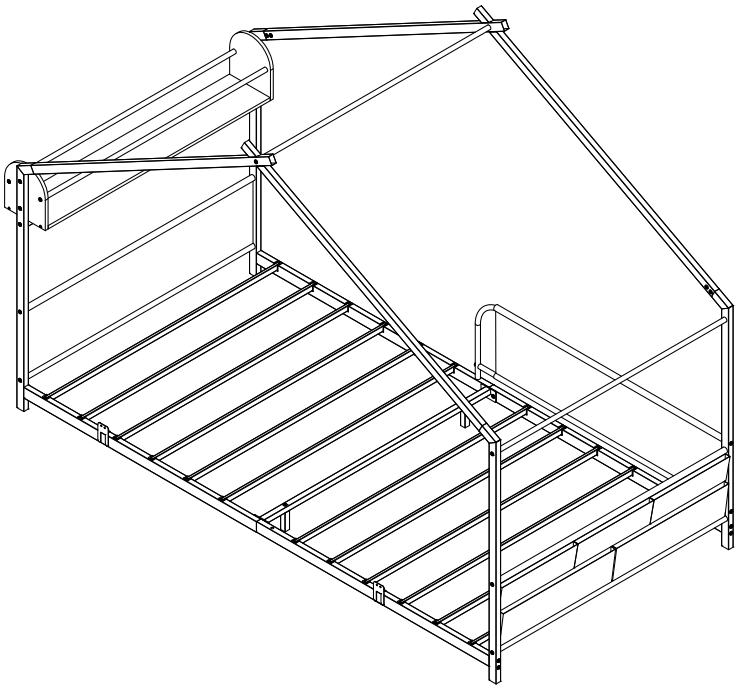

Note:
ShouKd be assembKed on fKat ground to keep baKance.
It needs at Keast two peopKe to instaKK.
Before starting the assembKy, you must read the whoKe manuaK and foKKow the instructions.

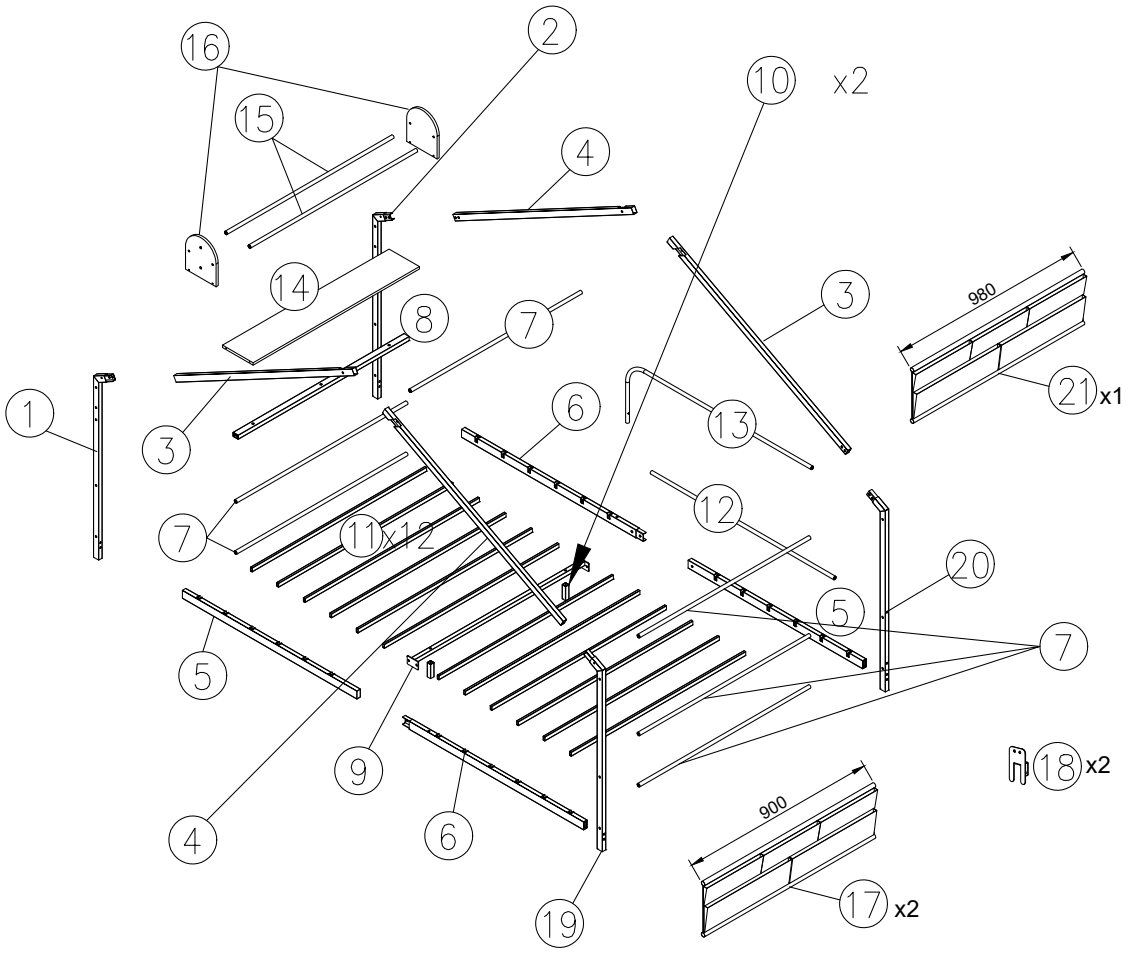

⚠PKs make sure aKK the accessories are compKete!



1 1PC



2 1PC

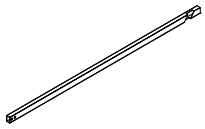

3 2PCS

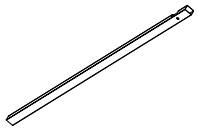

4 2PCS

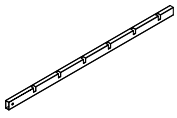

5 2PCS

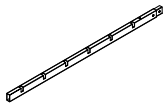

6 2PCS

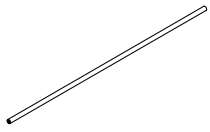

7 6PCS

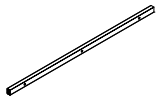

8 1PC

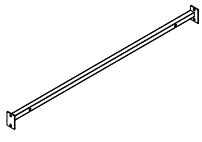

9 1PC

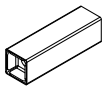

10 2PCS



11 12PCS

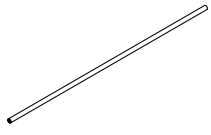

12 1PC

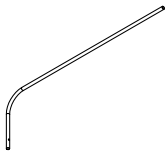

13 1PC

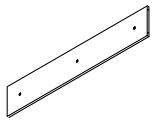

14 1PC

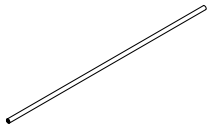

15 2PCS

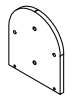

16 2PCS

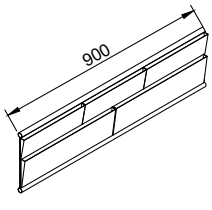

17 2PCS



18 2PC



19 1PC



20 1PC

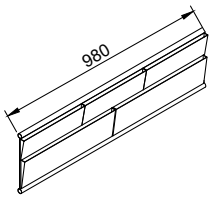

21 1PC

⚠ PKs make sure aKK the accessories are compKete!



M5*40mm

A	(4+1)PCS



M6*15mm

B	(12+1)PCS

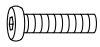

M6*28mm

C	(7+1)PCS



M6*40mm

D	(23+2)PCS

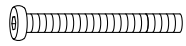

M6*60mm

E	(1+1)PCS

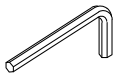

4mm

F	1PC

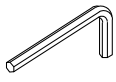

3mm

G	1PC

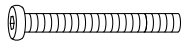

M6*50mm

H	(8+1)PCS

Step 1

A	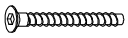	M5*40mm	4pcs
D	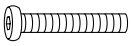	M6*40mm	4pcs

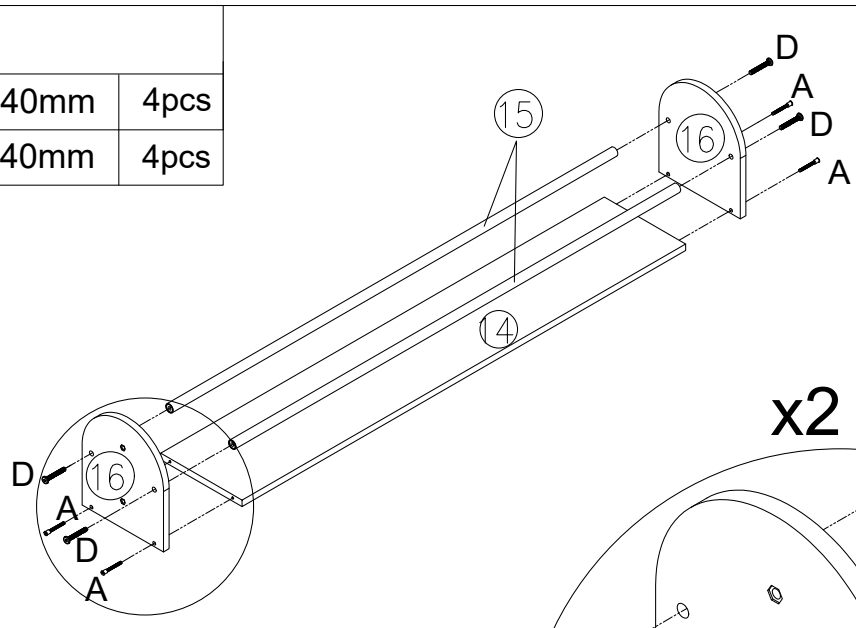

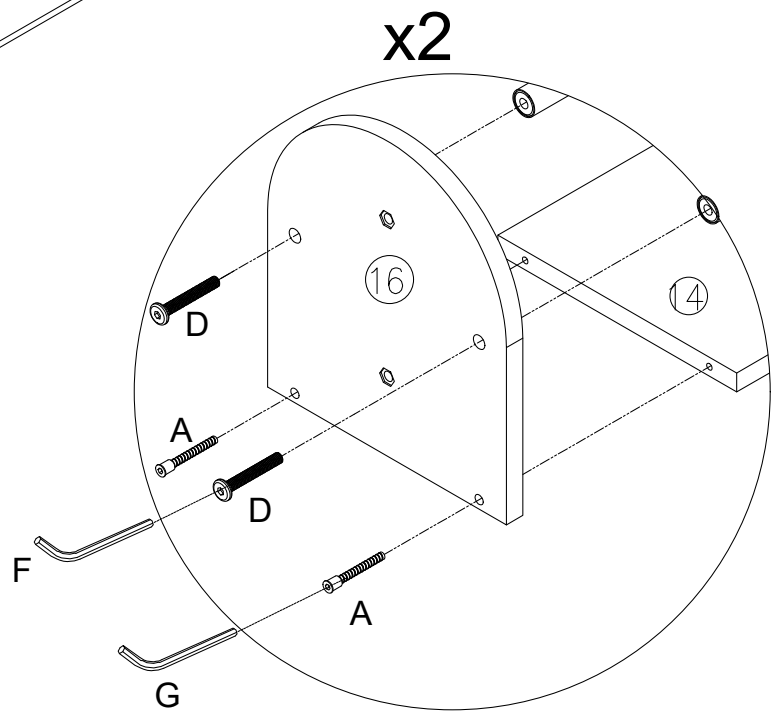

Step 2

C	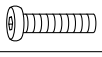	M6*28mm	3pcs

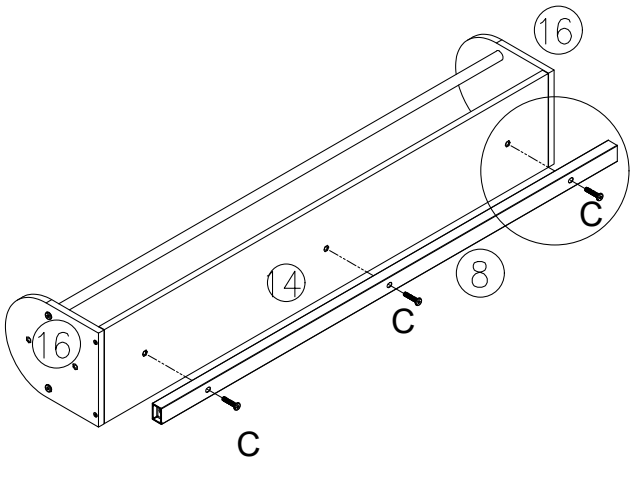

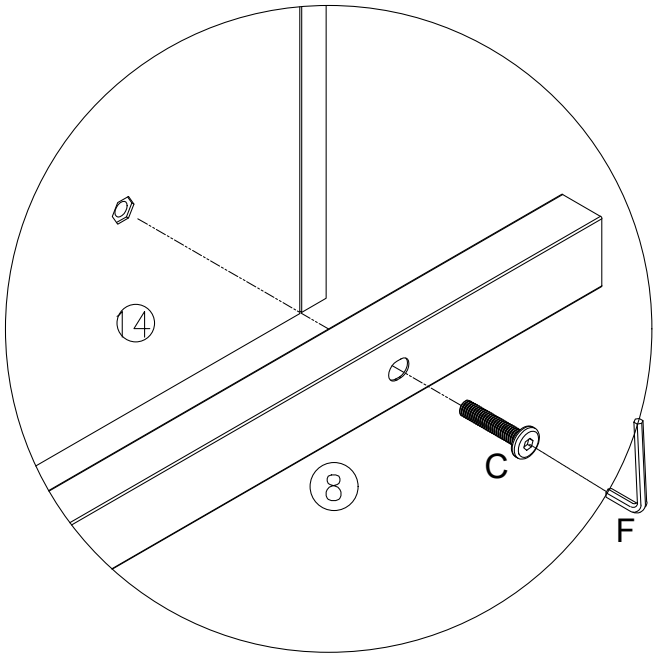

Step 3

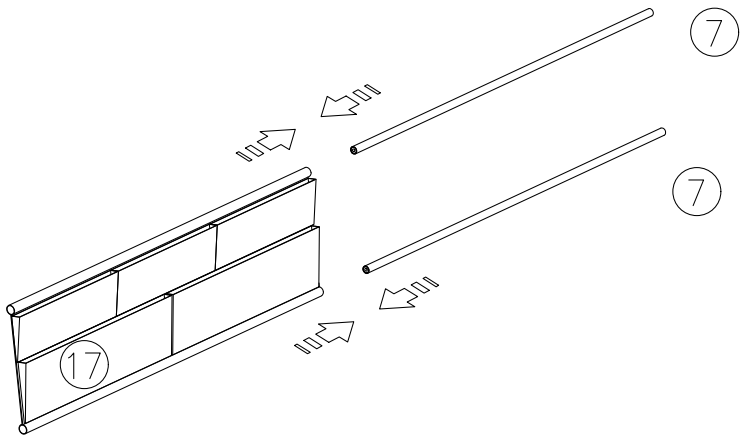

x2

Step 4

B		M6*15mm	8pcs

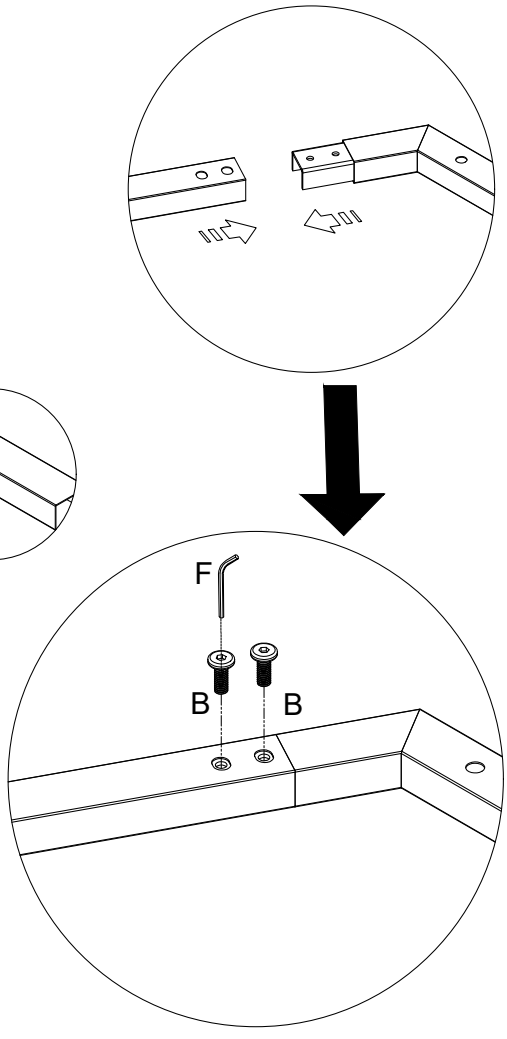

Step 5

C		M6*28mm	4pcs
D	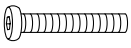	M6*40mm	6pcs

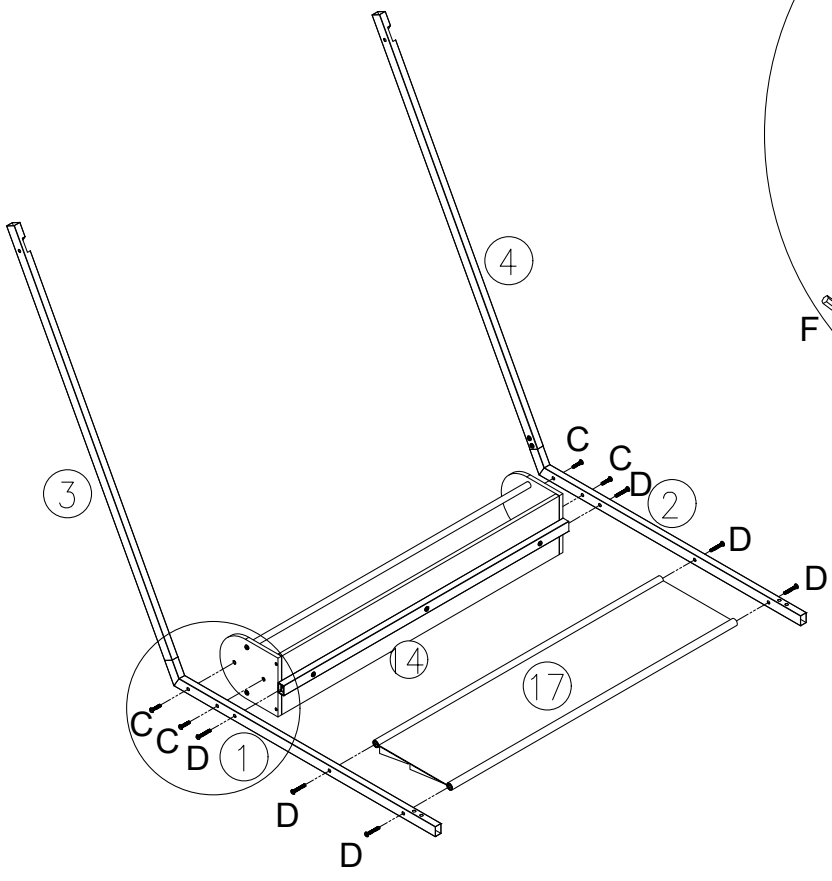

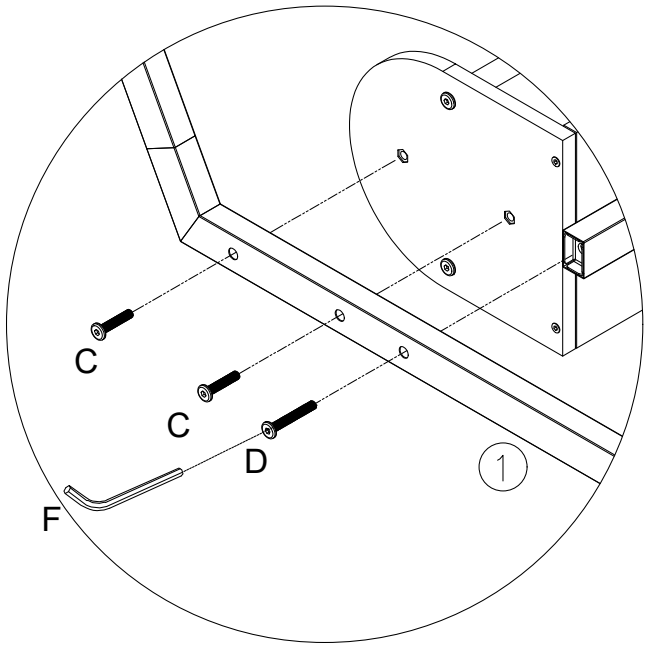

Step 6

D	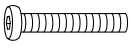	M6*40mm	6pcs

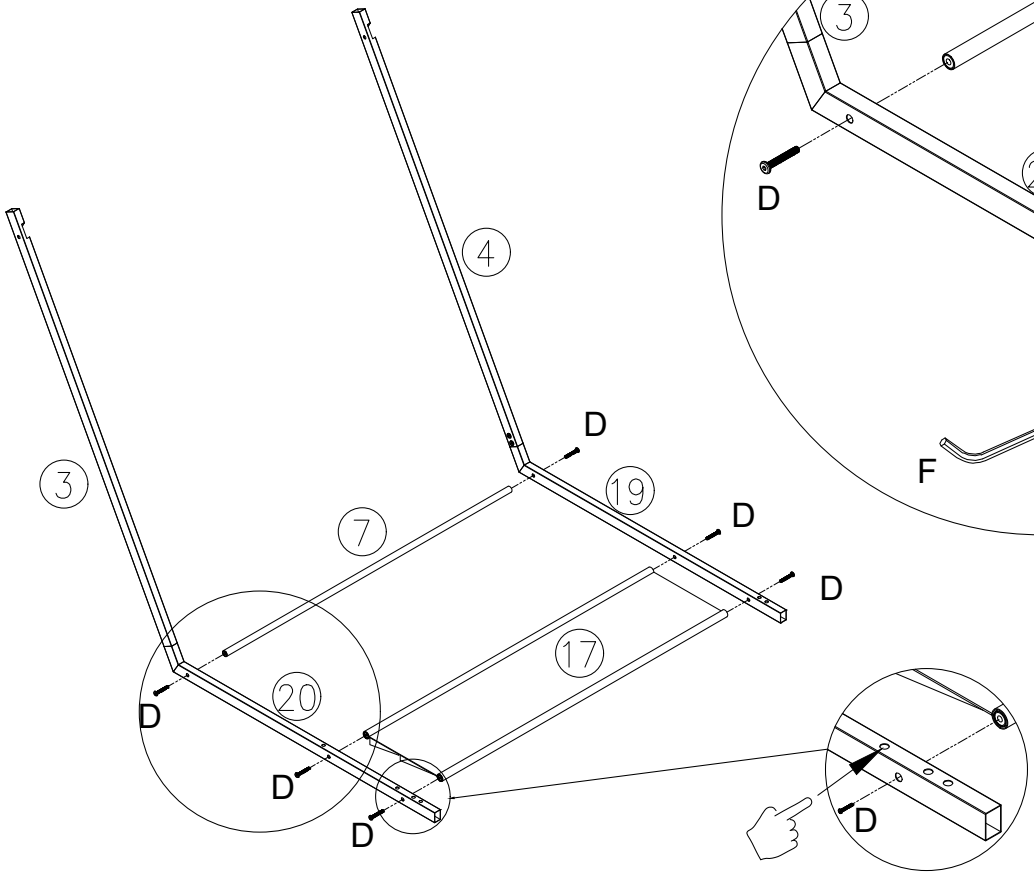

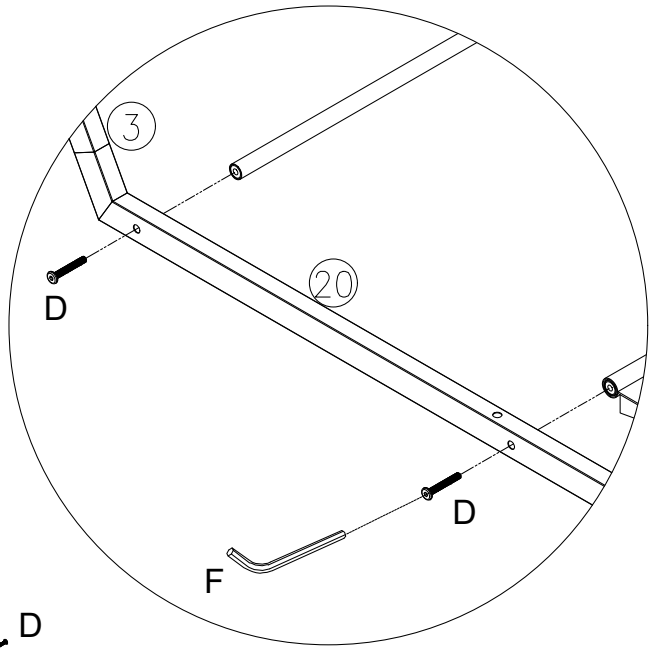

Step 7

D	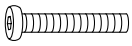	M6*40mm	2pcs

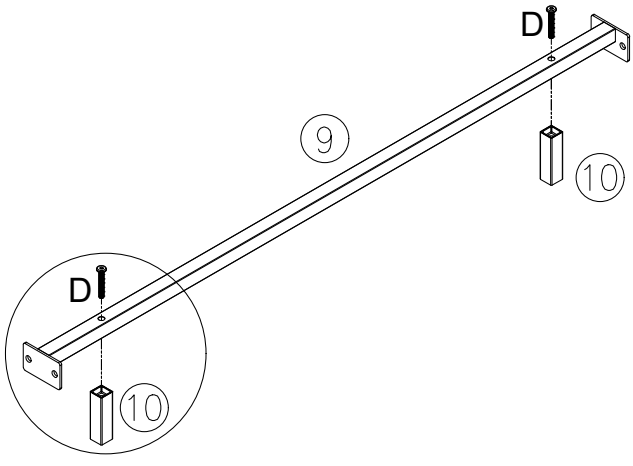

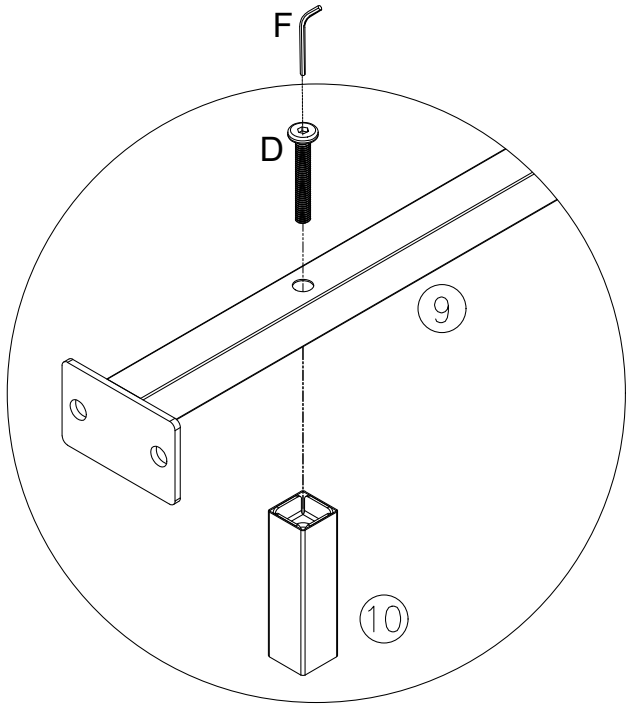

Step 8

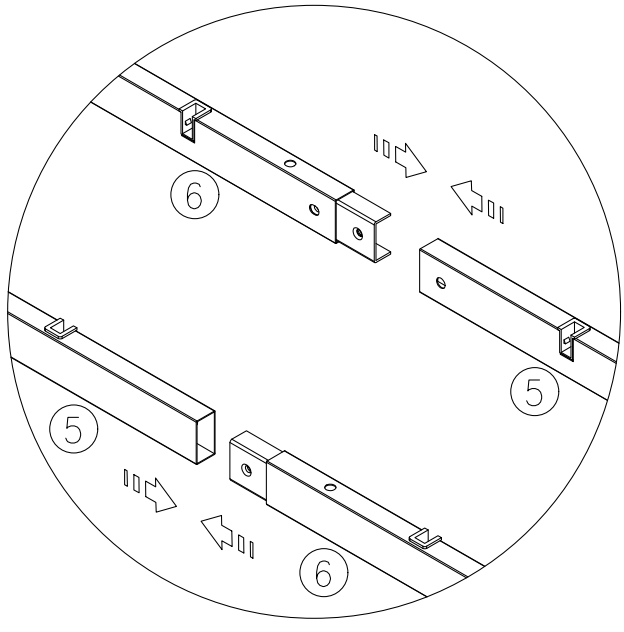

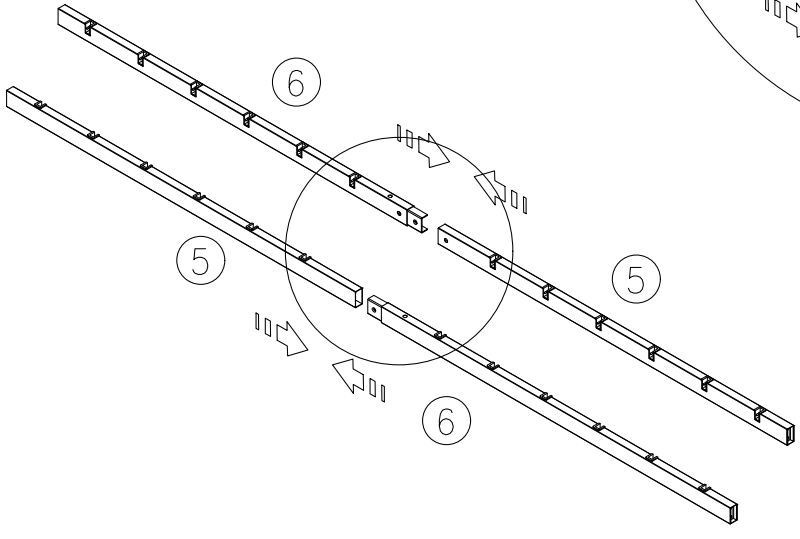

Step 9

B		M6*15mm	4pcs

Step 10

D	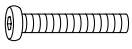	M6*40mm	1pcs

Step 11

E	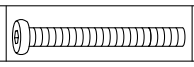	M6*60mm	1pcs

Step 12

D	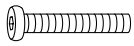	M6*40mm	2pcs
H	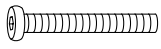	M6*50mm	4pcs

Step 13

H	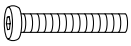	M6*50mm	4pcs

Step 14

D	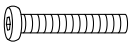	M6*40mm	2pcs

Step 15

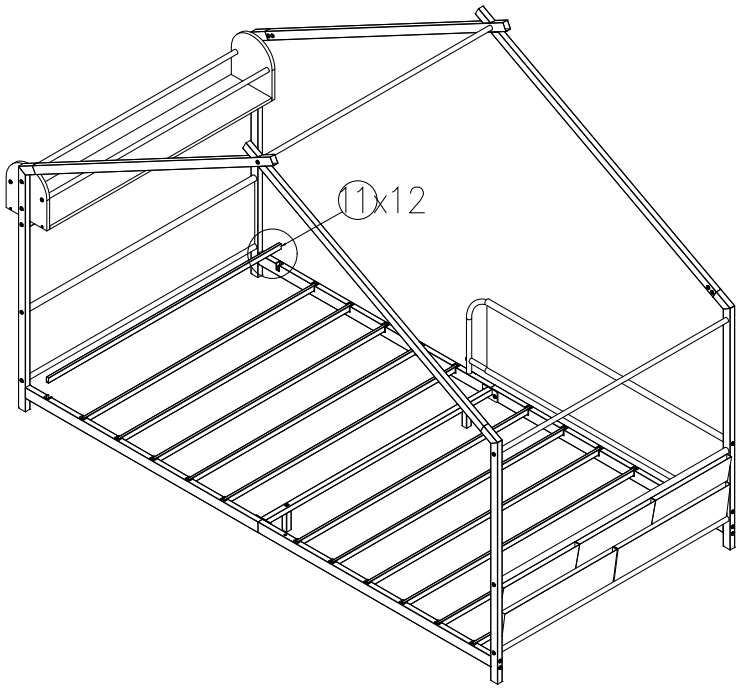

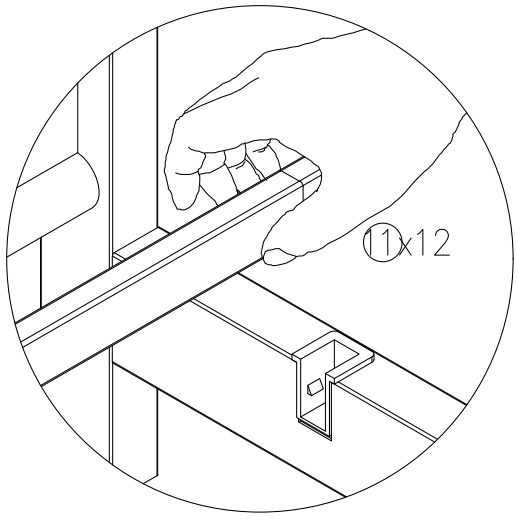

Step 16

