Four-door And One-drawer Cabinet

Product ID. 7LHMH

Scan for Support
support@garvee.com

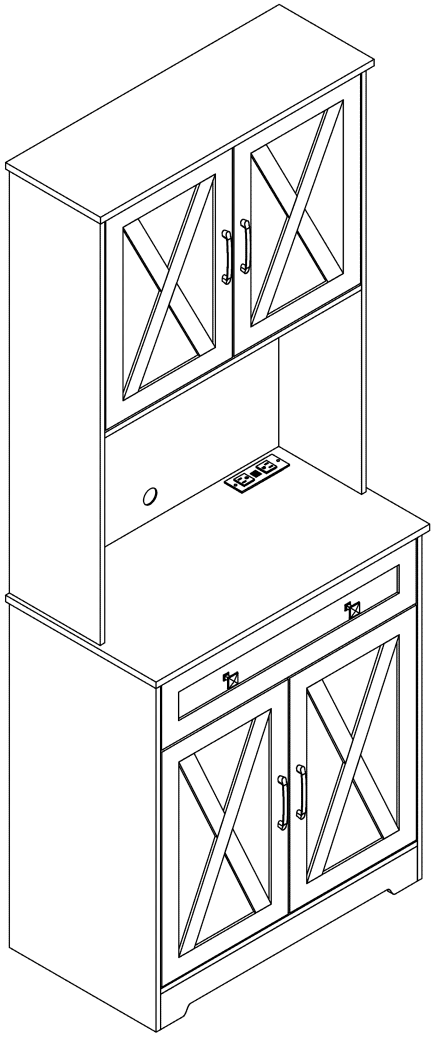

Distributed by
GARVEE.com

V2608049HXY

V:202603

ASSEMBLY INSTRUCTIONS

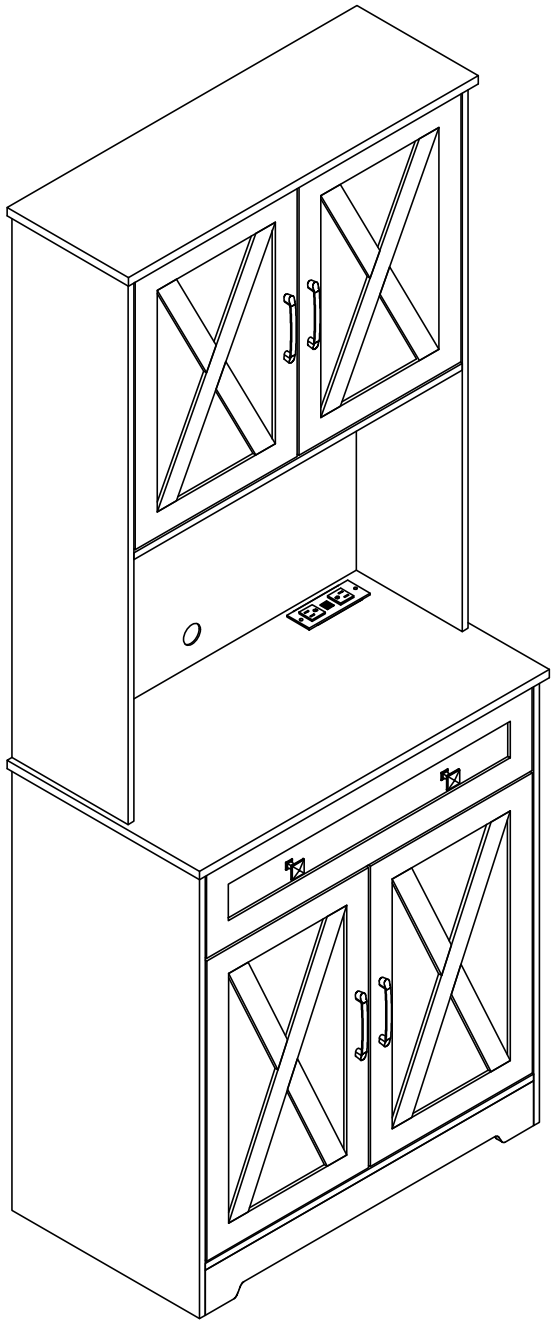

SKU:PTH_33FE

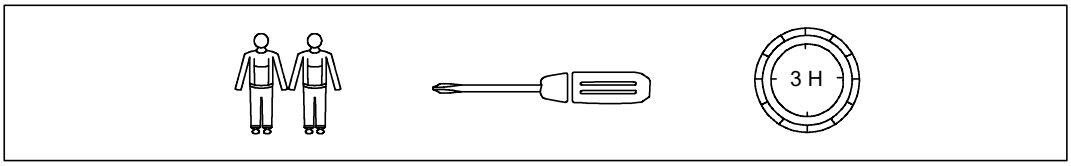

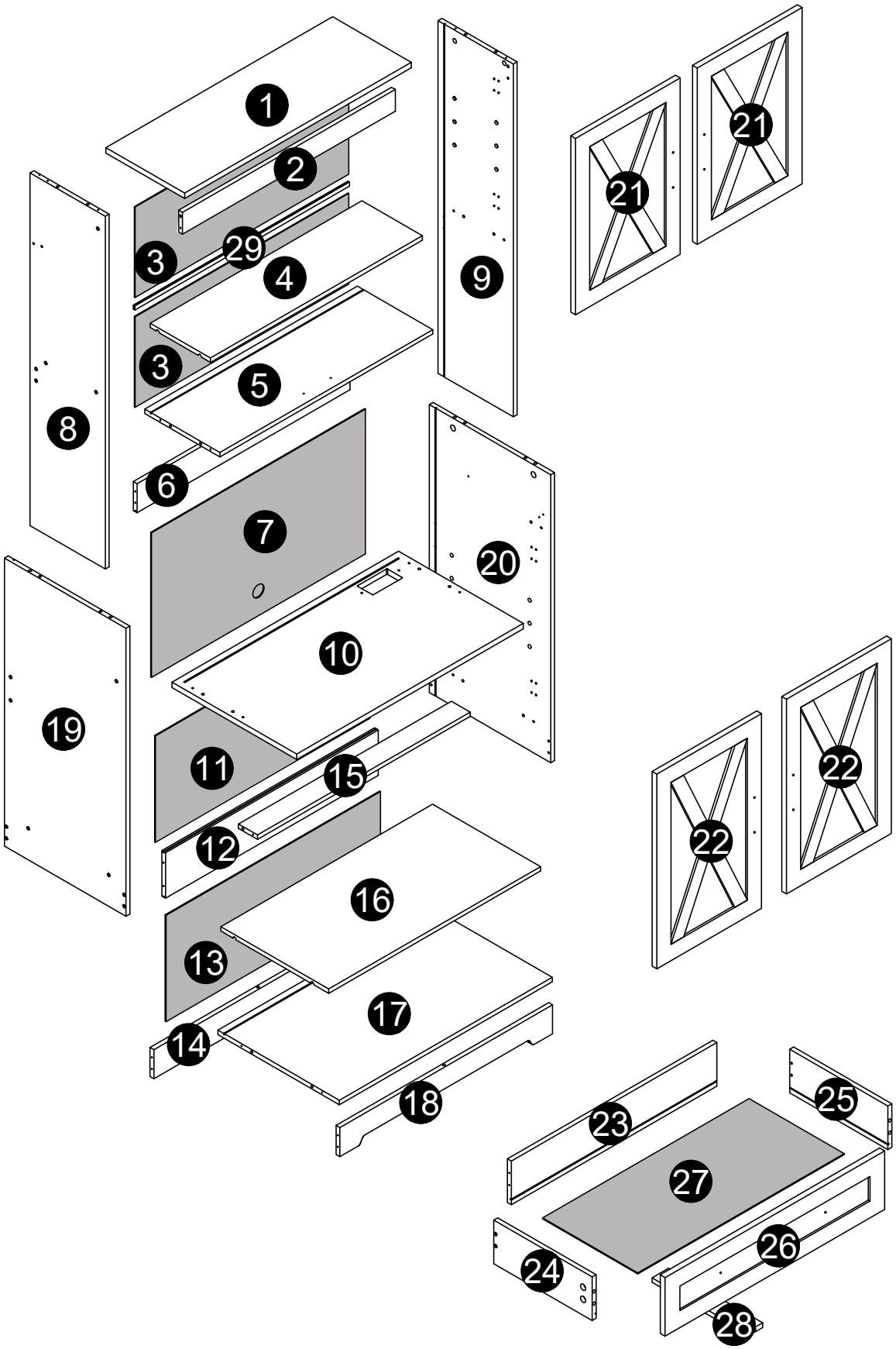
1
2
29
3
4
3
5
6
7
8
9
10
11
12
13
14
15
16
17
18
19
20
21
21
22
22
23
24
25
26
27
28

1 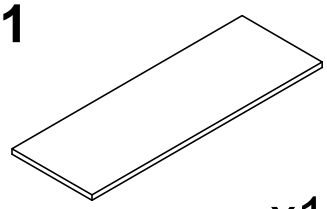 x1	2 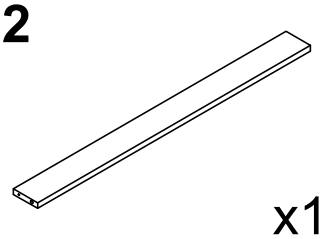 x1	3 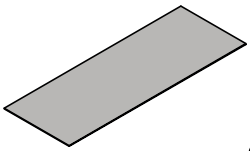 x2	4 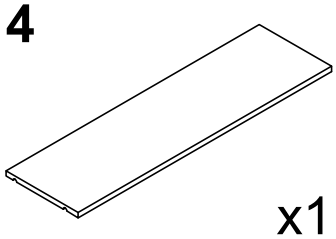 x1
5 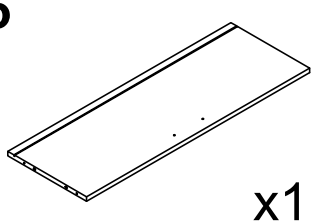 x1	6 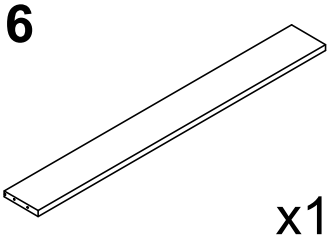 x1	7 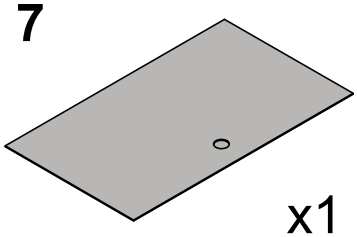 x1	8 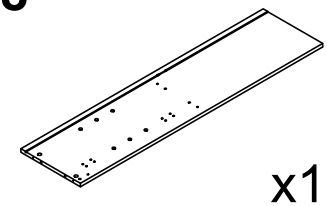 x1
9 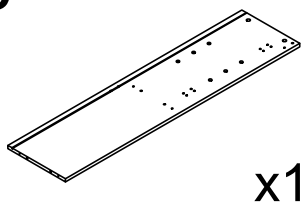 x1	10 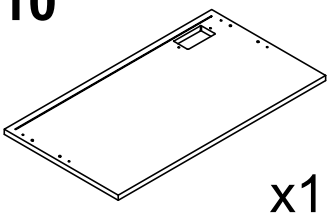 x1	11 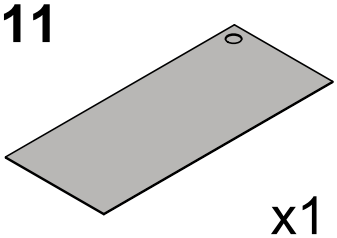 x1	12 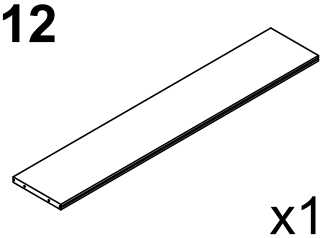 x1
13 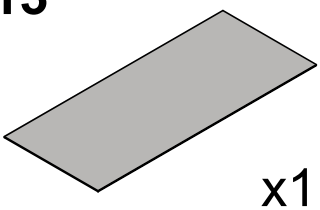 x1	14 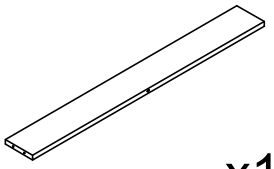 x1	15 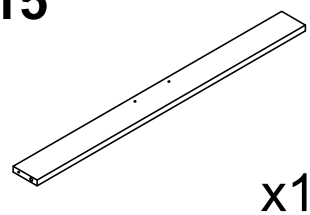 x1	16 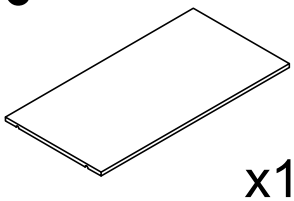 x1
17 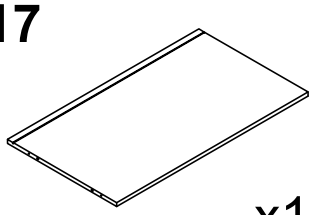 x1	18 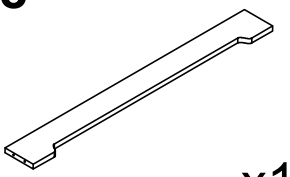 x1	19 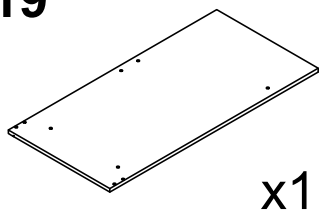 x1	20 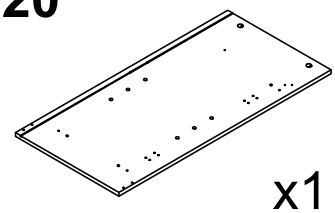 x1
21 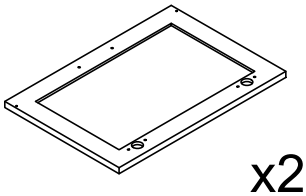 x2	22 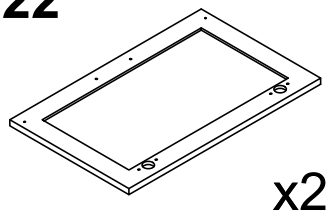 x2	23 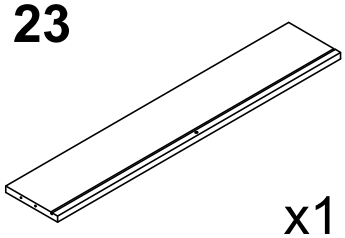 x1	24 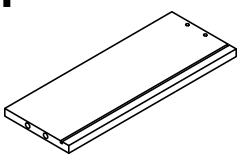 x1
25 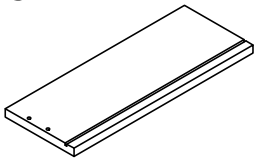 x1	26 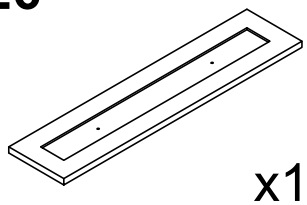 x1	27 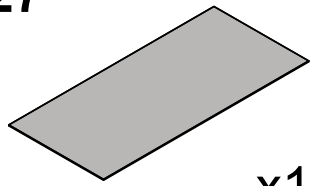 x1	28 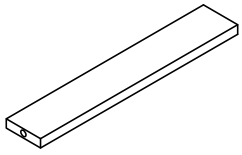 x1
29 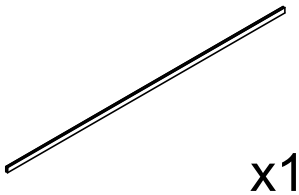 x1			

A 6x35mm 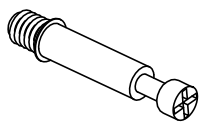 x13	**B** 15x10mm  x13	**C** 6x30mm 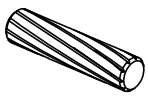 x26(+2)	**D** 4x35mm 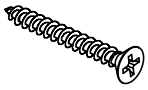 x35(+3)	**E** 3.5x12mm  x62(+3)
F 4x18mm  x4	**G** 3x16mm 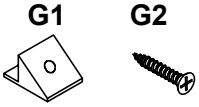 x16(+1)	**H** 5x35mm 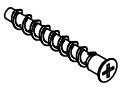 x4	**I** 18mm 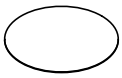 x28(+2)	**J**  x8
K 4x14mm 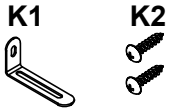 x2	**L** 6x30mm  x2	**M** 3x12mm 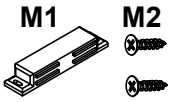 x2	**N** 3x12mm 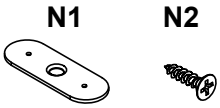 x4	**O** 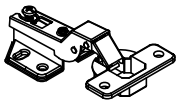 x8
P 4x6mm 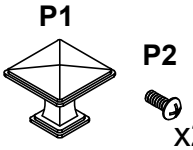 x2	**CR** 300mm 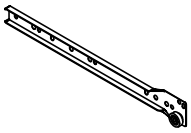 x1	**DR** 300mm 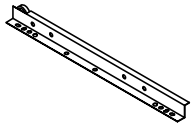 x1	**CL** 300mm 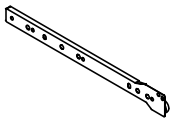 x1	**DL** 300mm 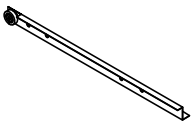 x1
Q 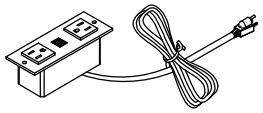 x1				

Step 1

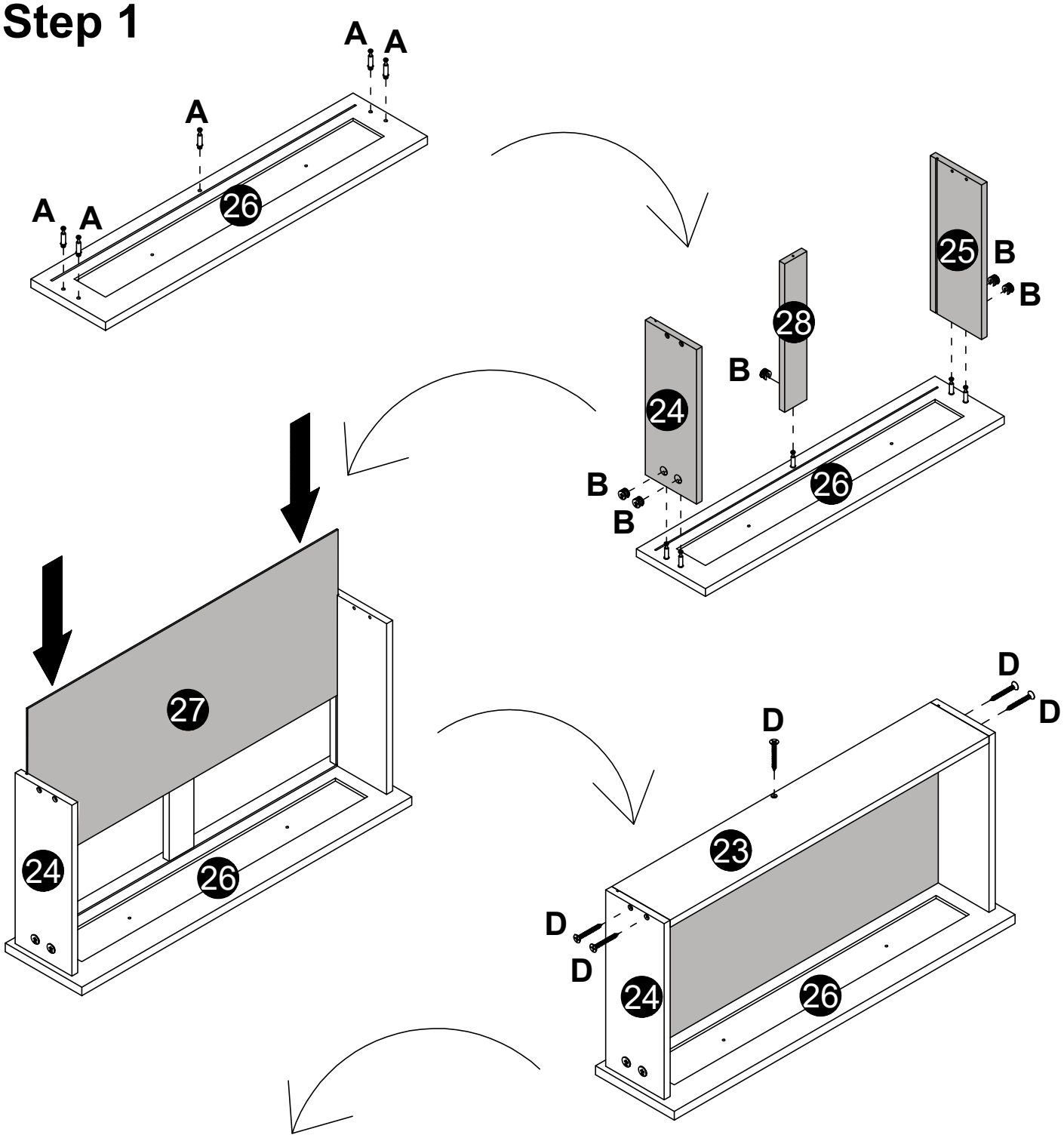

A 6x35mm 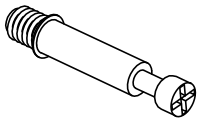 x5	**B** 15x10mm  x5
D 4x35mm 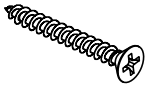 x5	**P** 4x6mm 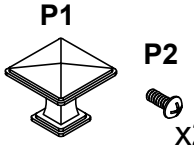 x2

Step 2

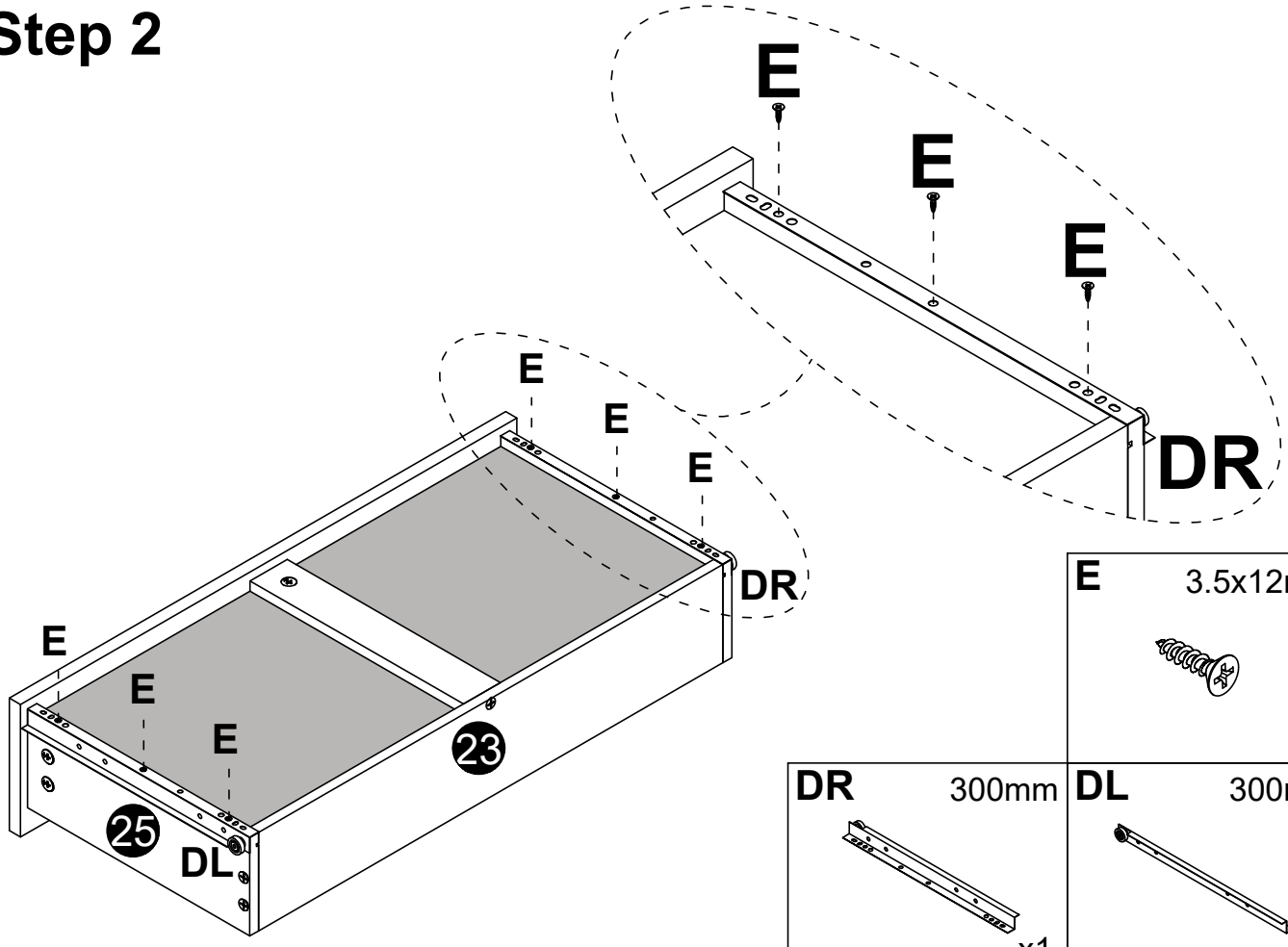

E	3.5x12mm	x6

DR	300mm	x1

DL	300mm	x1

Step 3

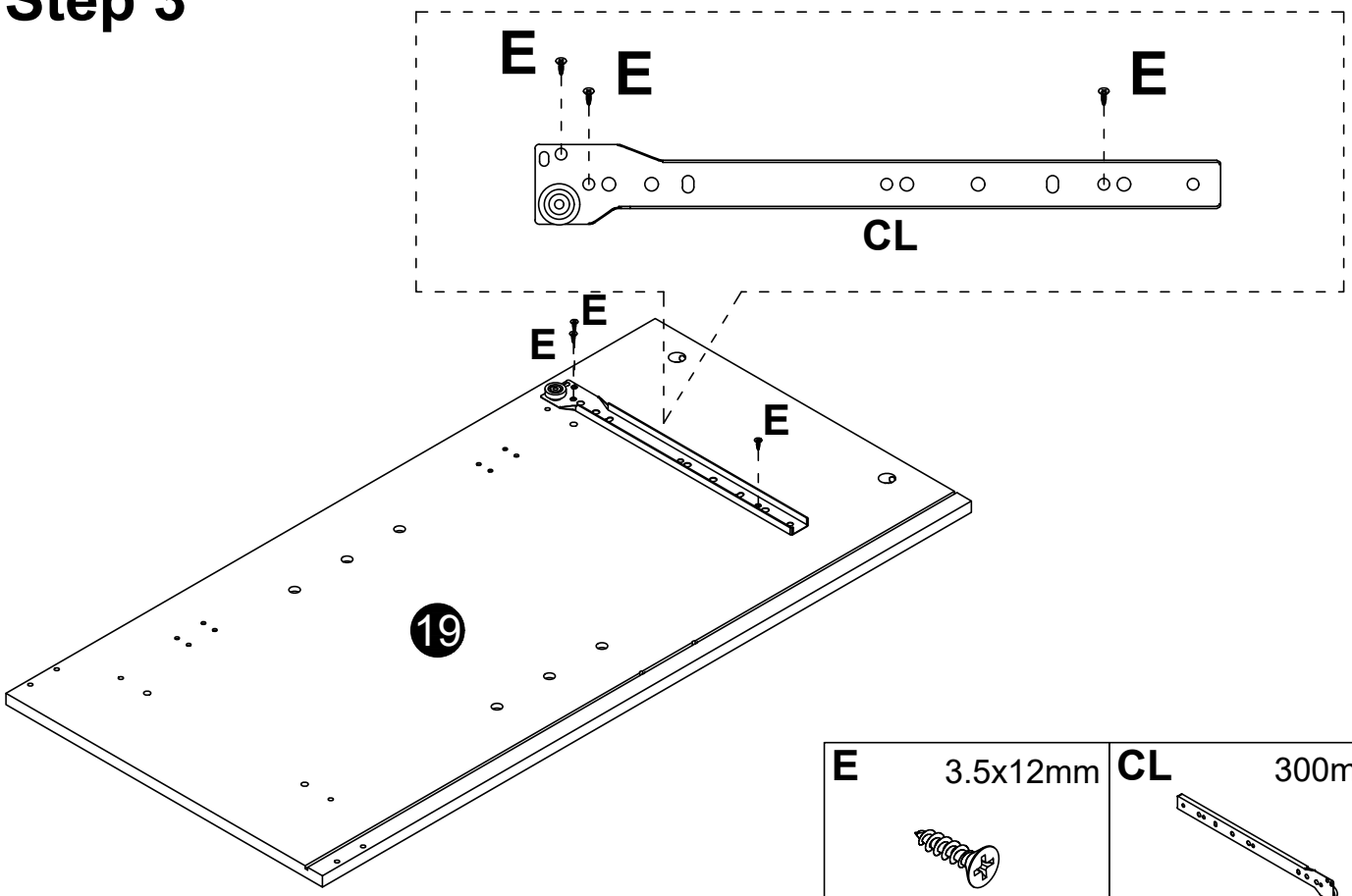

E	3.5x12mm	x3

CL	300mm	x1

Step 4

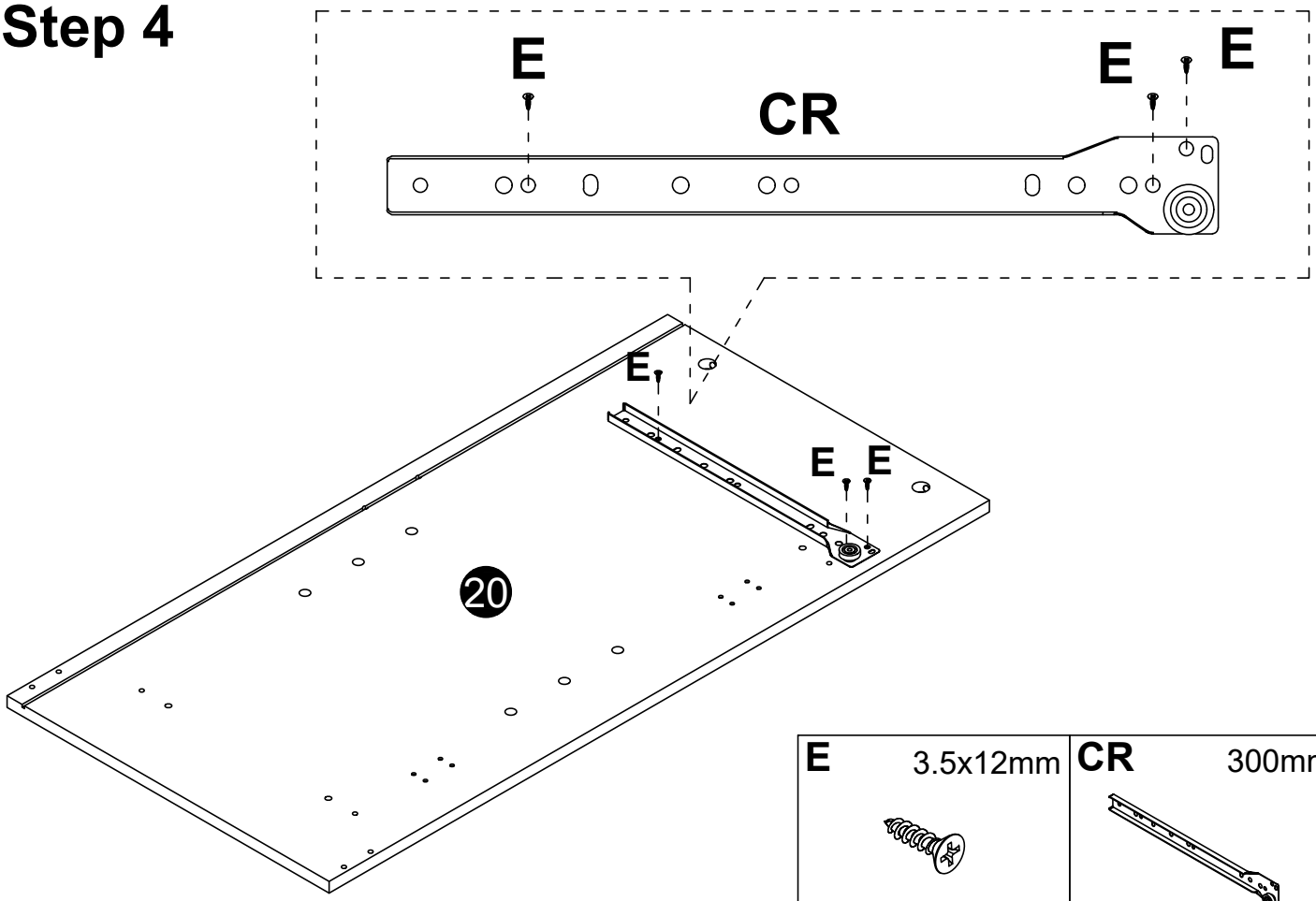

E	3.5x12mm	CR	300mm
	x3		x1

Step 5

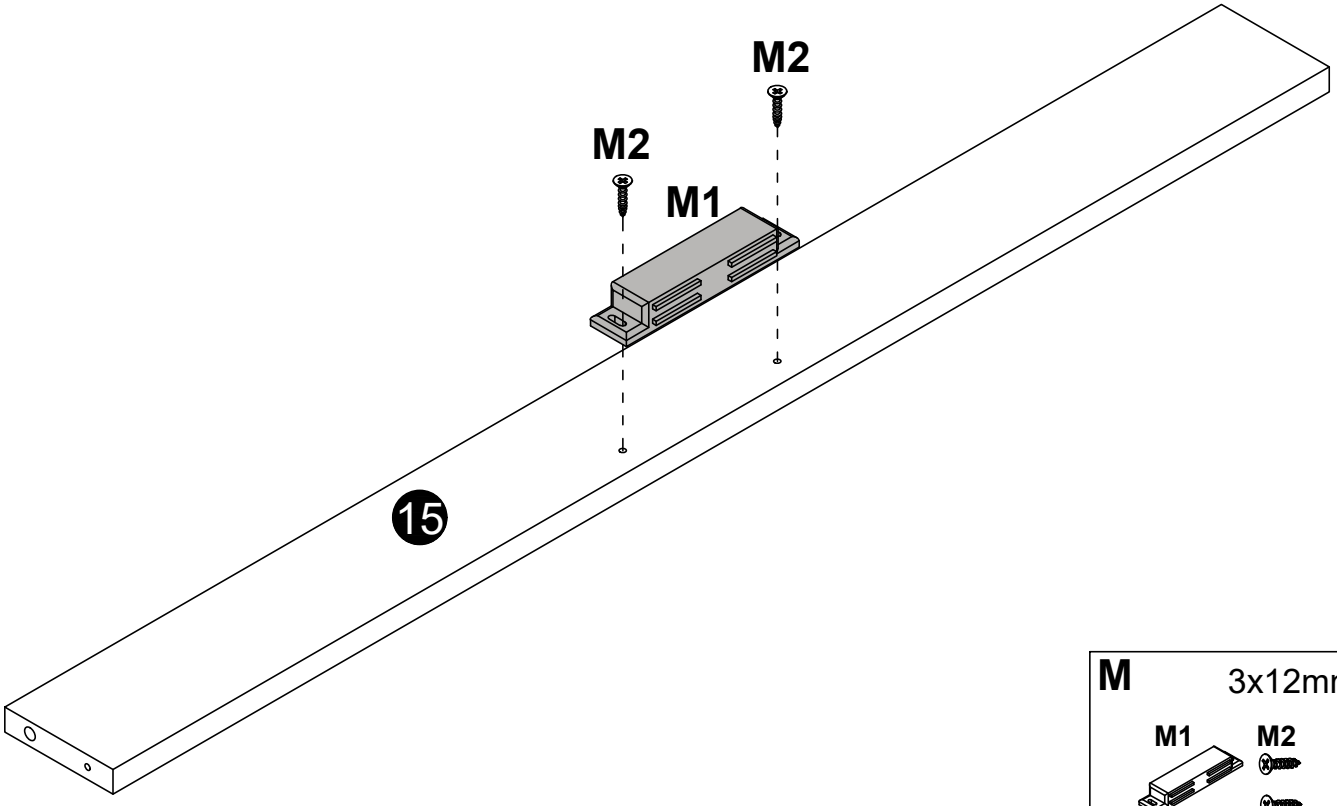

M	3x12mm
M1 M2	x1

Step 6

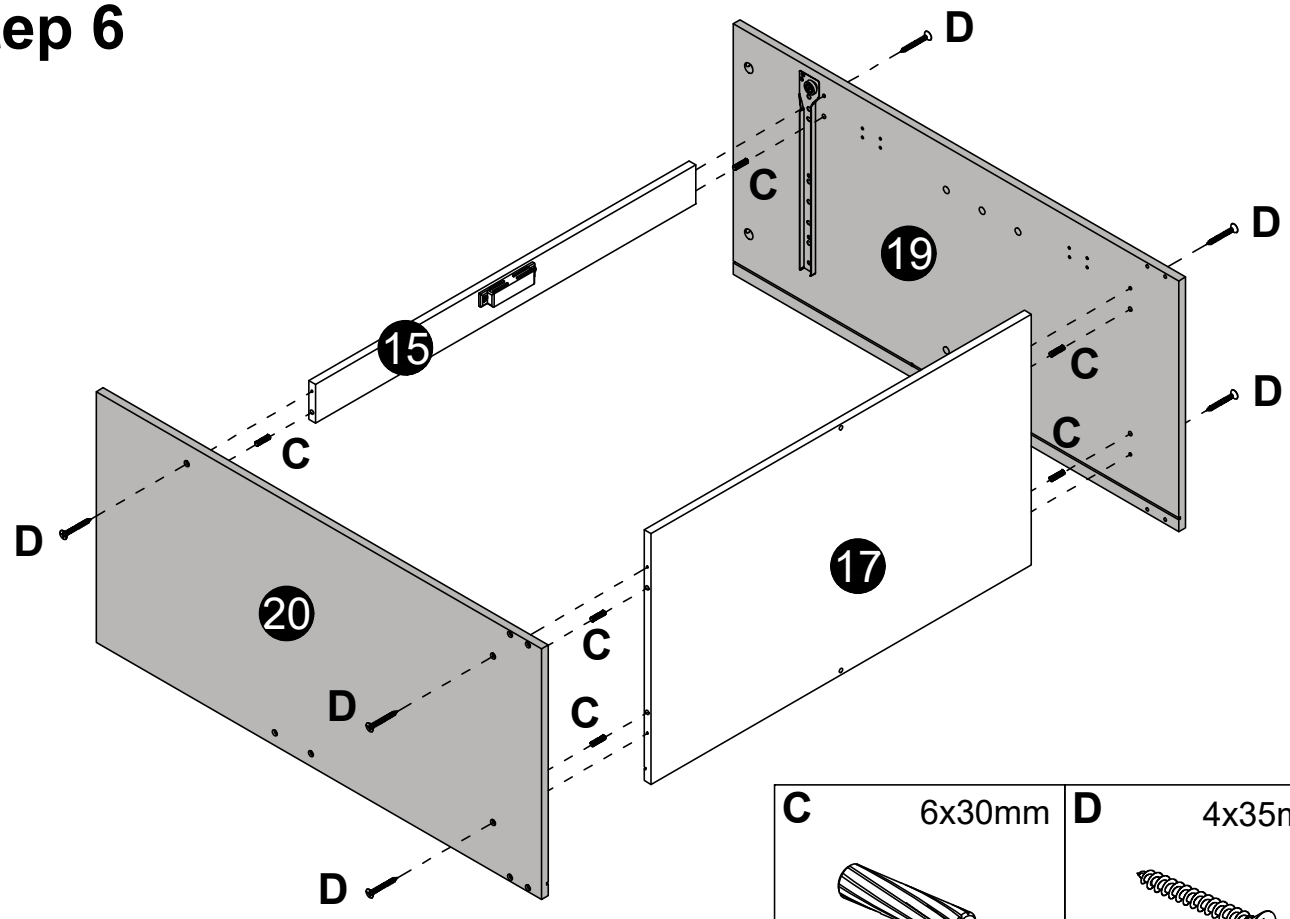

C	6x30mm	D	4x35mm
	x6		x6

Step 7

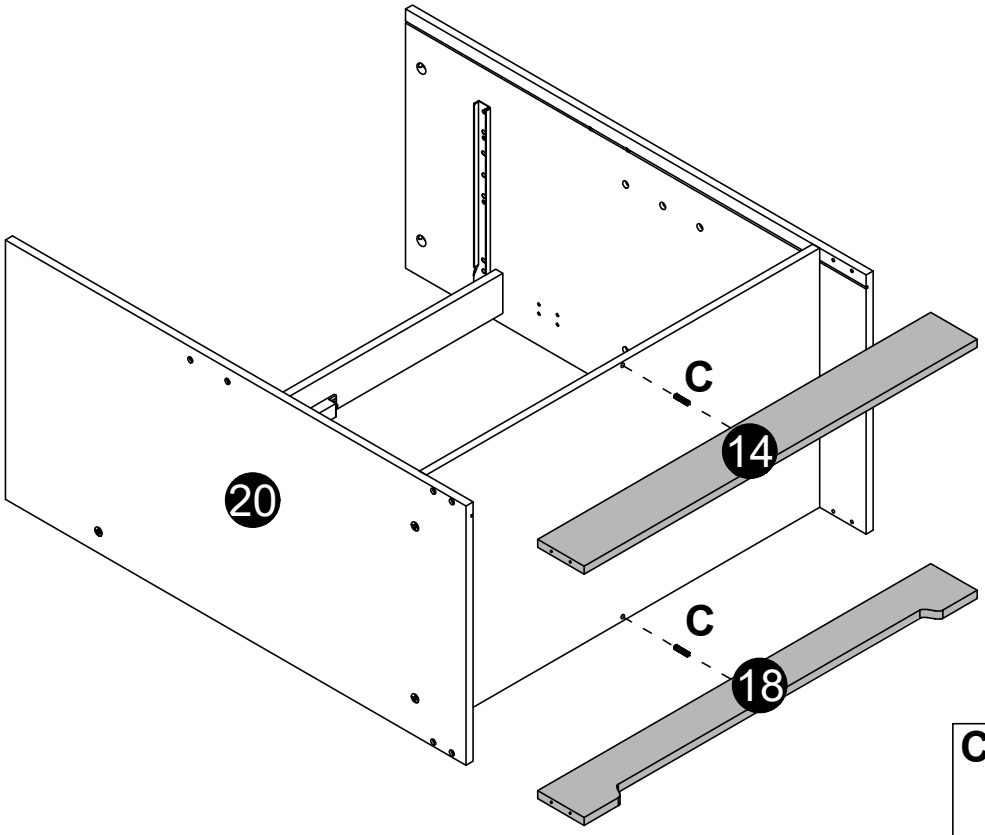

C	6x30mm
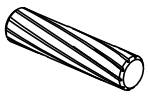	x2

Step 8

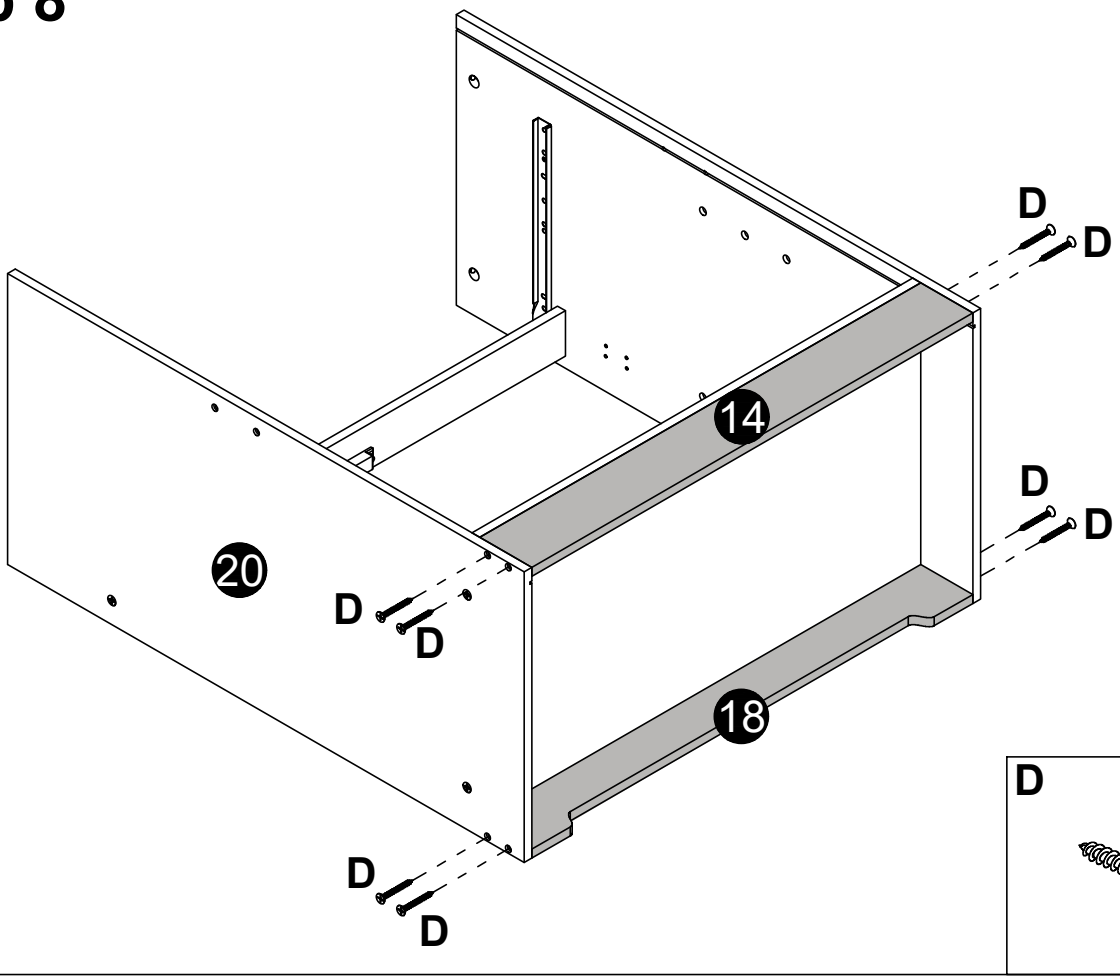

D	4x35mm
	x8

Step 9

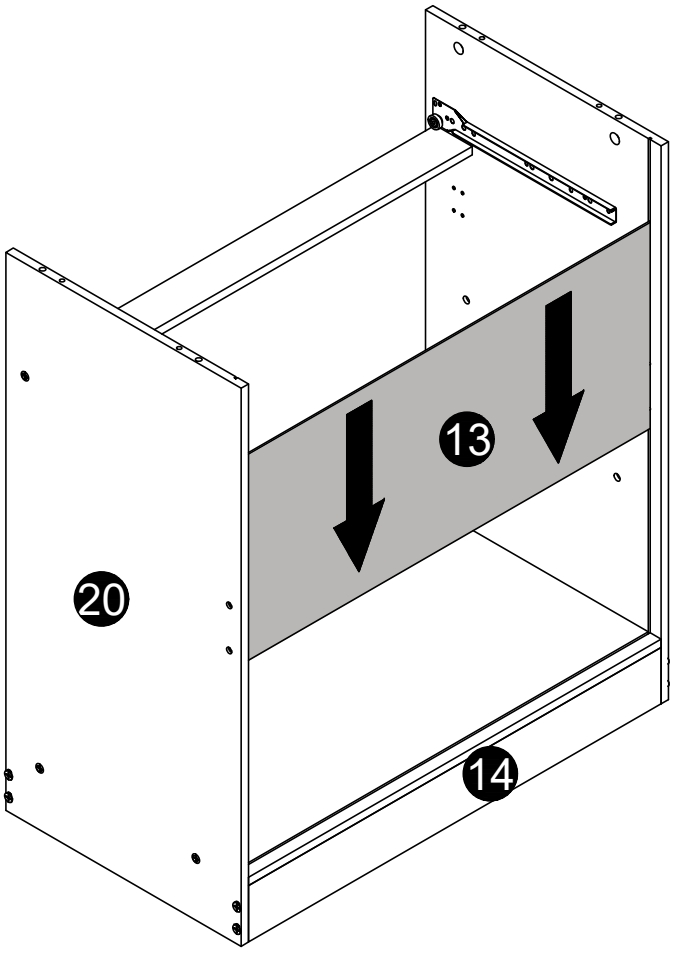

Step 10

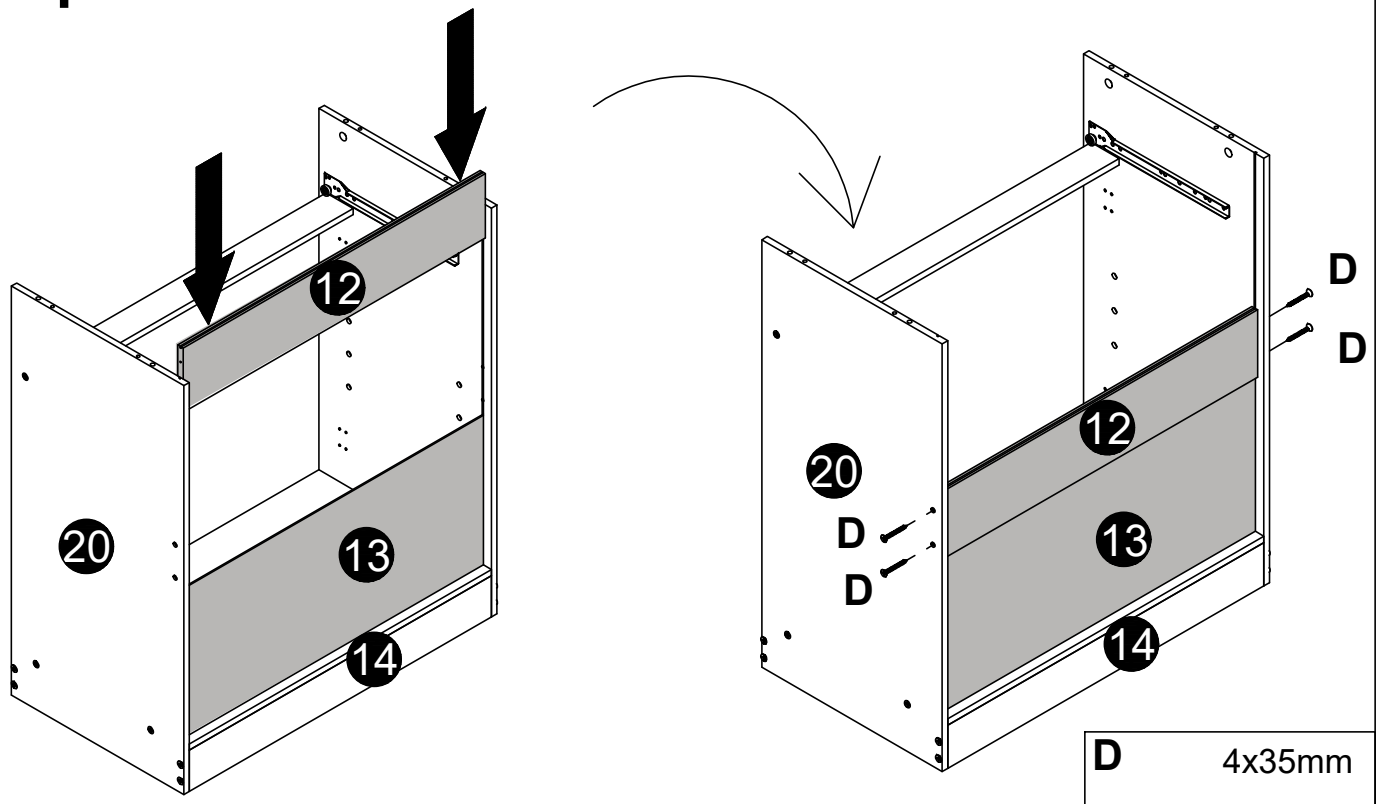

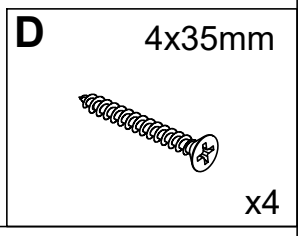

Step 11

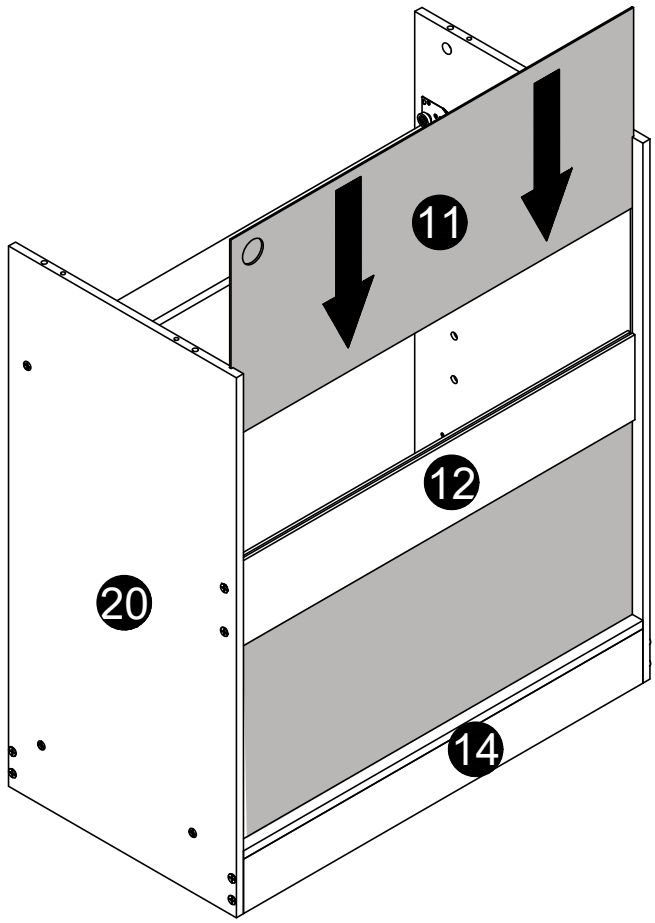

Step 12

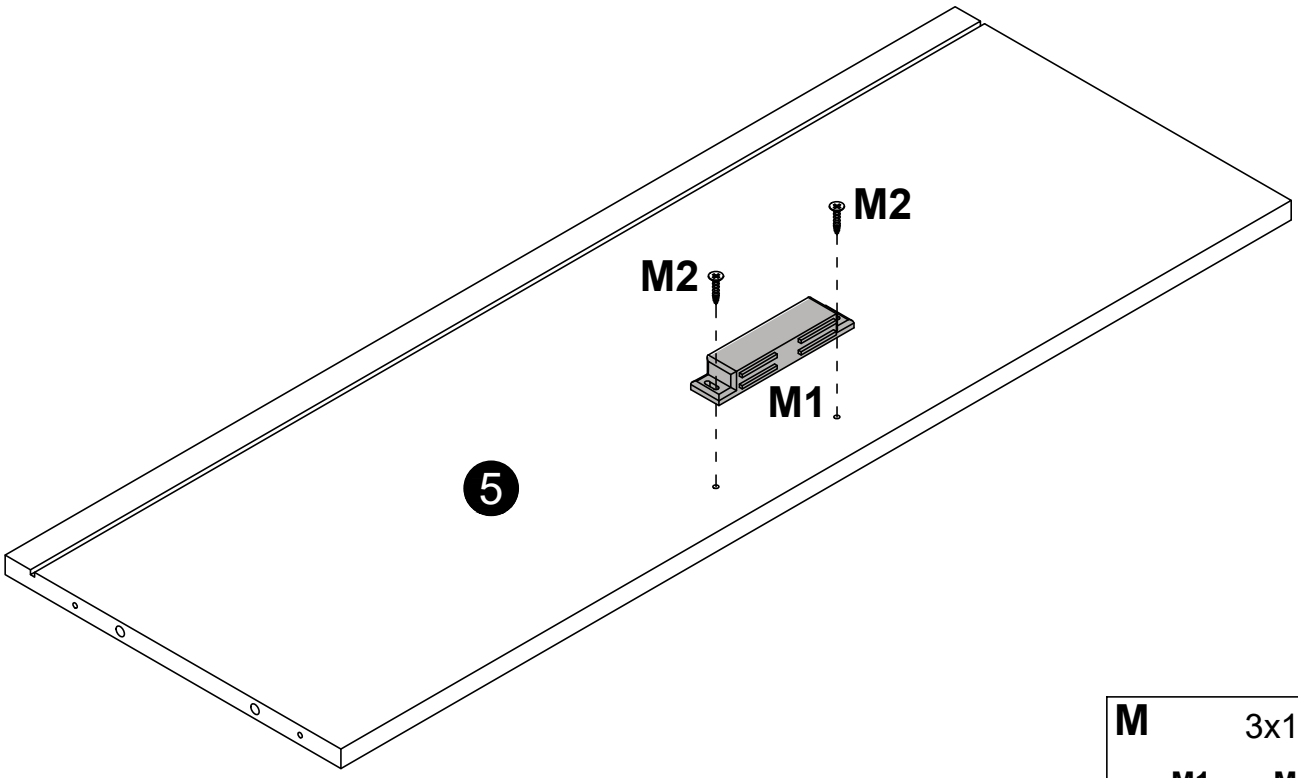

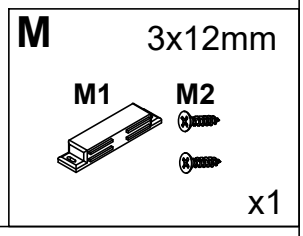

Step 13

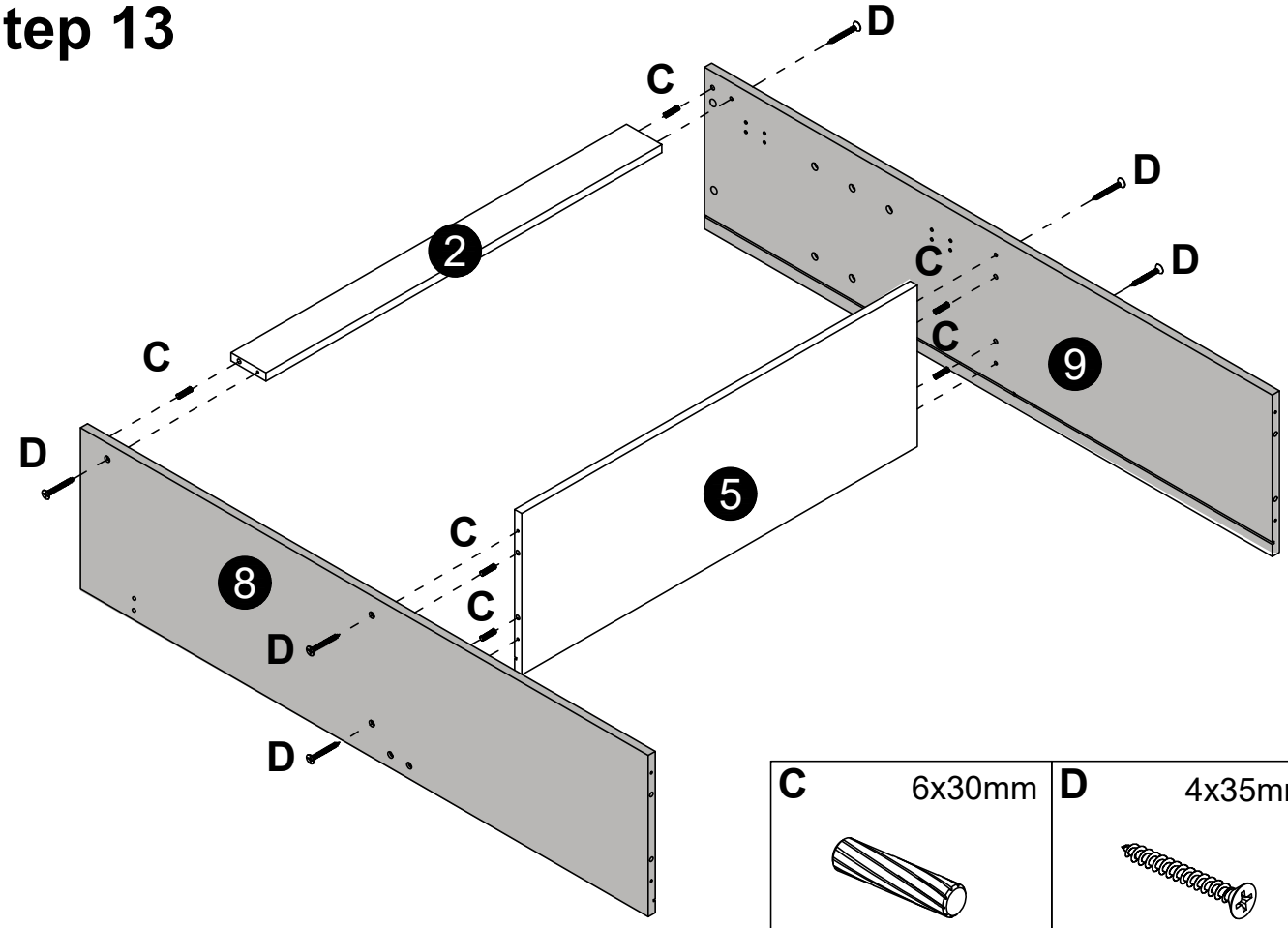

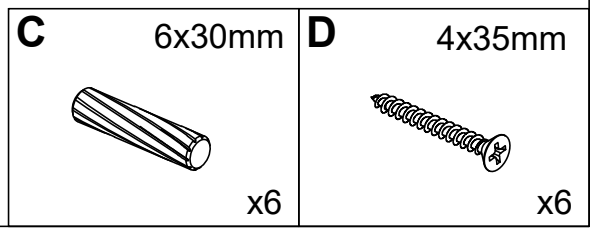

Step 14

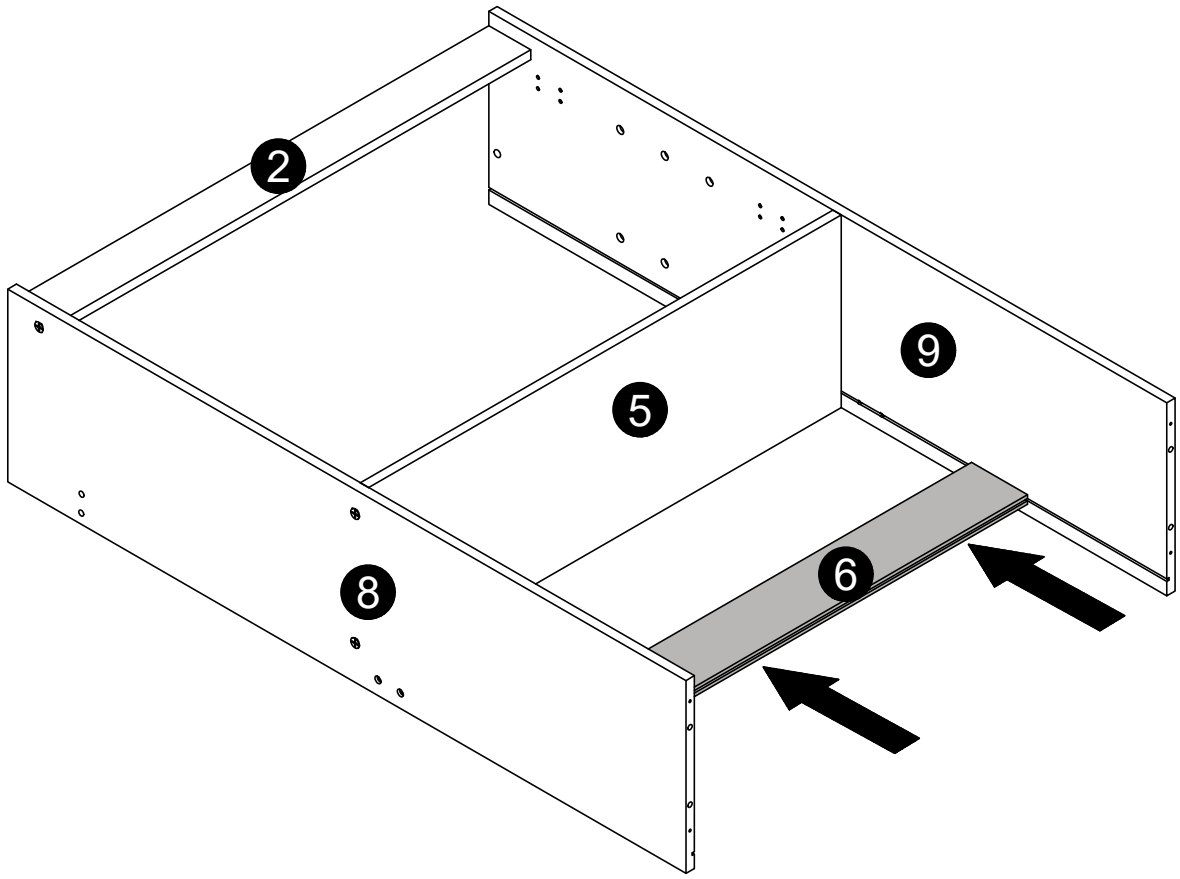

Step 15

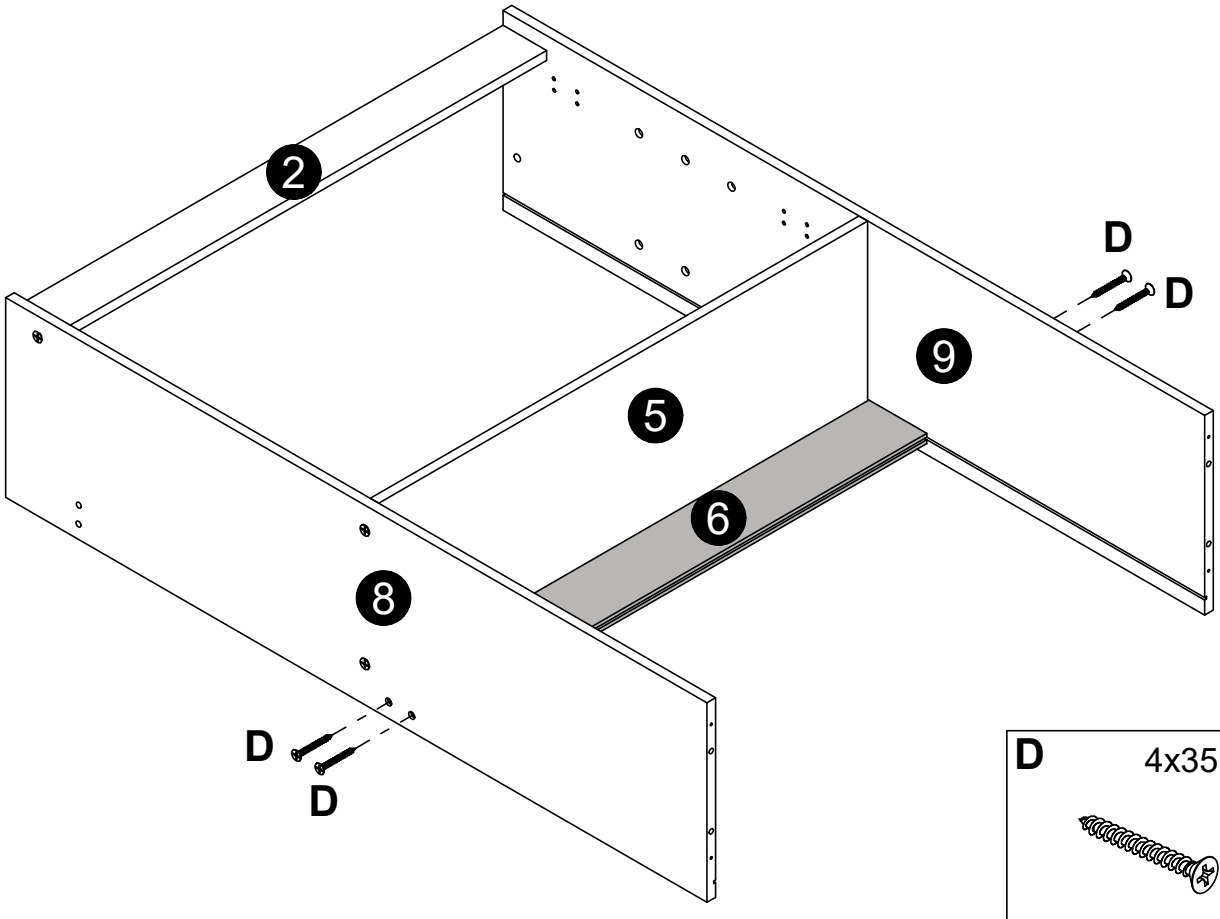

D 4x35mm

x4

Step 16

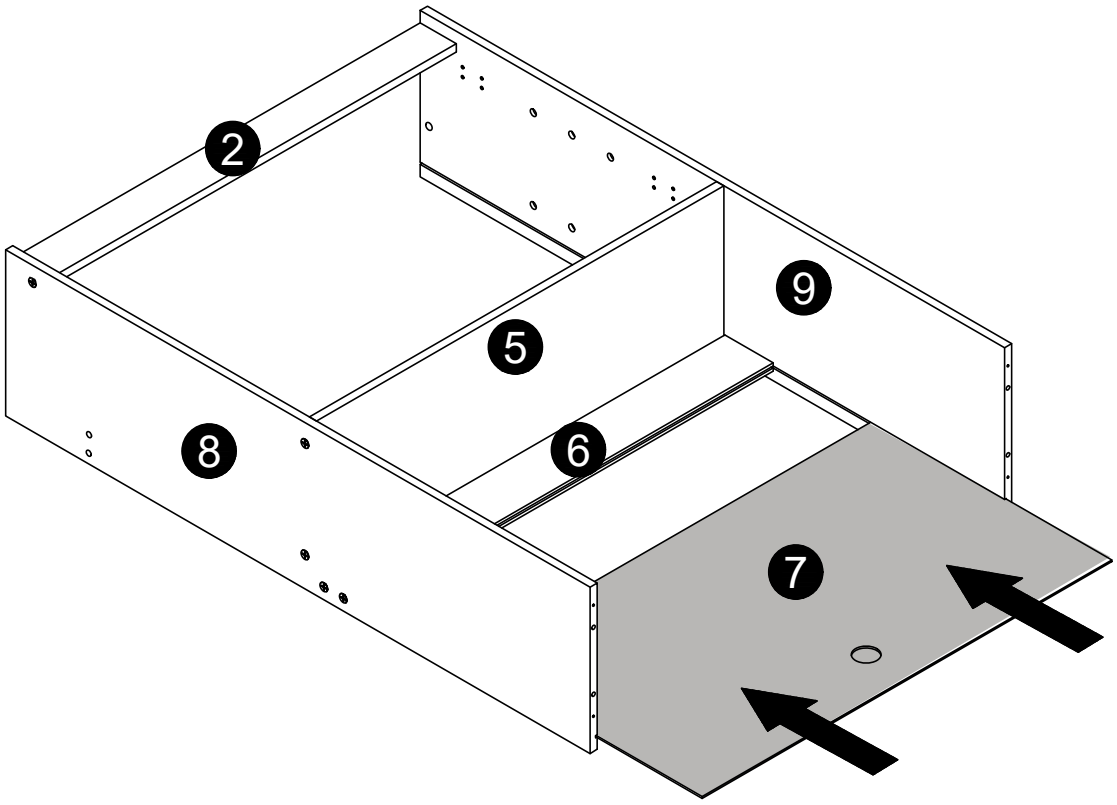

Step 17

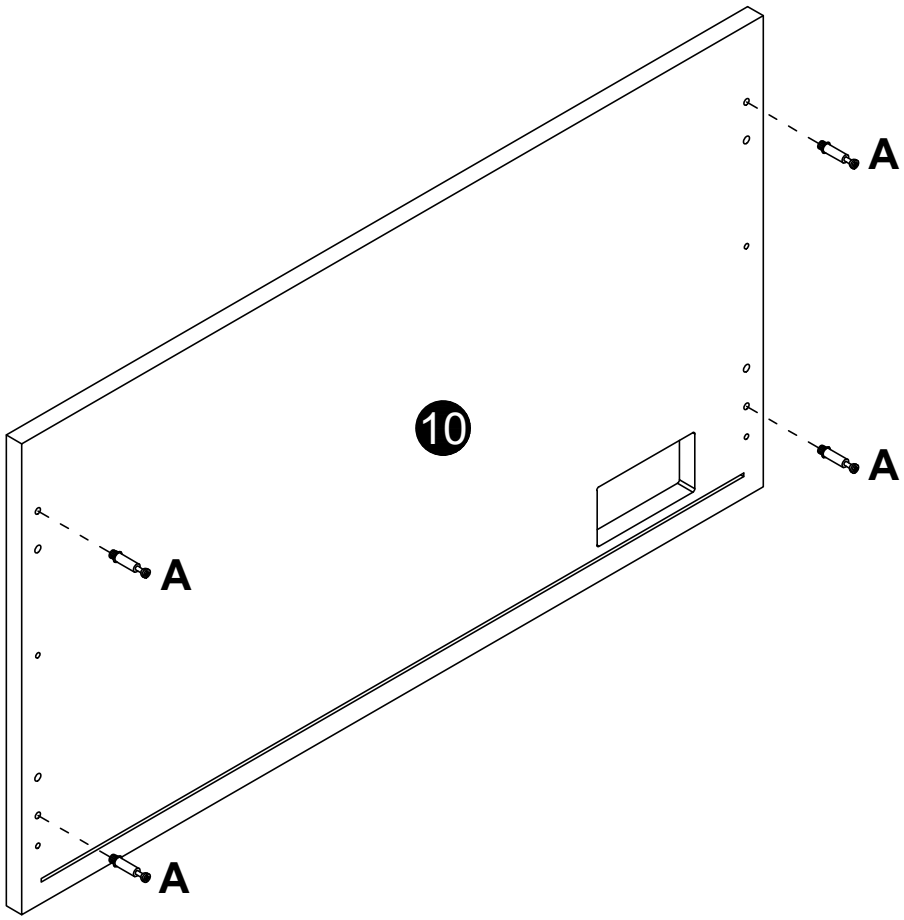

A 6x35mm

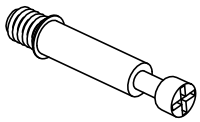

x4

Step 18

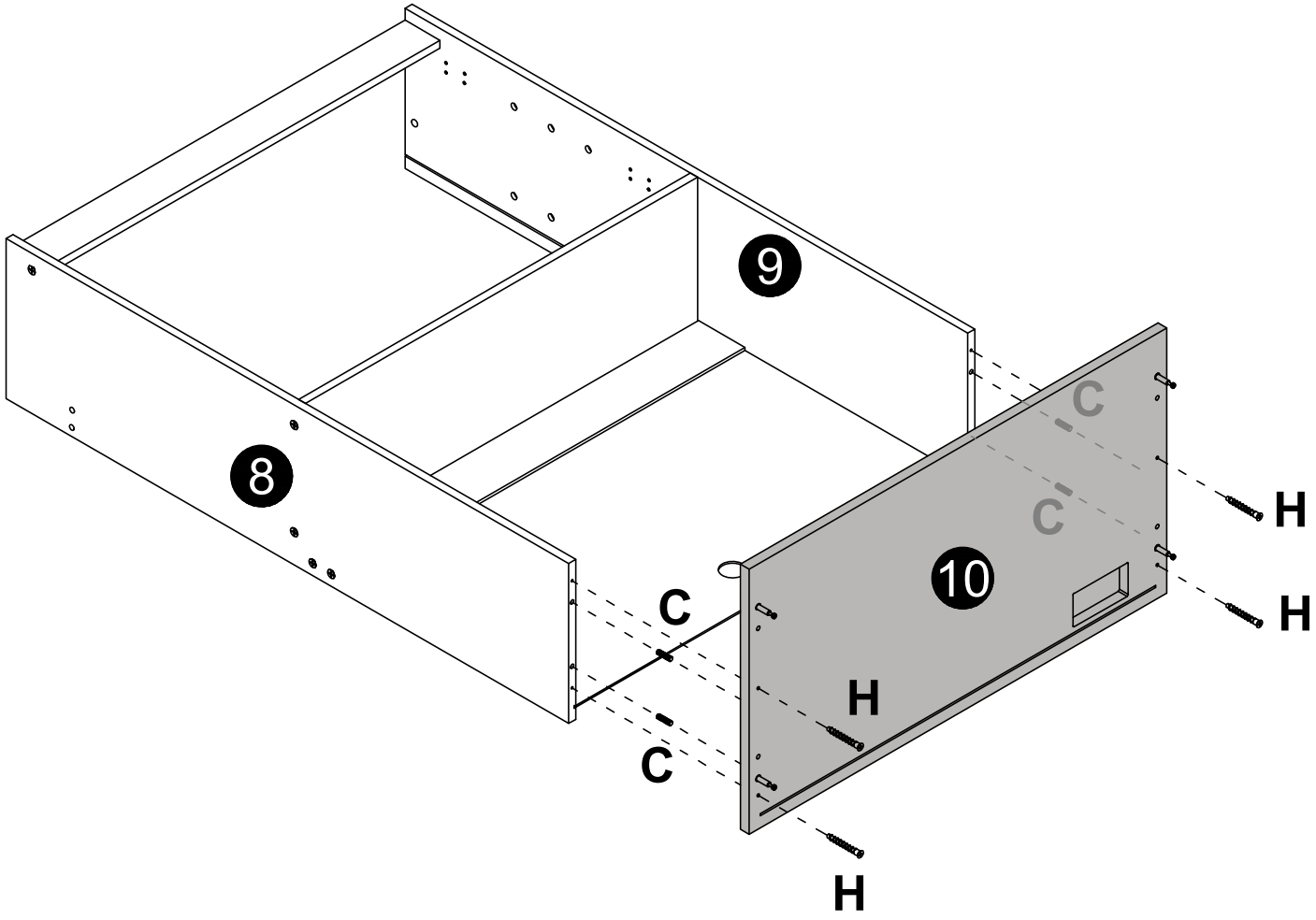

C	6x30mm	H	5x35mm
	x4		x4

Step 19

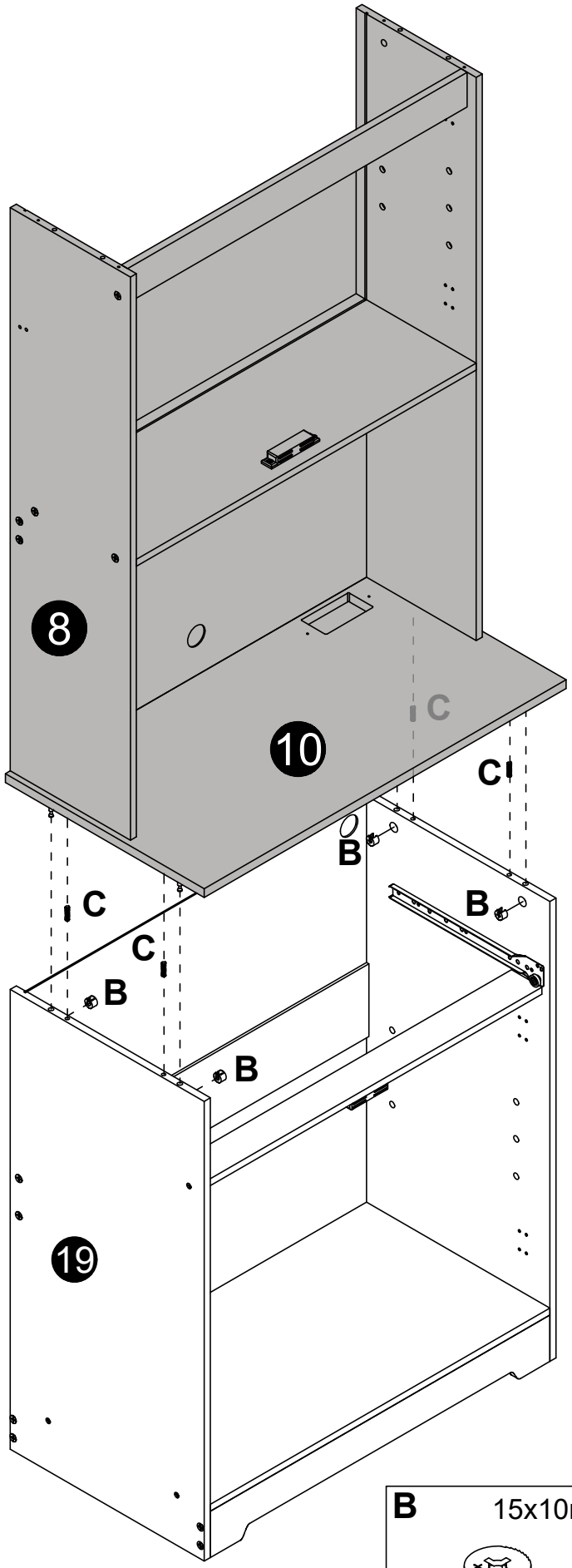

B	15x10mm	C	6x30mm
	x4		x4

Step 20

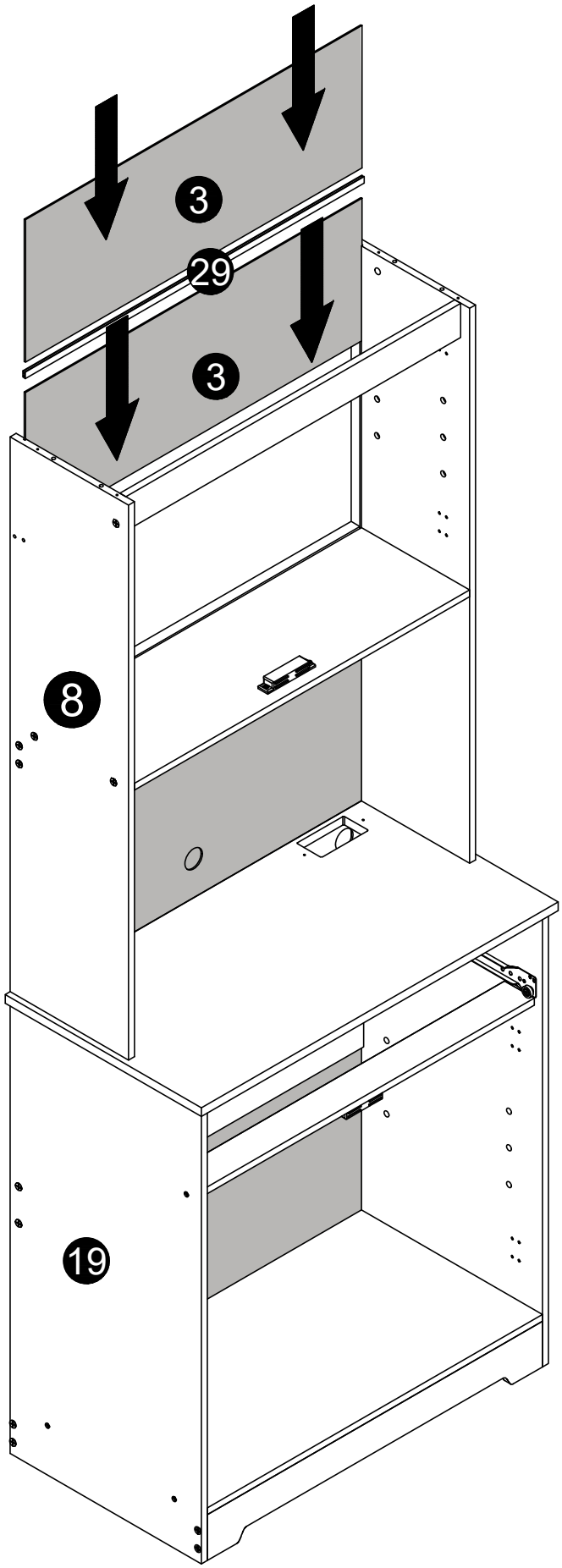

Step 21

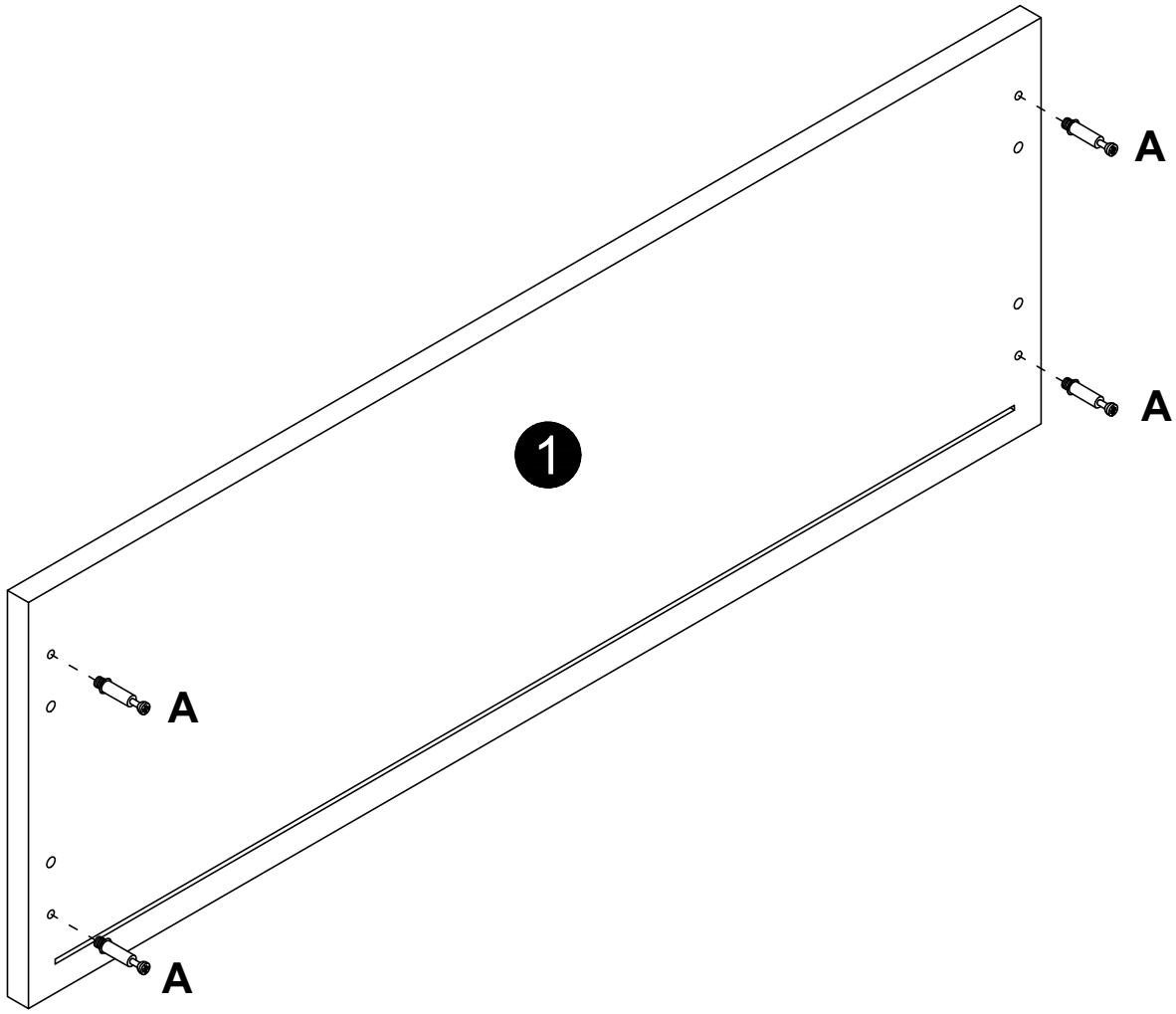

A	6x35mm
	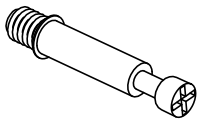
	x4

Step 22

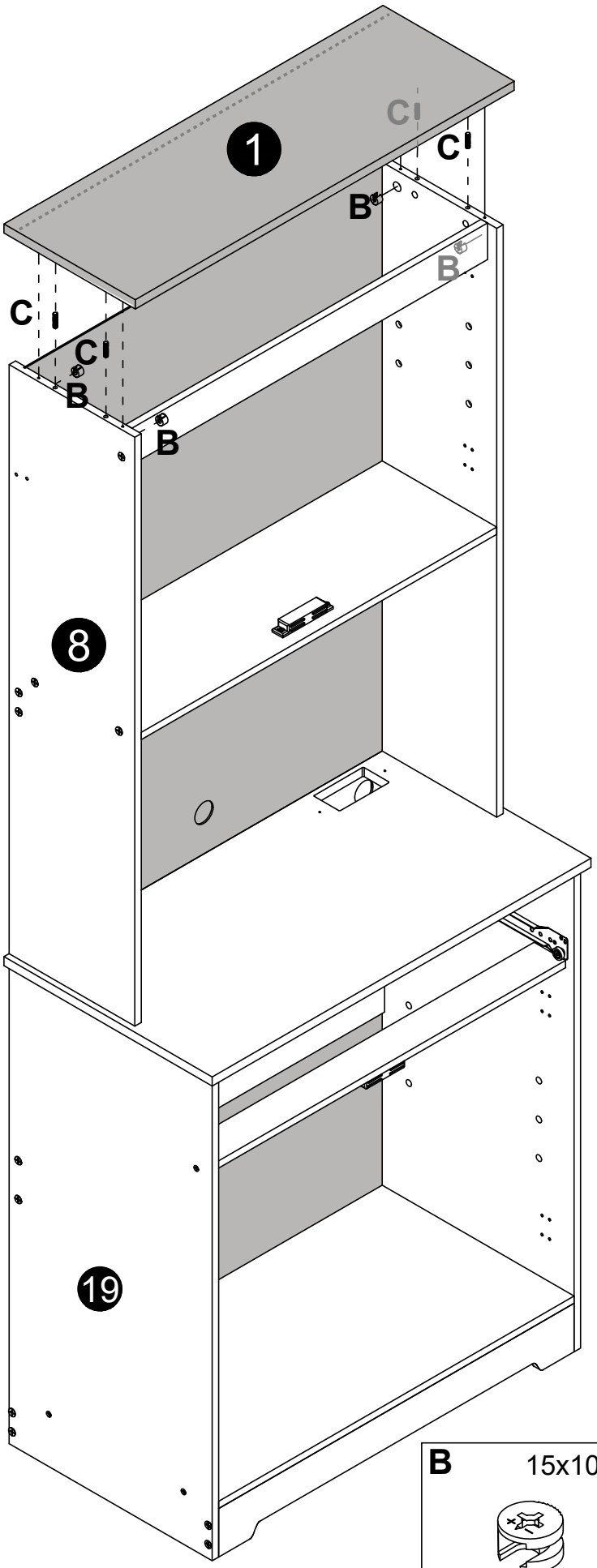

B	15x10mm	C	6x30mm
	x4		x4

Step 23

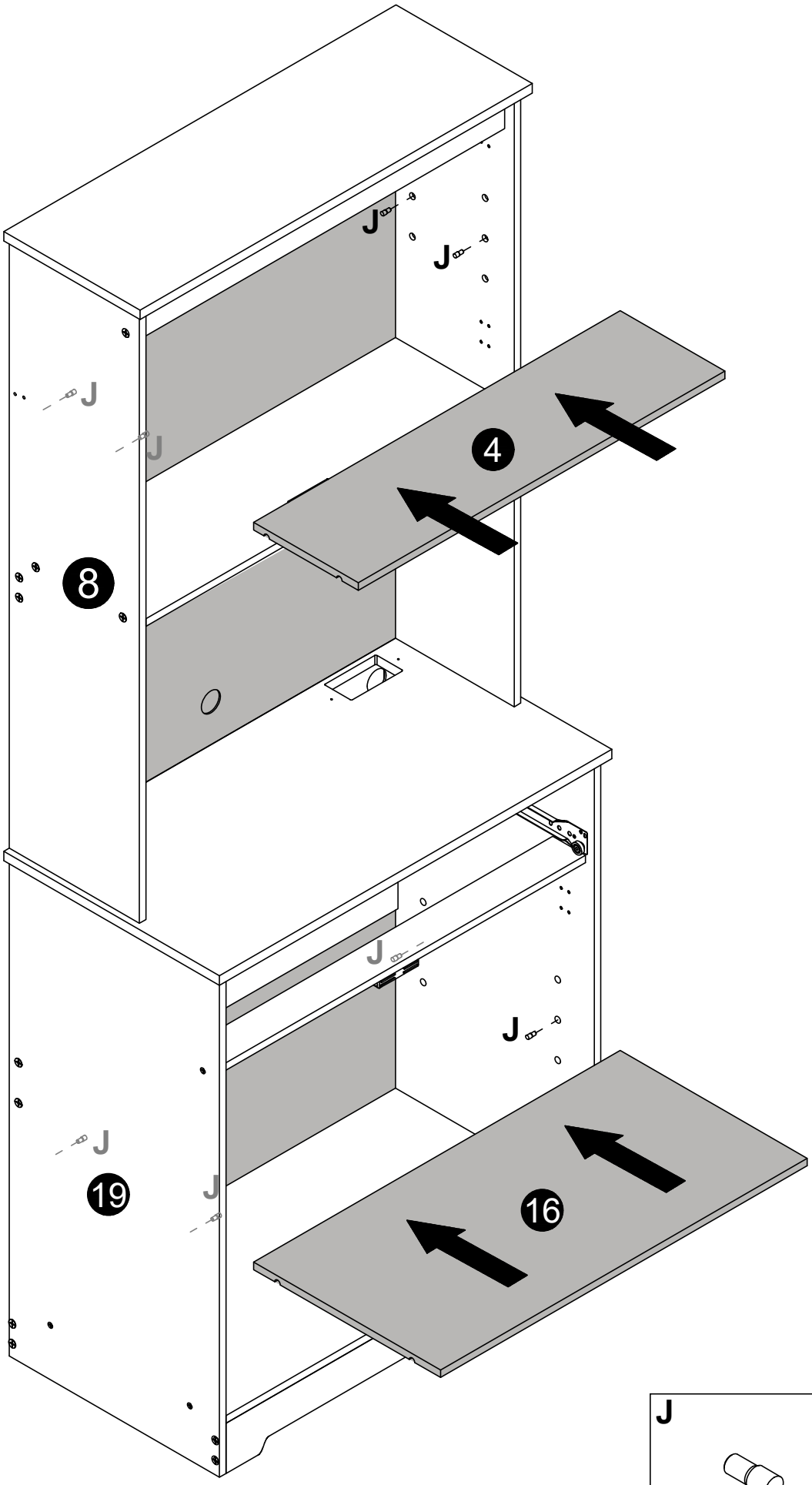

J

x8

Step 24

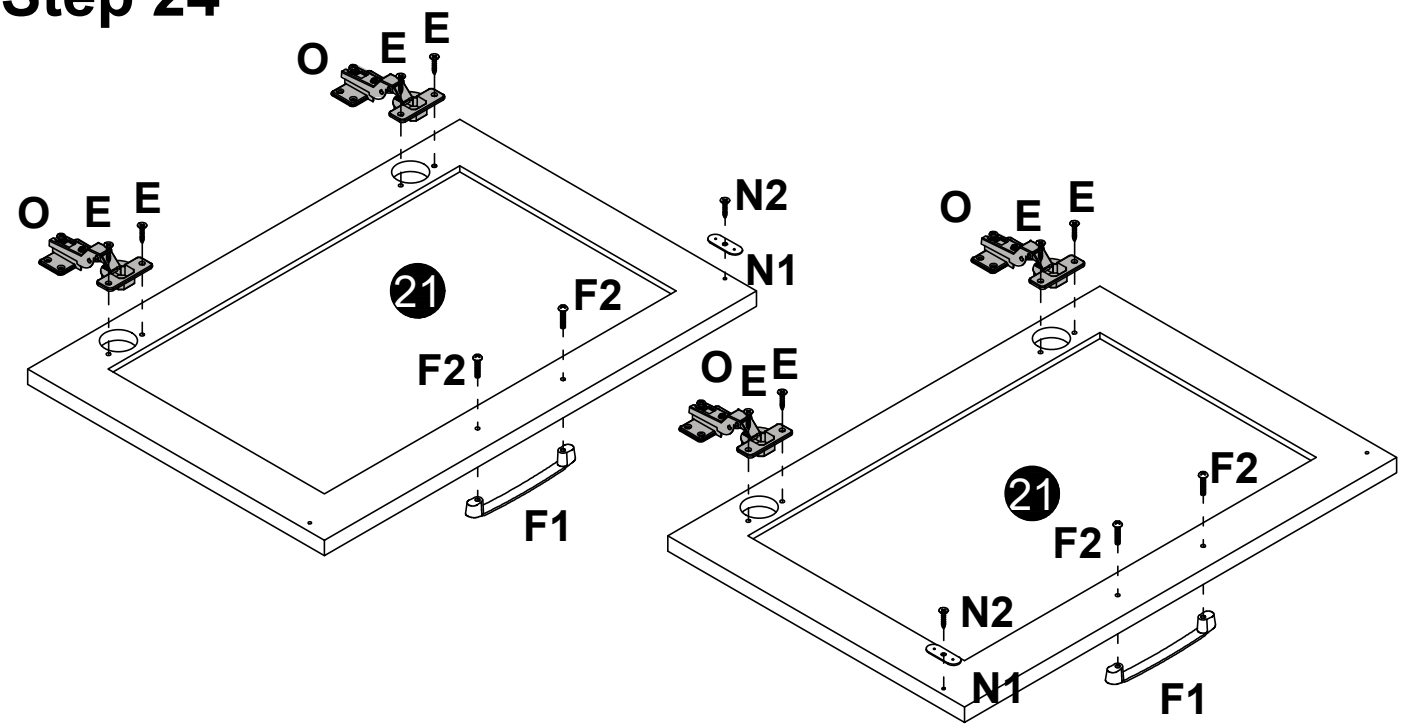

E	F	N	O
3.5x12mm	4x18mm	3x12mm	
	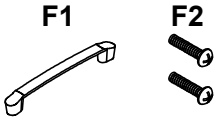	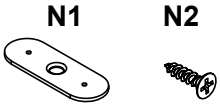	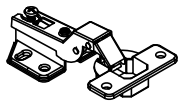
x8	x2	x2	x4

Step 25

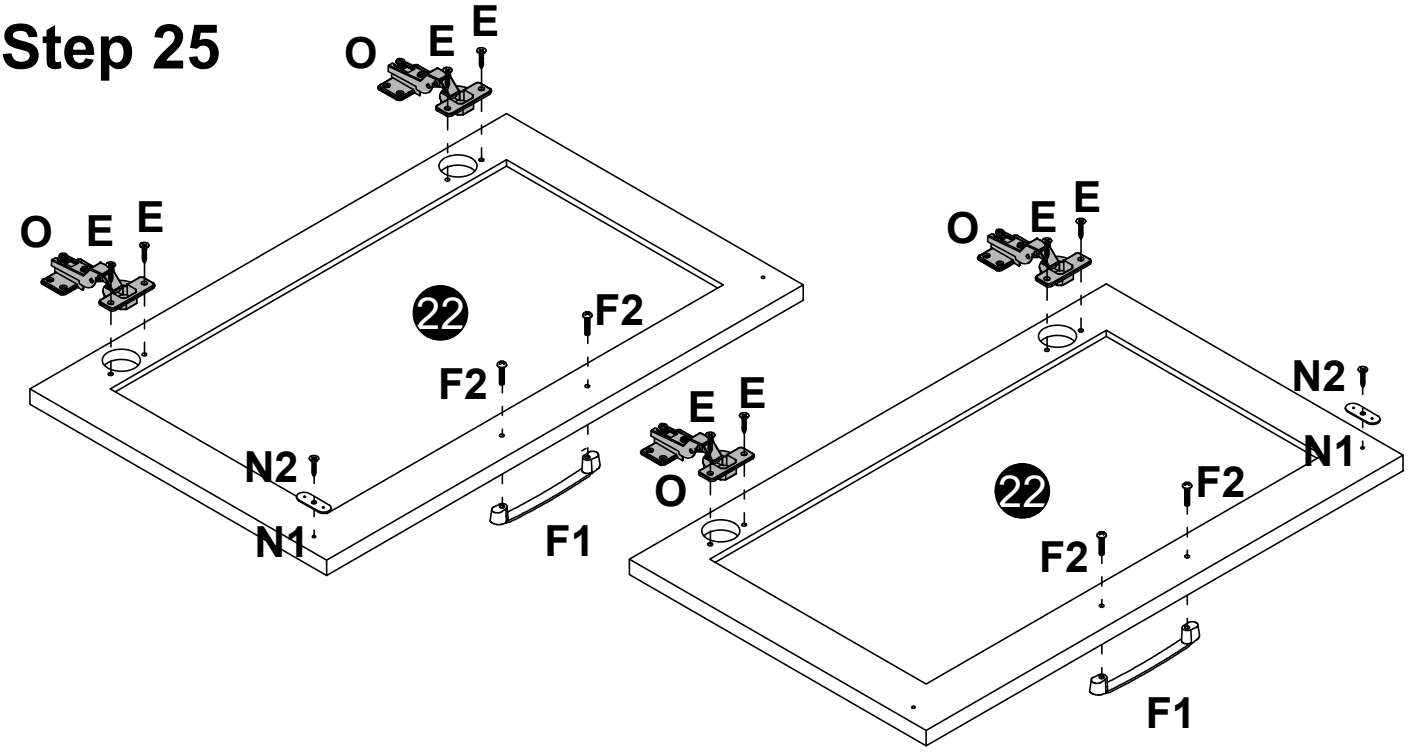

E	F	N	O
3.5x12mm	4x18mm	3x12mm	
	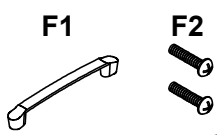	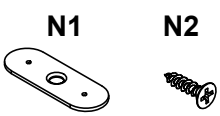	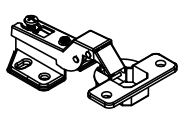
x8	x2	x2	x4

Step 26

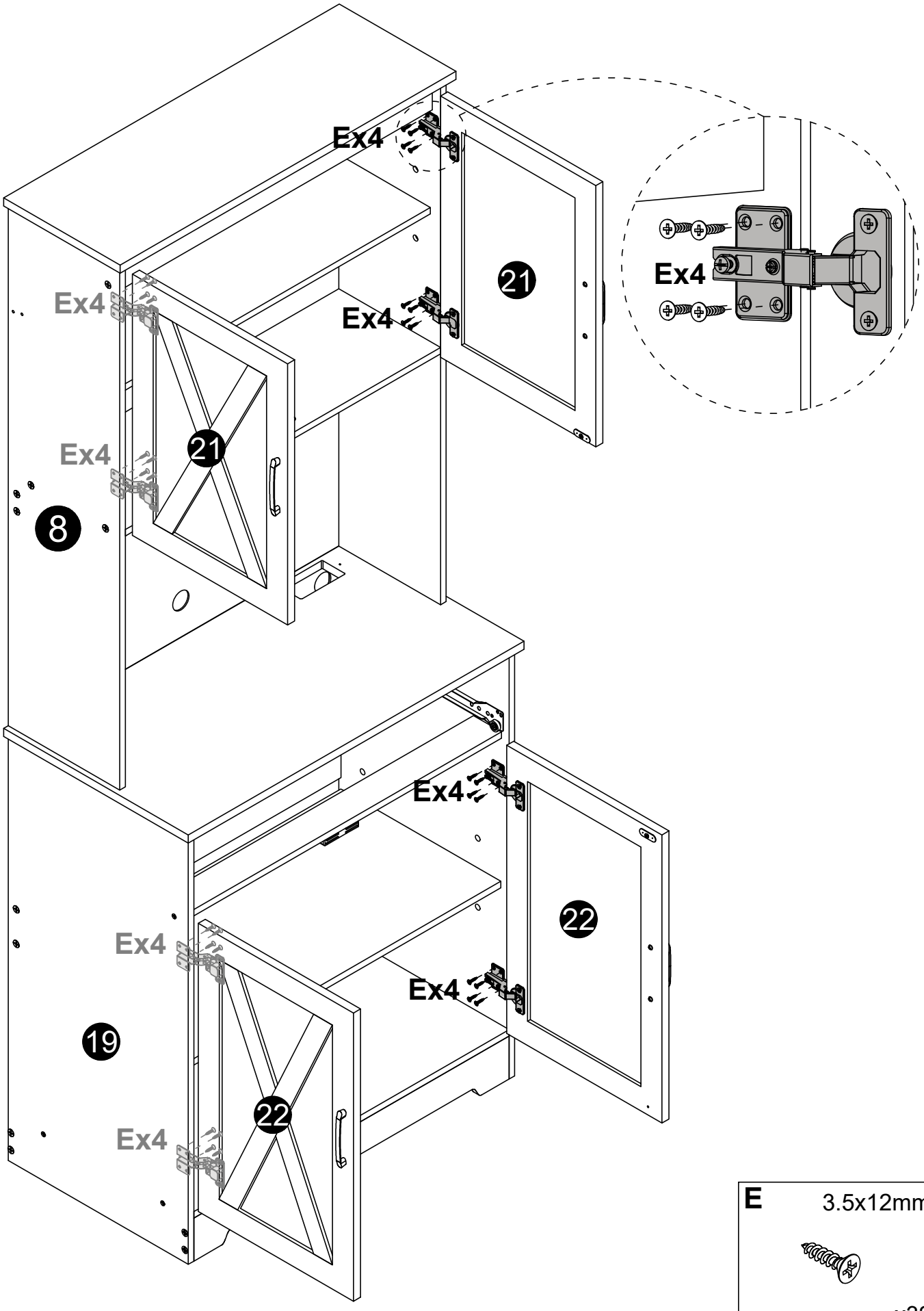

E	3.5x12mm
	x32

Step 27

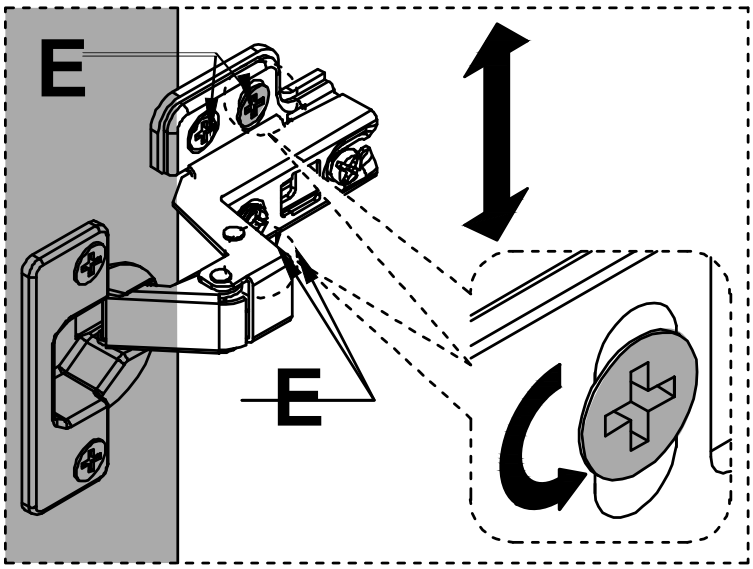

1.

To adjust the vertical height.
Loosen the four screws "E" on both hinges.
Two of them are usually in slotted holes which allows you to adjust up or down by a few mm. Then tighten back up.

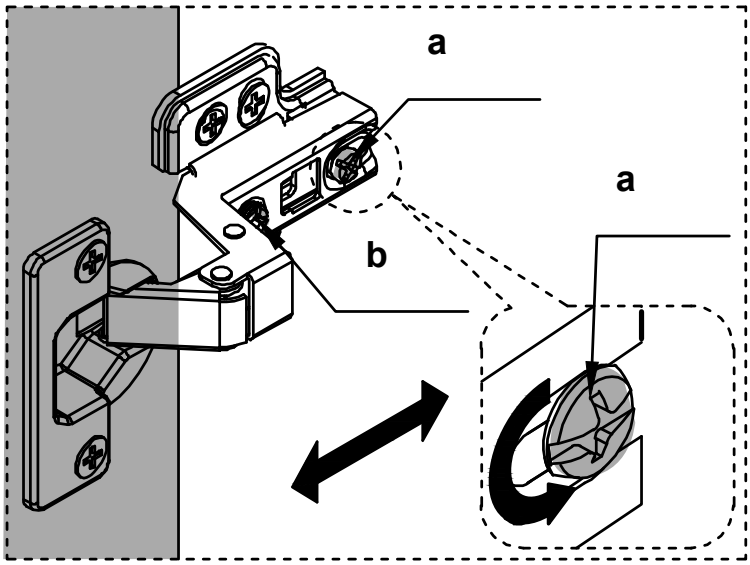

2.

To adjust depth.
Loosen screw "a" and adjust the door, if the door can not be adjusted, please loosen screw "b", then try again.
Tighten screw "a" and "b".

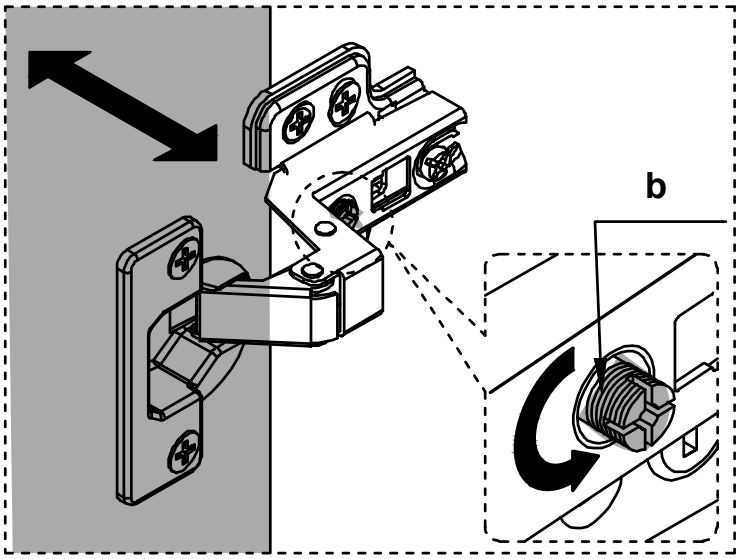

3.

To adjust sideways.
Turning the screw "b" on both hinges on each door.

Step 28

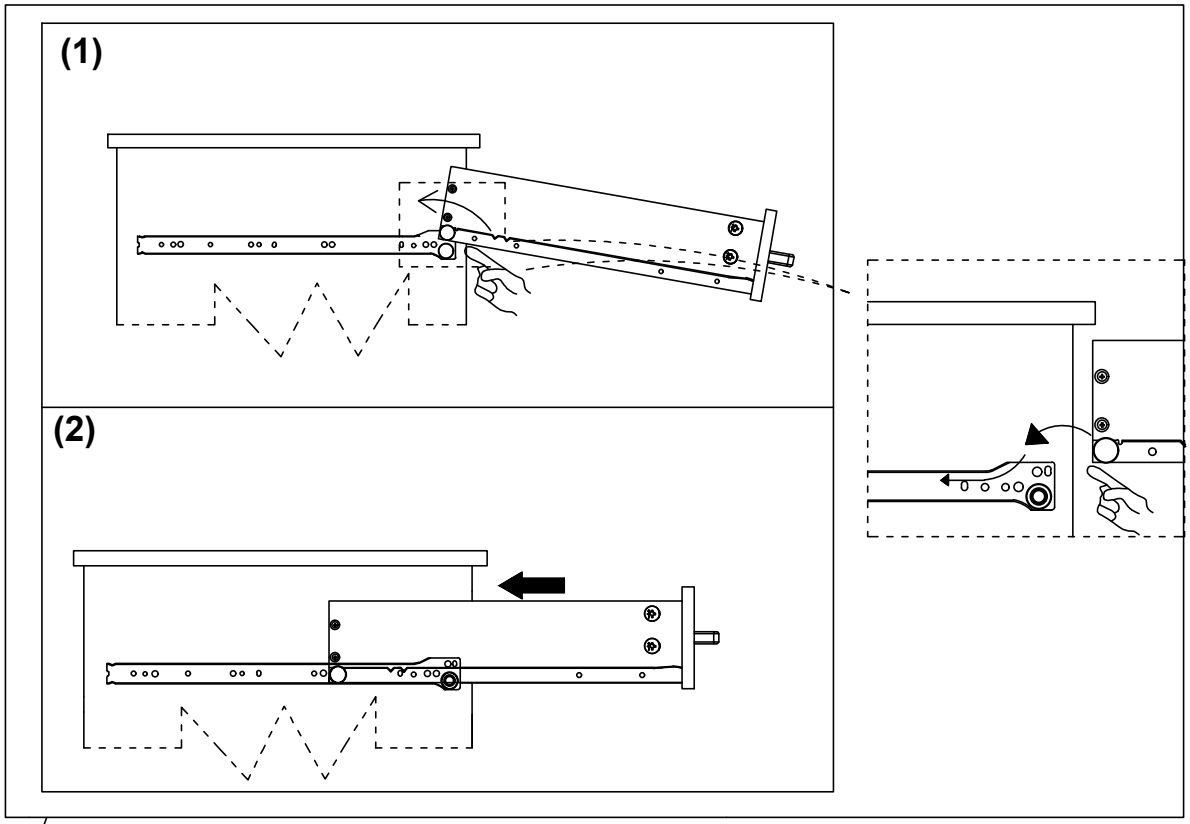

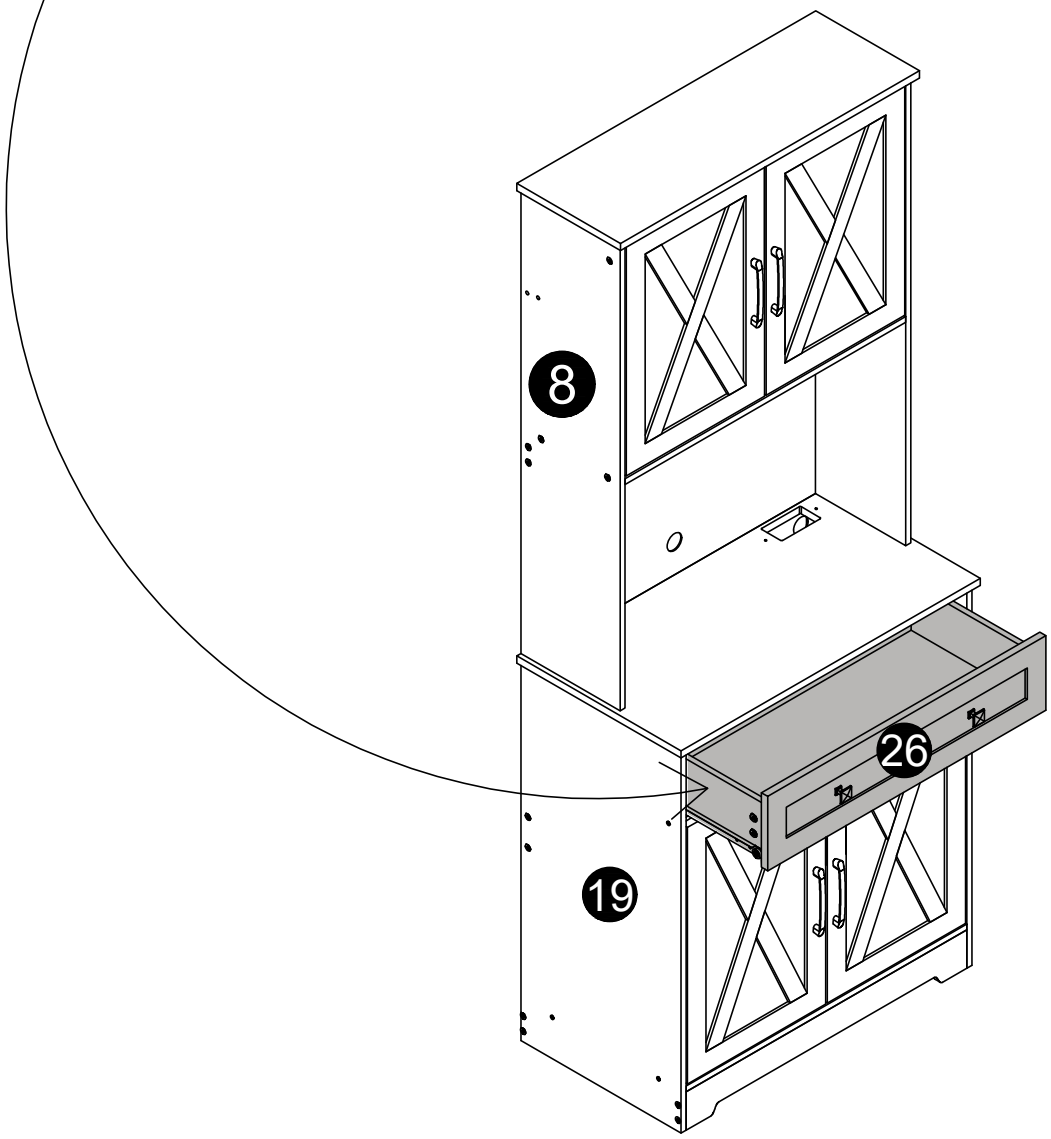

Step 29

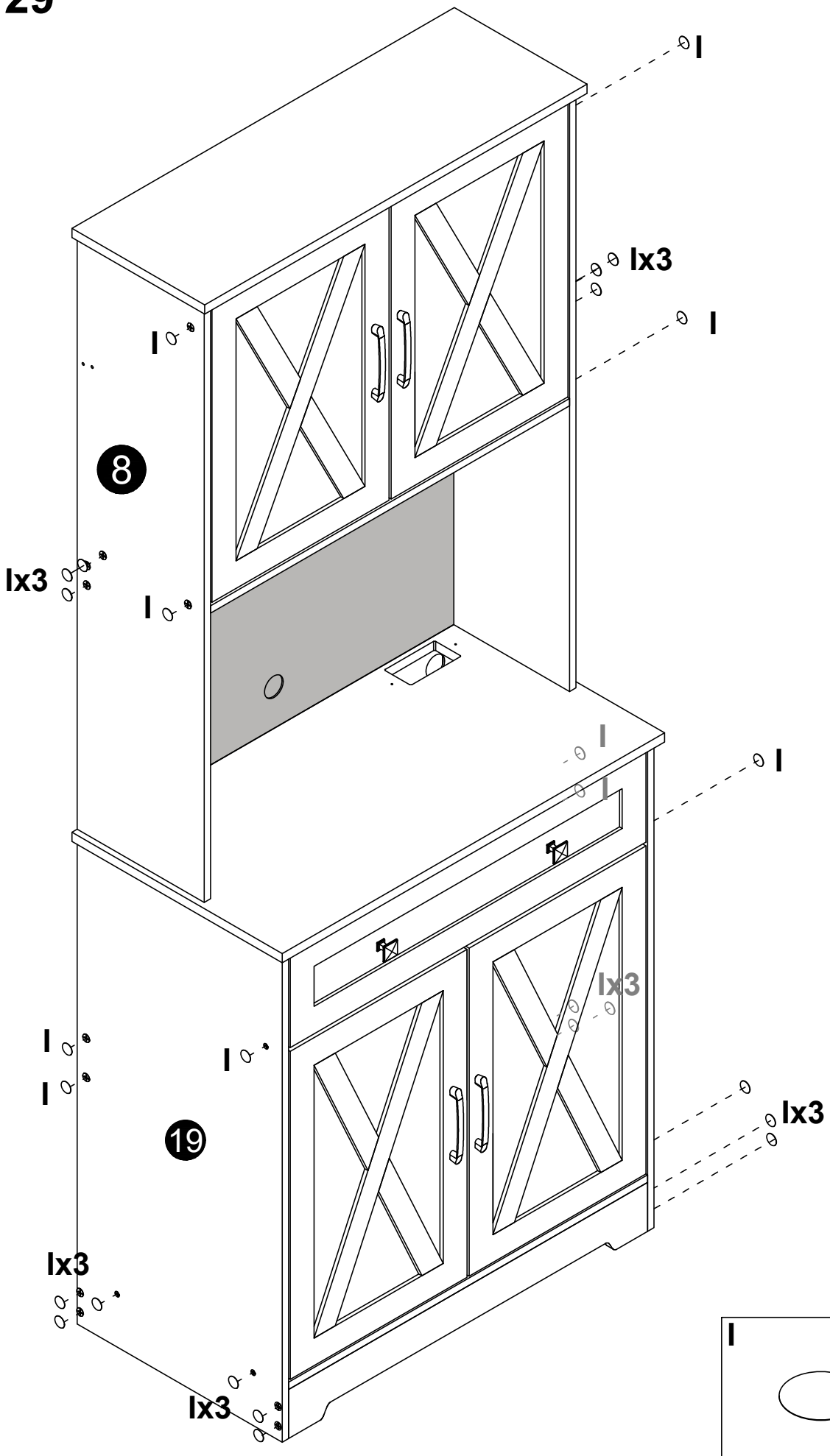

I 18mm

x28

Step 30

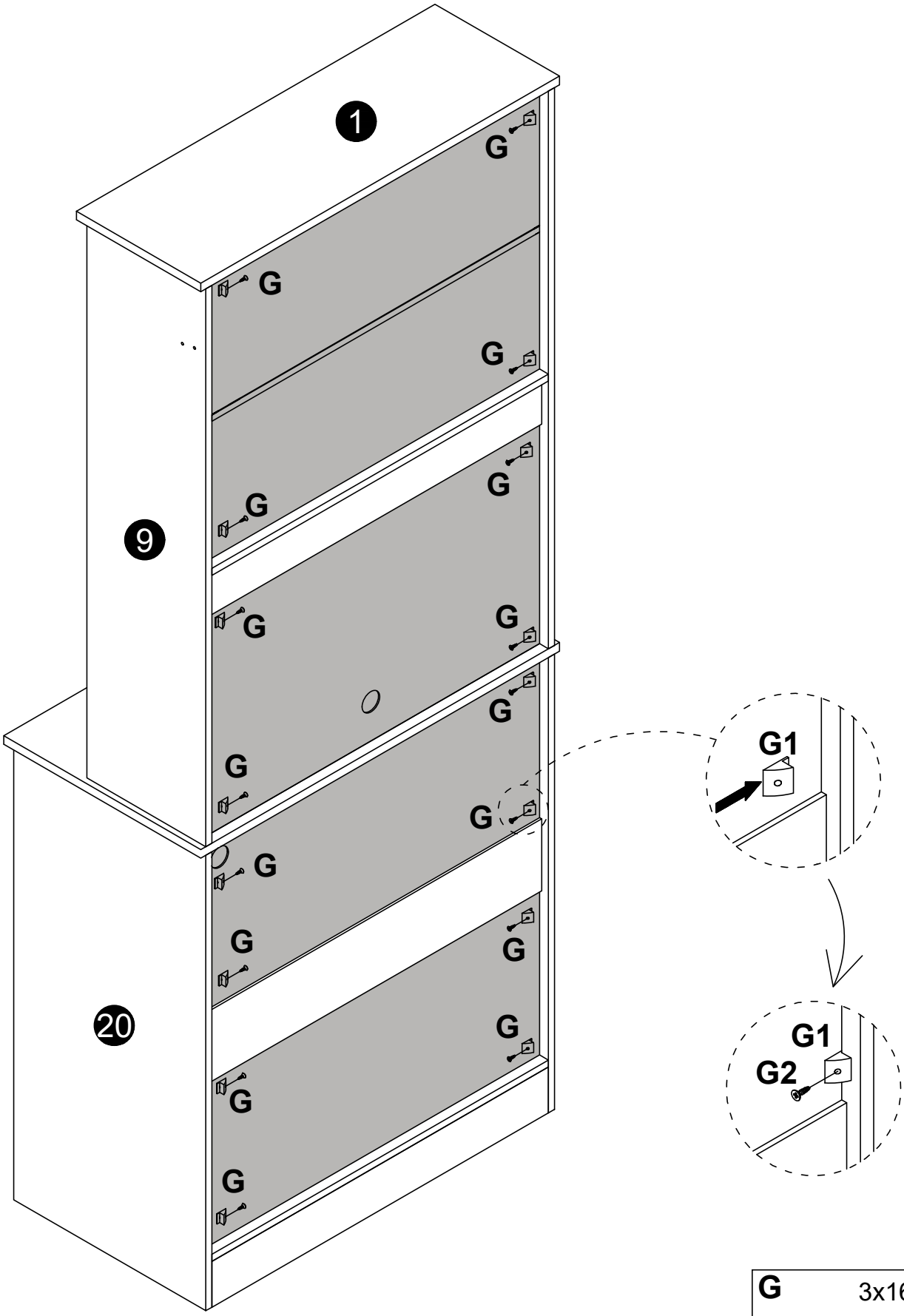

G	3x16mm
G1	G2
	x16

Step 31

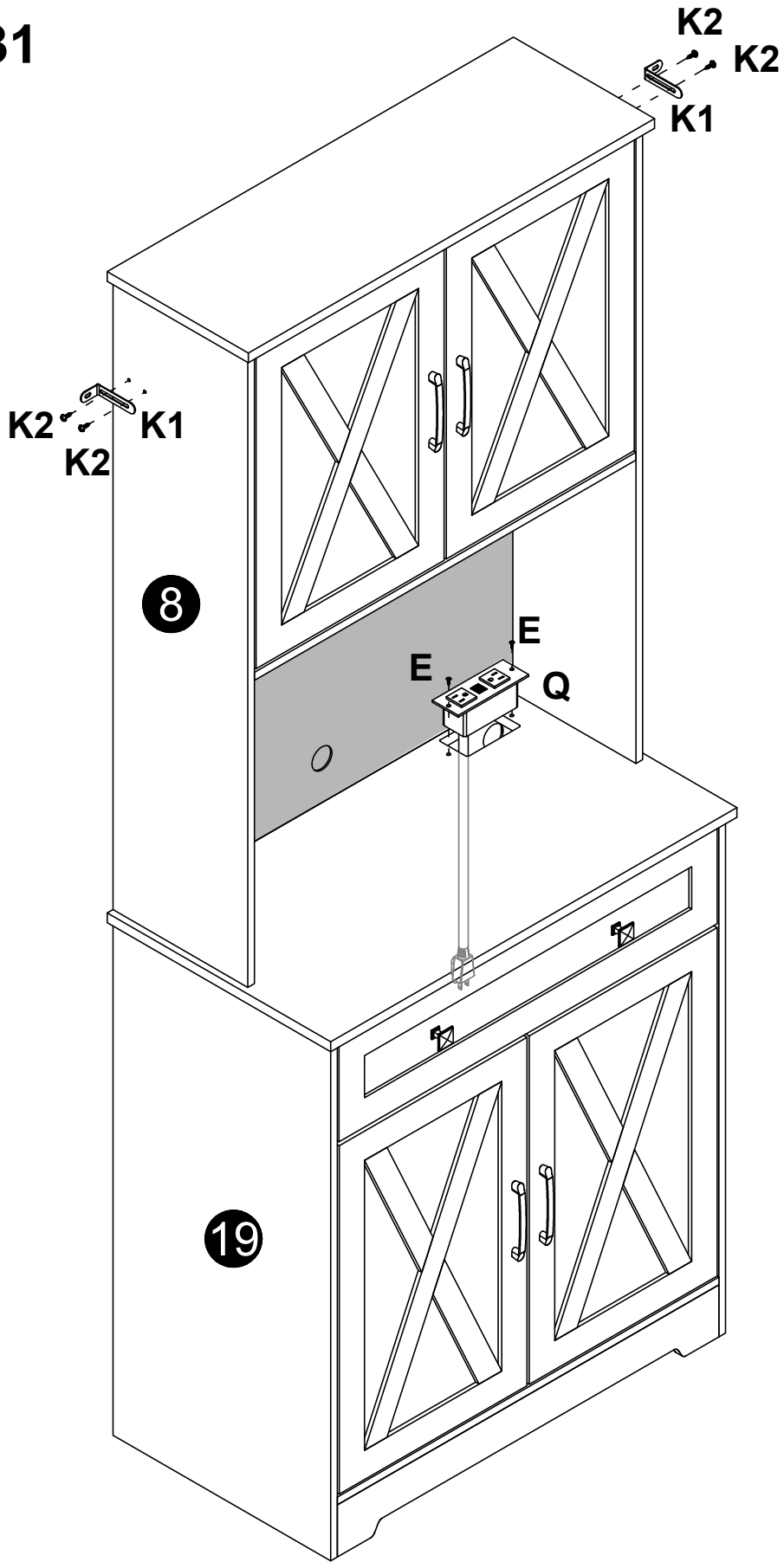

E	3.5x12mm	K	4x14mm	Q	
	x2	K1 K2	x2		x1

Step 32

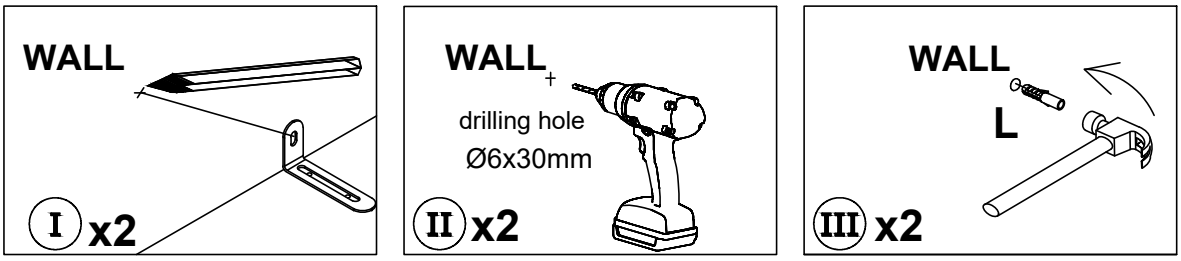

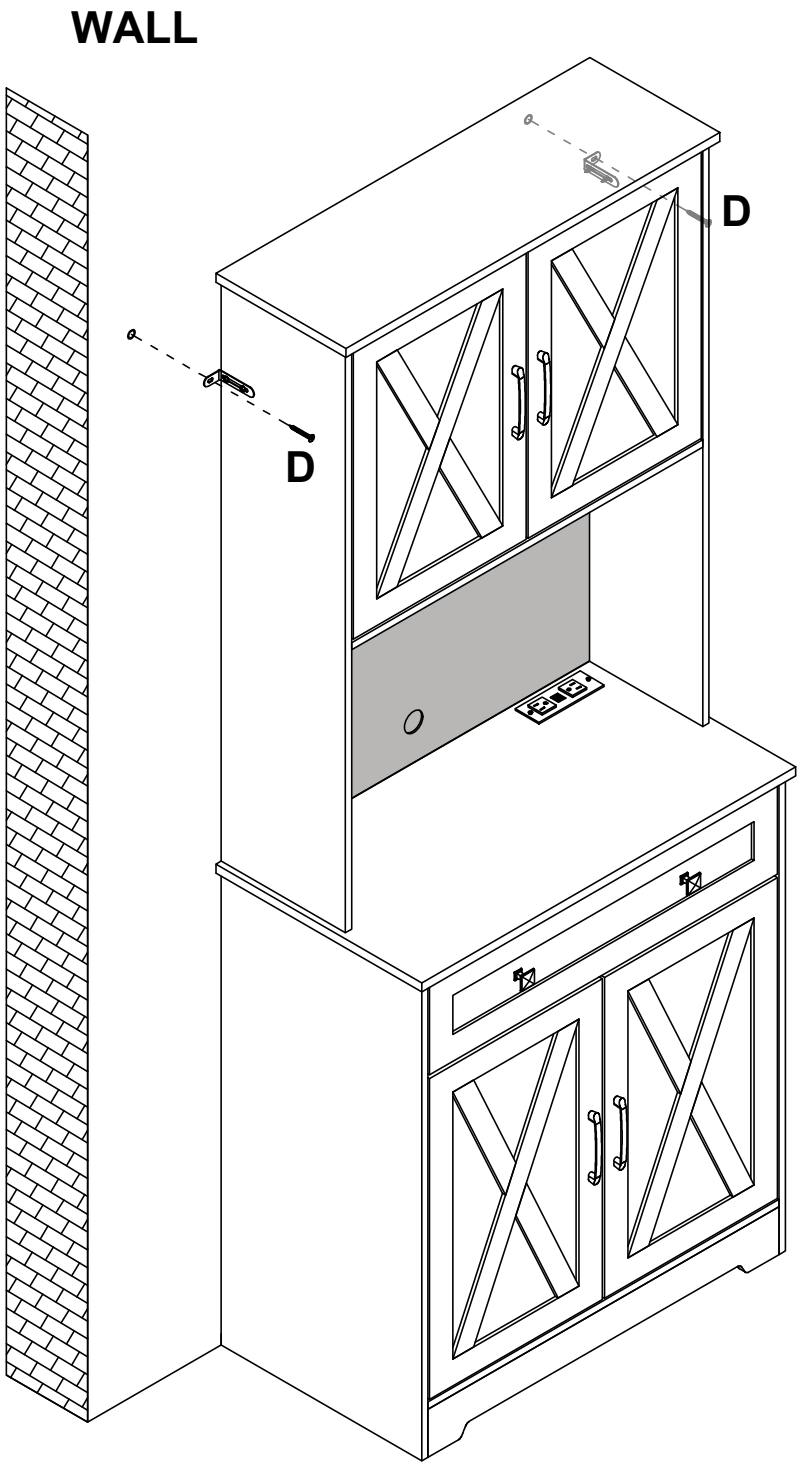

D 4x35mm

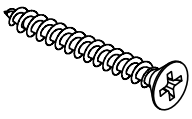

x2

L 6x30mm

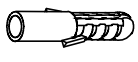

x2

GARVEE

support@garvee.com