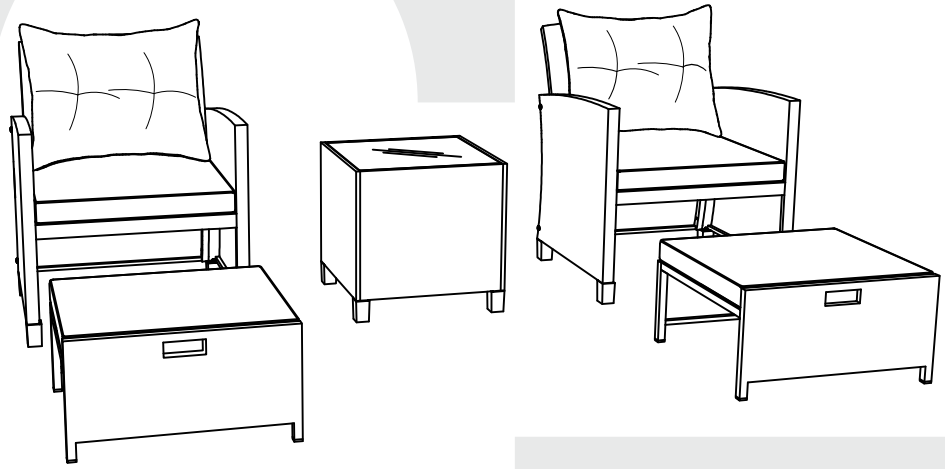

Outdoor Patio Furniture Set

HW75218

USA office: Fontana **AUS** office: Truganina
GBR office: FDS Corporation Limited, Unit 4, Blackacre Road, Great Blakenham, Ipswich, IP6 0FL, United Kingdom

THIS INSTRUCTION BOOKLET CONTAINS **IMPORTANT** SAFETY INFORMATION.
PLEASE READ AND KEEP FOR FUTURE REFERENCE.

Before You Start

- ⚠ Please read all instructions carefully.
- ⚠ Retain instructions for future reference.
- ⚠ Separate and count all parts and hardware.
- ⚠ Read through each step carefully and follow the proper order.
- ⚠ We recommend that, where possible, all items are assembled near to the area in which they will be placed in use, to avoid moving the product unnecessarily once assembled.
- ⚠ Always place the product on a flat, steady and stable surface.
- ⚠ Keep all small parts and packaging materials for this product away from babies and children as they potentially pose a serious choking hazard.

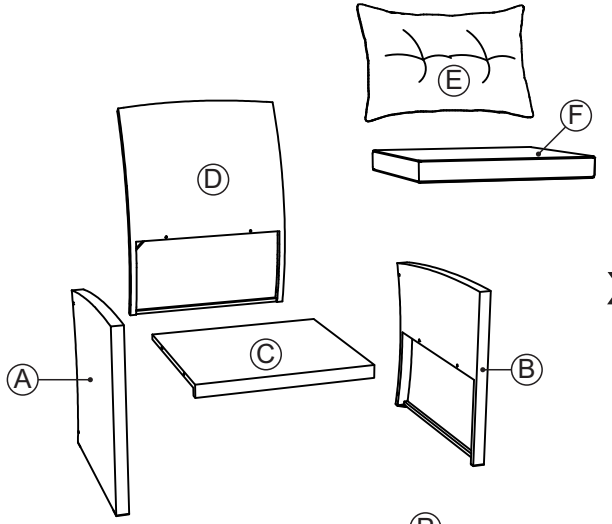

x2

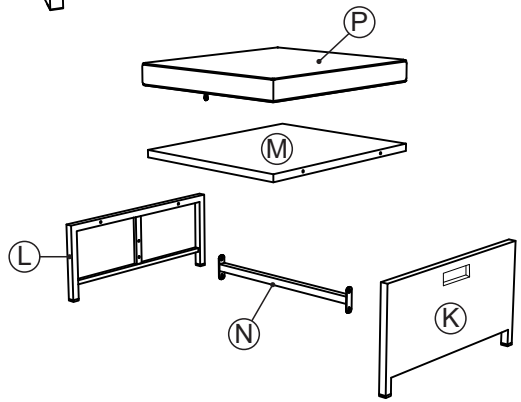

x2

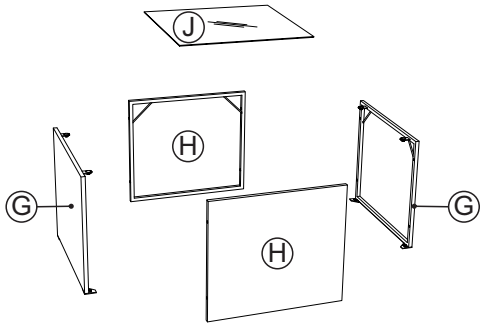

x1

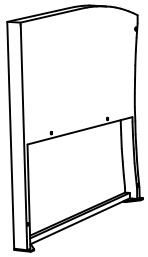

Ⓐ ×2

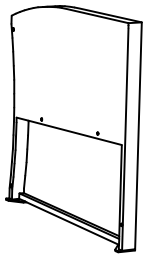

Ⓑ ×2

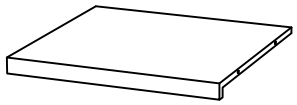

Ⓒ ×2

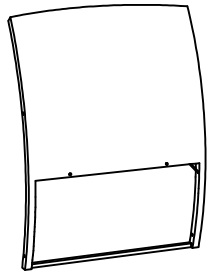

Ⓓ ×2

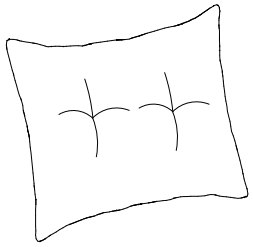

Ⓔ ×2

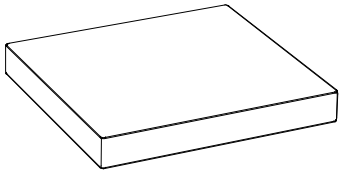

Ⓕ ×2

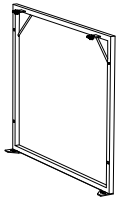

Ⓖ ×2

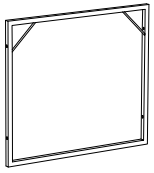

Ⓗ ×2

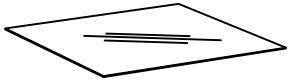

410x410x5 mm

Ⓙ ×1

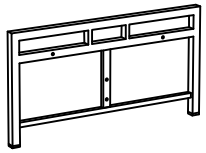

Ⓚ ×2

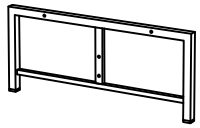

Ⓛ ×2

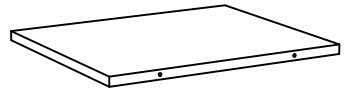

Ⓜ ×2

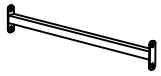

Ⓝ ×2

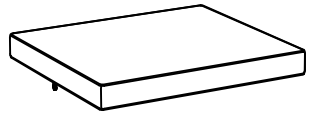

Ⓟ ×2

M6x15 mm

①	x8



M6x25 mm

②	x8

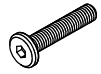

M6x40 mm

③	x20

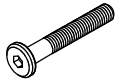

M6x55 mm

④	x20



Ø6x14x1mm

⑤	x44



40x40x65 mm

⑥	x12

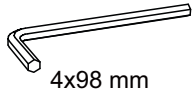

4x98 mm

⑦	x2

Allen Key

1

x2

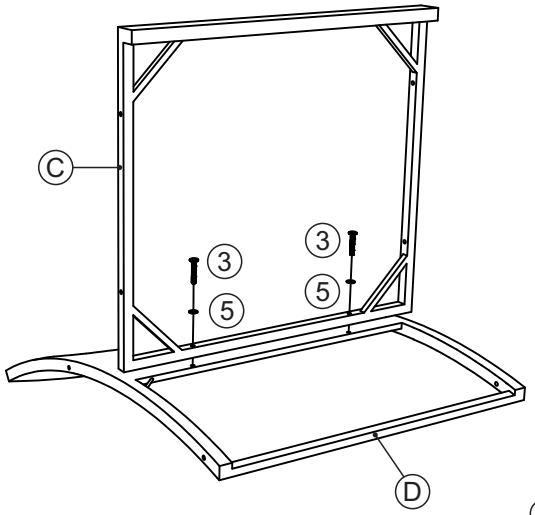



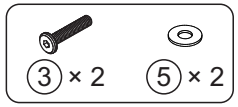

2

x2

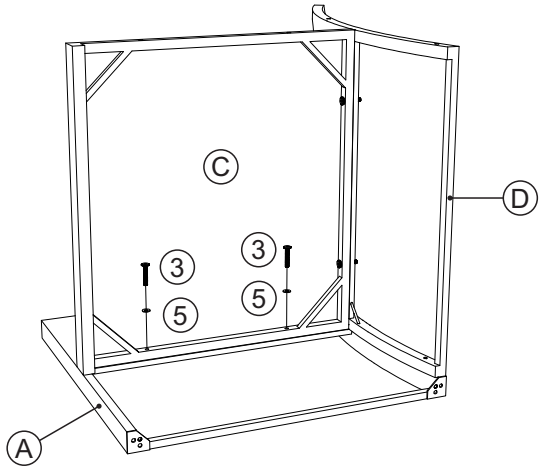

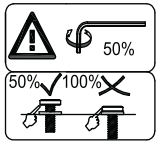

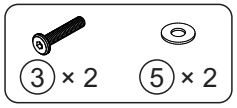

3

x2

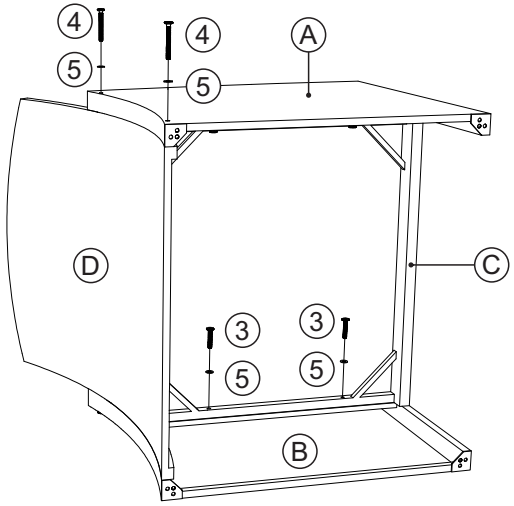

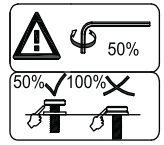

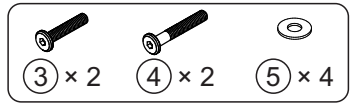

4

x2

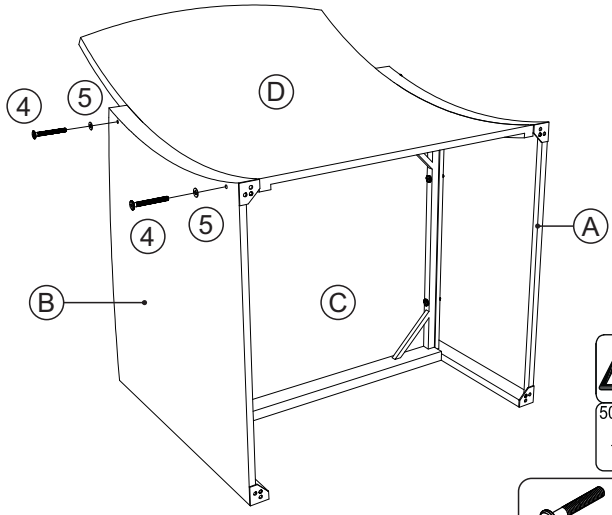

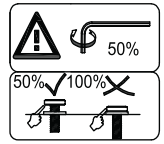

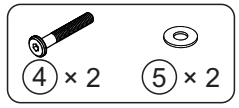

5 x2

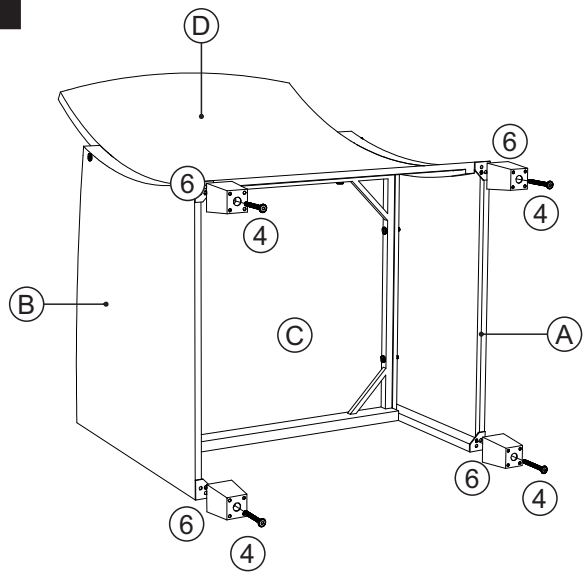

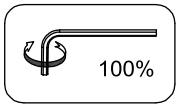

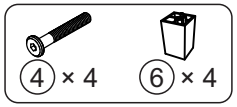

6 x2

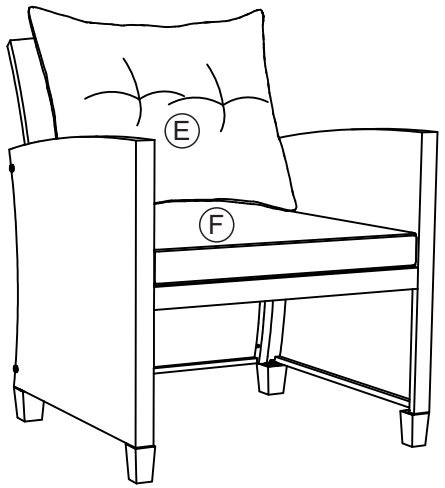

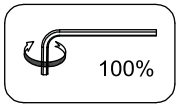

7 x2

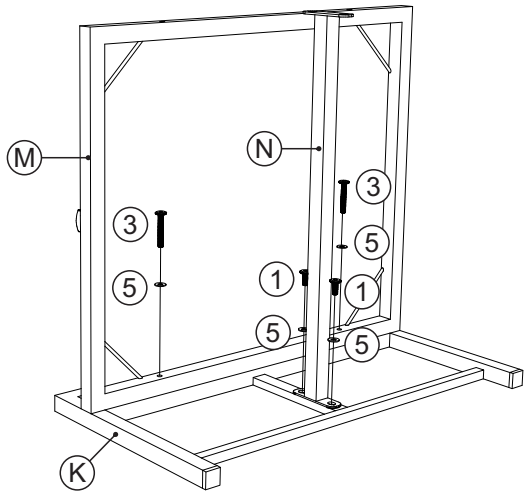

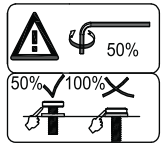

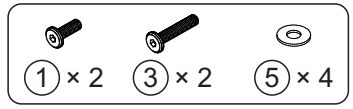

8 x2

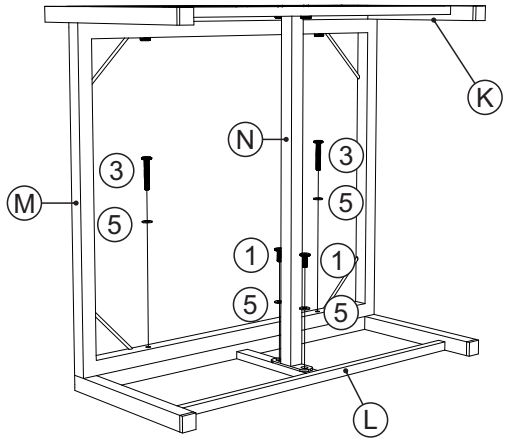

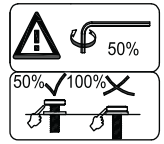

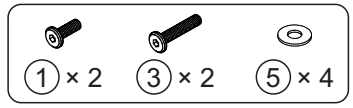

9

x2

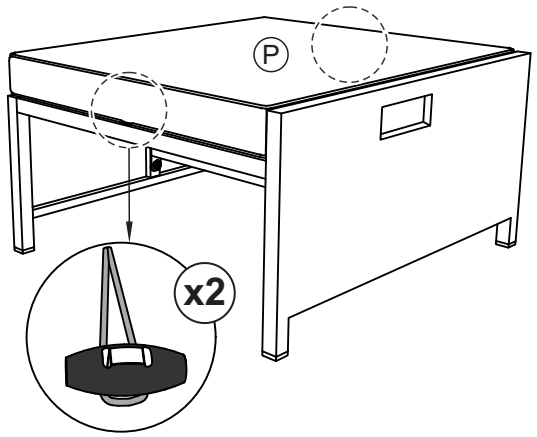
P
x2

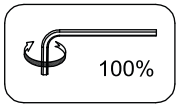
100%

10

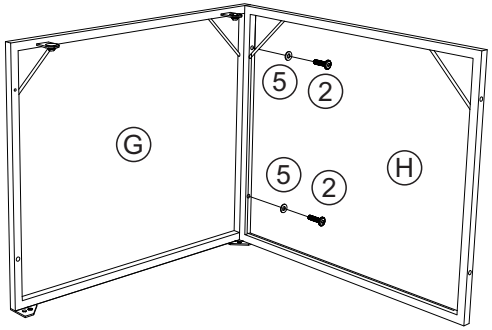
G
H
5
2
5
2

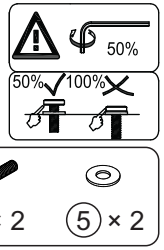
50%
50%
100%
2 × 2
5 × 2

11

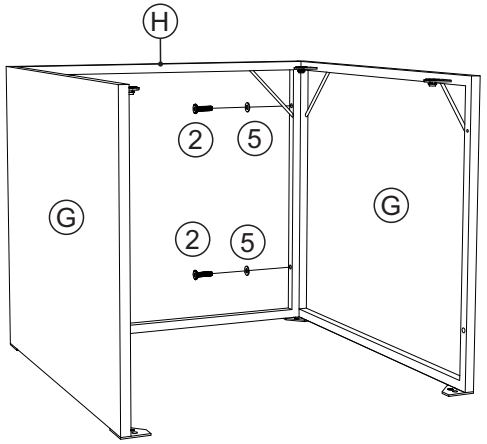
H
G
G
2
5
2
5

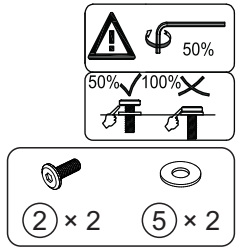
50%
50%
100%
2 × 2
5 × 2

12

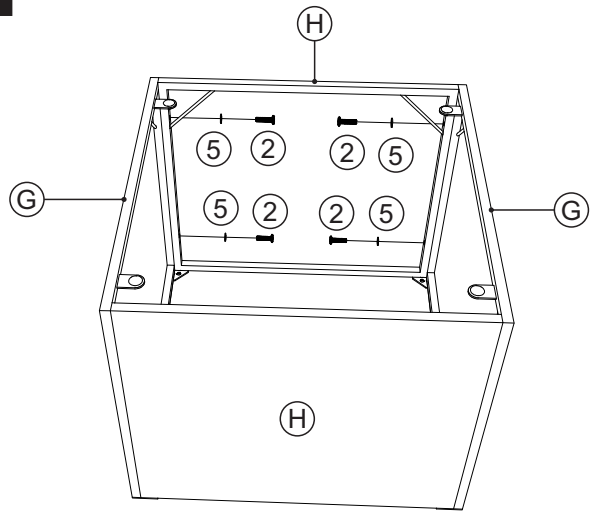
H
G
G
5
2
2
5
5
2
2
5
H

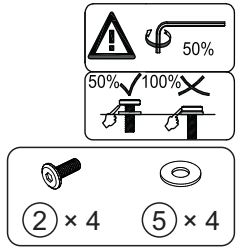
50%
50%
100%
2 × 4
5 × 4

13

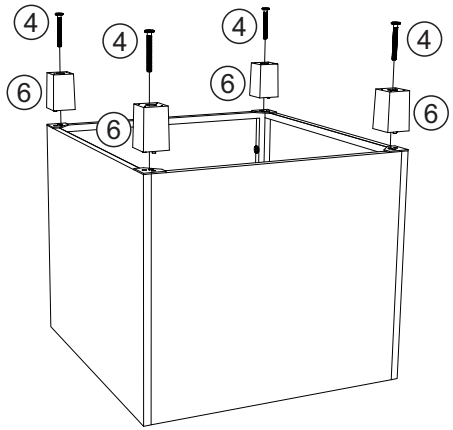

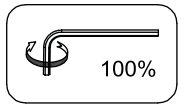

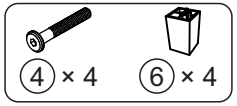

14

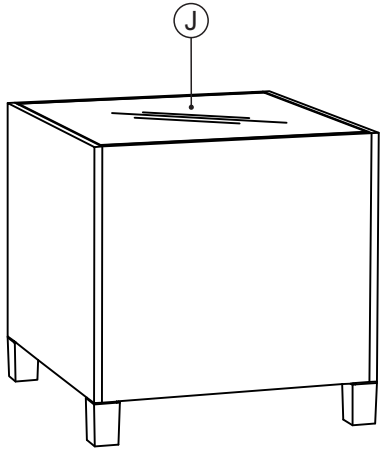

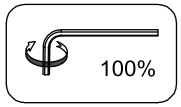

FINISH

15

