Assembly Instructions

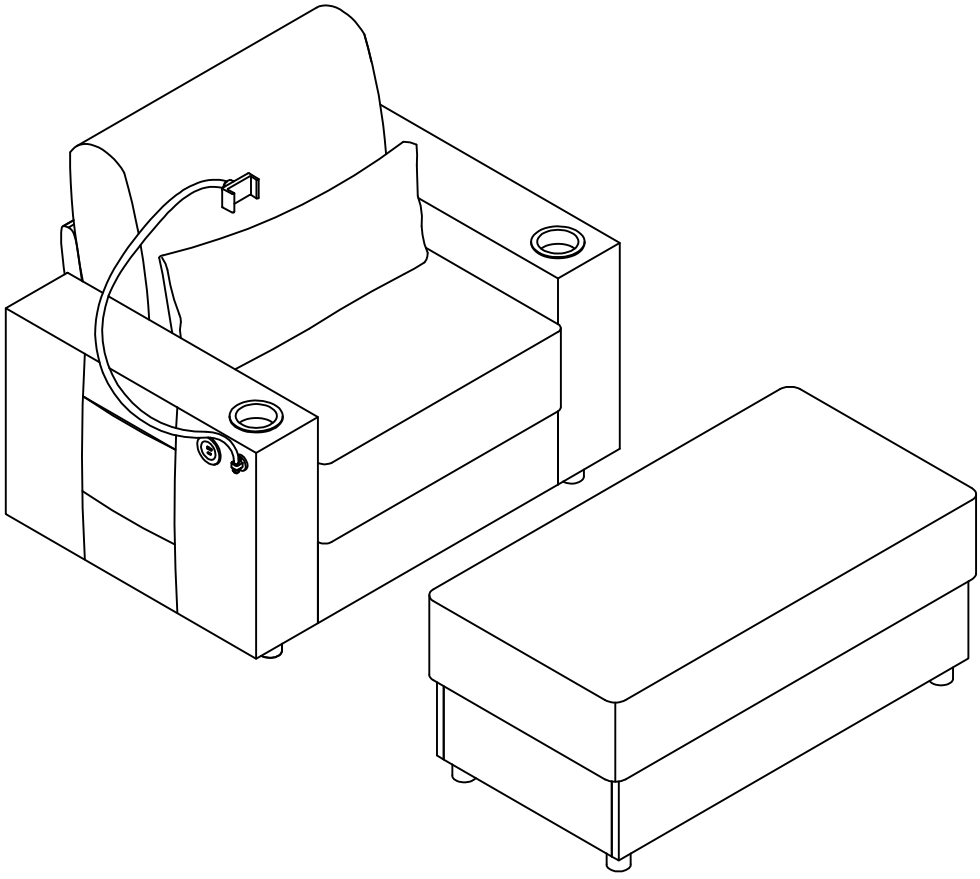

IMPORTANT NOTE

**Place all parts on a lean and smooth surface such as a rug or carpet to avoid the parts from being scratched.
**Before you begin, please review the assembly instruction step by step.
**Return & Warranty Policy:
-We strive to offer the highest quality products. We also provide positive solutions with replacements or refund if needed.
-If the item is damaged or defective, please take photos to show the problem and email to the seller.
-Please do not return back the product before contact the seller.

PART LISTS BOX 1

Part NO.	Part Image	Part Name	QTY
①	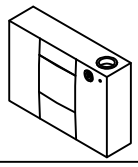	Left Armrest	1
②	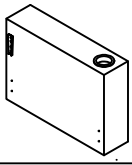	Right Armrest	1
③	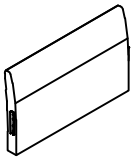	Backrest	1
④	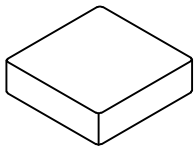	Chair Seat Cushion	1
⑤	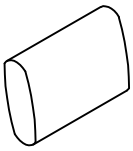	Back Cushion	1
⑥	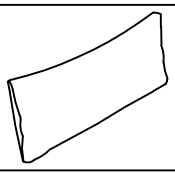	Pillow	1
⑦	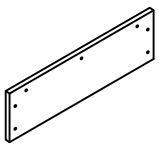	Bezel	2
⑧	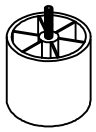	Plastic Foot	8
⑨		L-shaped iron hanging piece	4
⑩	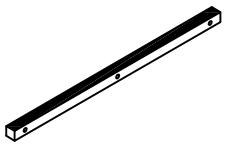	Pine Strip	2
⑪	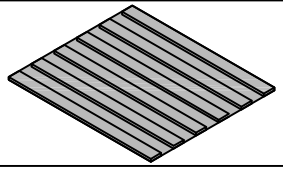	Chair Batten	1

Part NO.	Part Image	Part Name	QTY
⑫	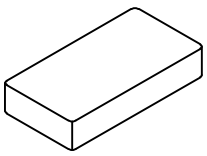	Ottoman Seat Cushion	1
⑬	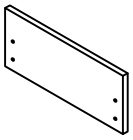	Short Side Panel	2
⑭	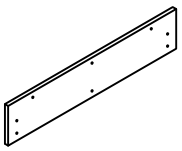	Long Side Panel	2
⑮	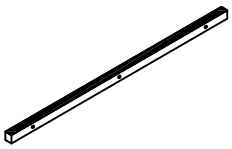	Pine Strip	2
⑯	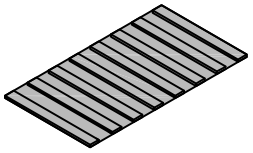	Ottoman Batten	1
⑰	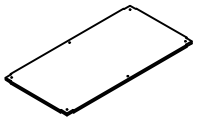	Bottom Plate	1
⑱	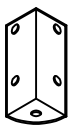	Foot hardware	4
⑲	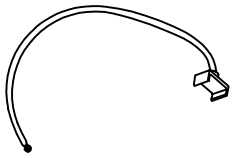	Mobile Phone Stand	1
⑳	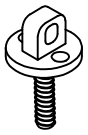	Bolt	1
㉑	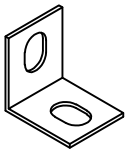	L-shaped iron sheet	2
㉒	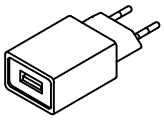	Adapter	1

Sofa Overall Assembly Drawing

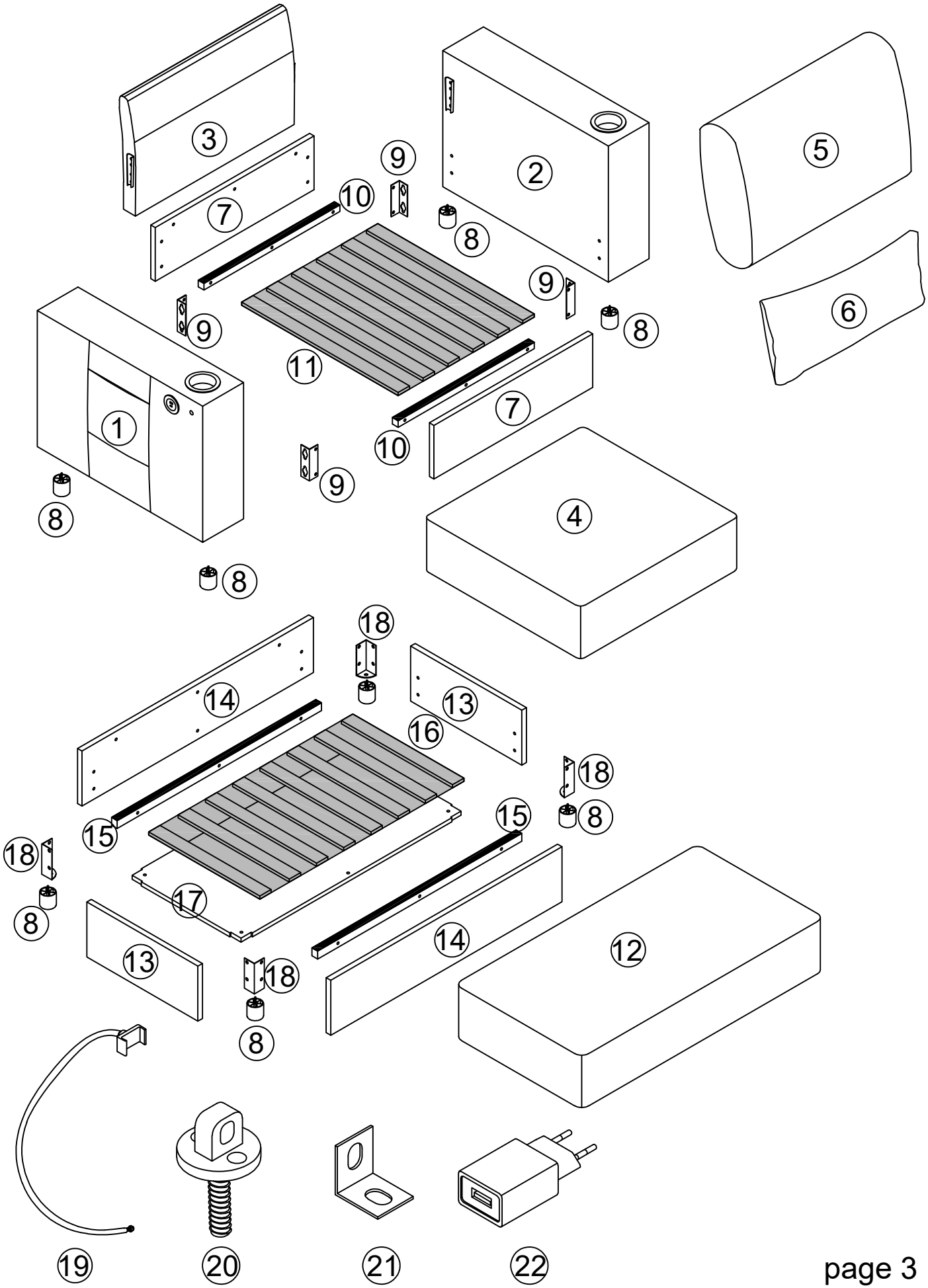

Hardware List

Ax12+1 PCS  5/16X40mm	Bx8 PCS  5/16X25mm	Cx28+2 PCS  5/16X15mm
Dx2 PCS  M4X15mm	Ex1 PC  5/16	Fx1 PC 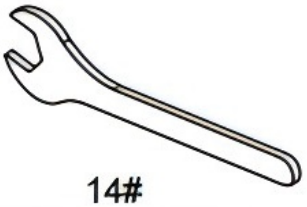 14#

STEP 1

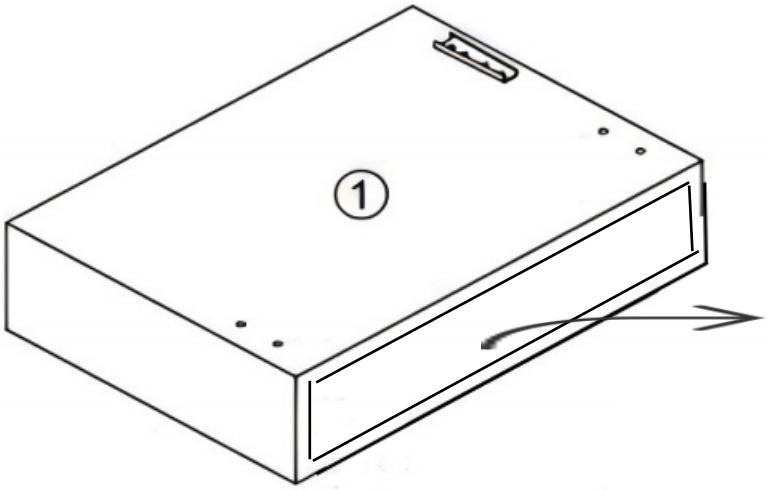

16

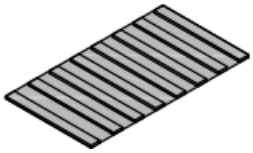

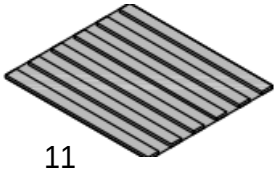

11

STEP 2

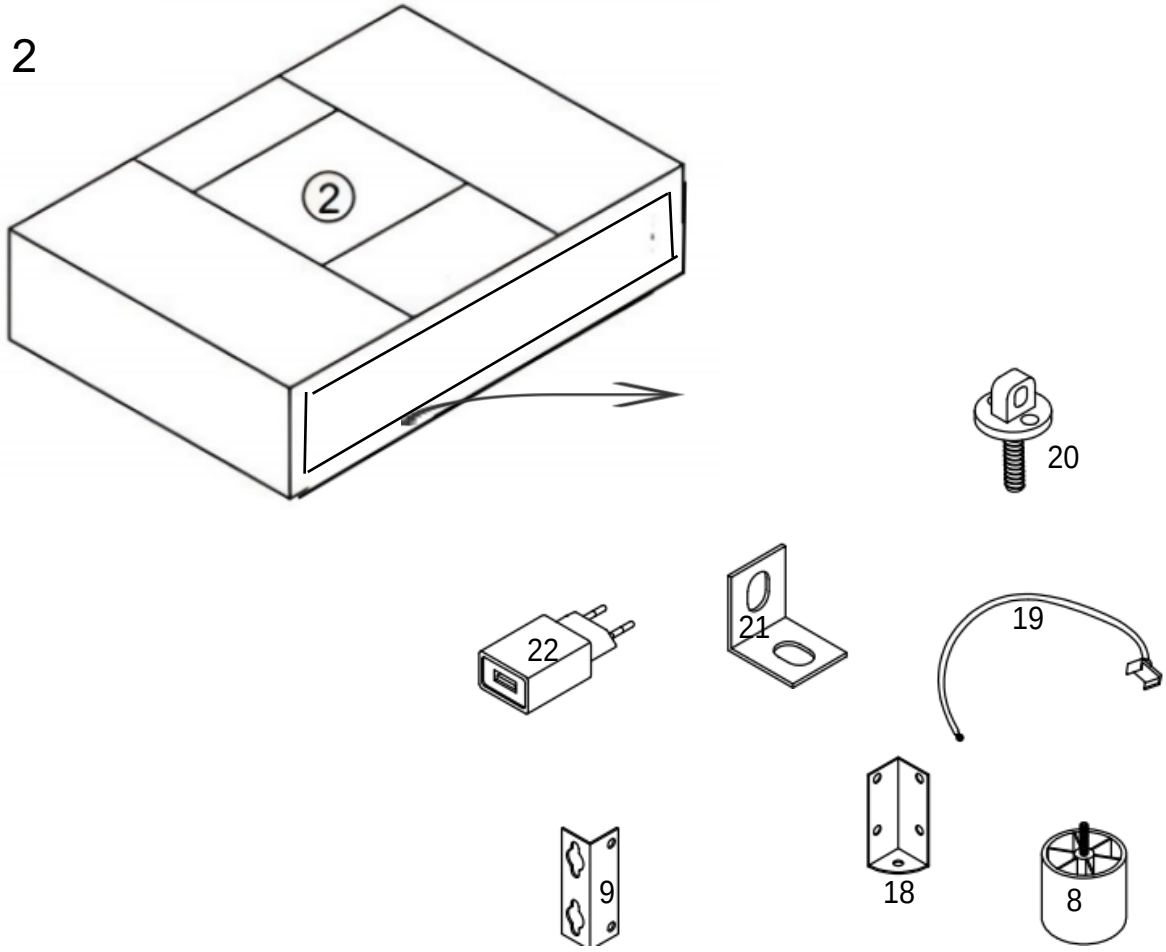

STEP 3

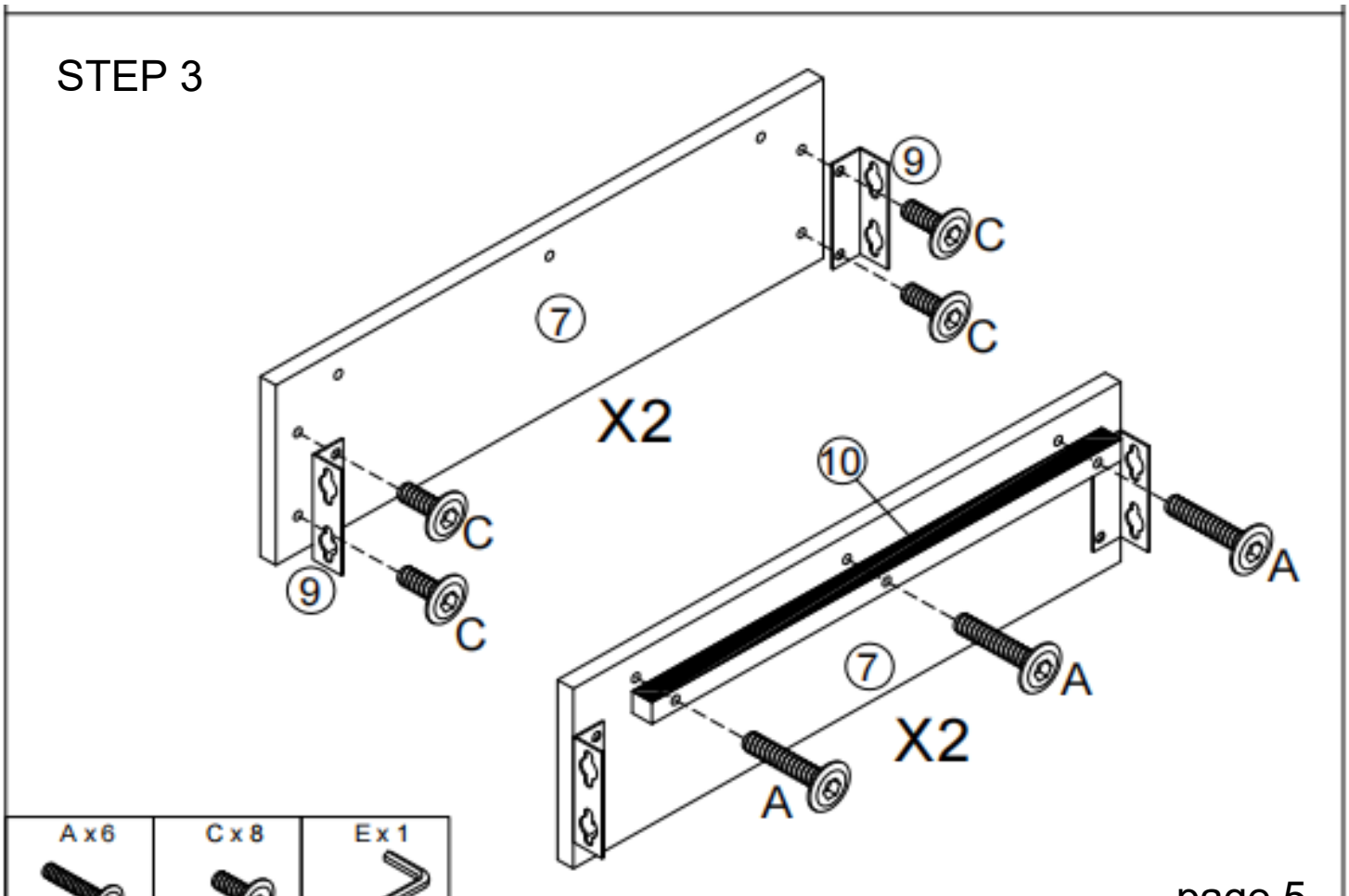

A x 6	C x 8	E x 1
5/16X40mm	5/16X15mm	5/16

STEP 4

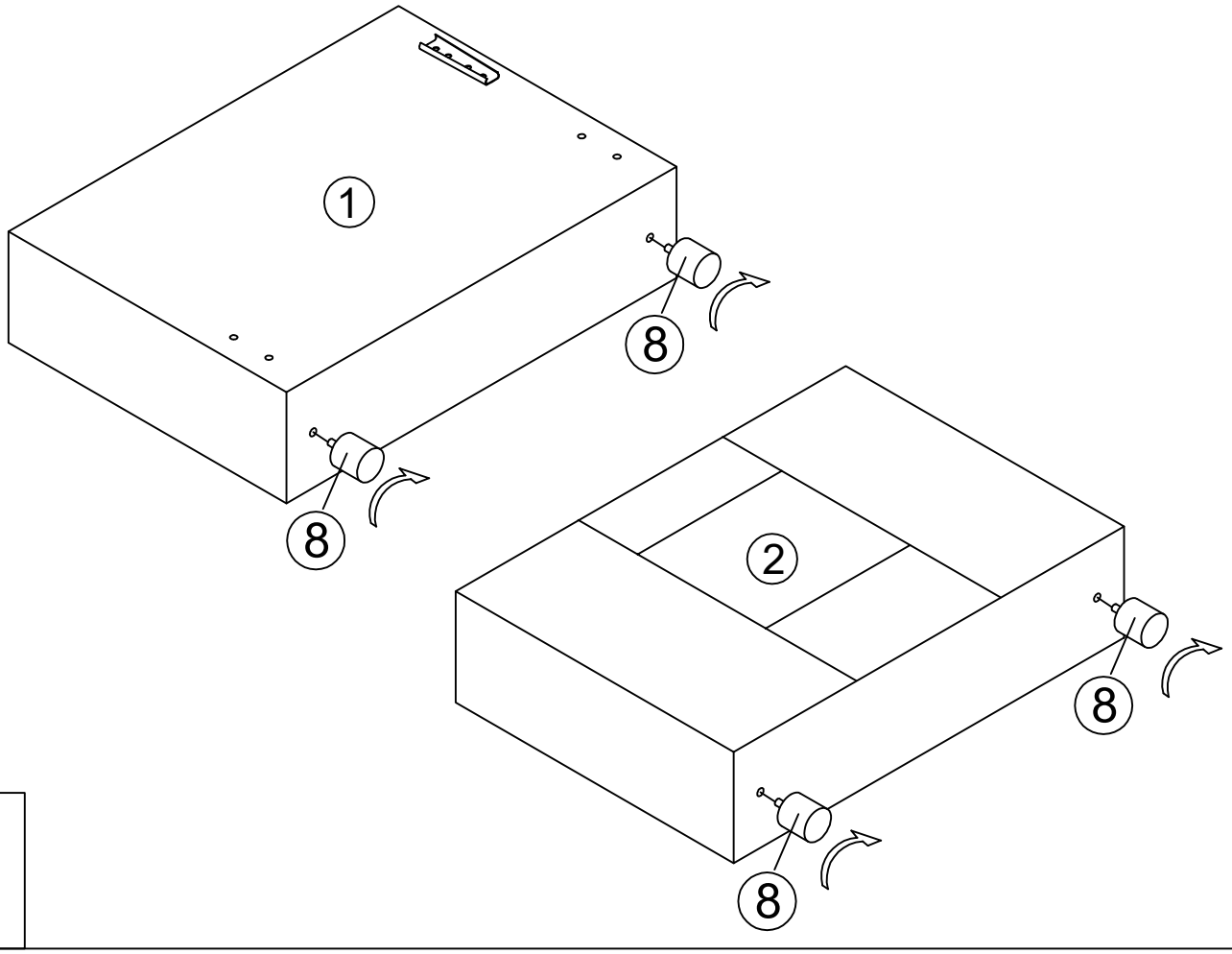

⑧ x4



STEP 5

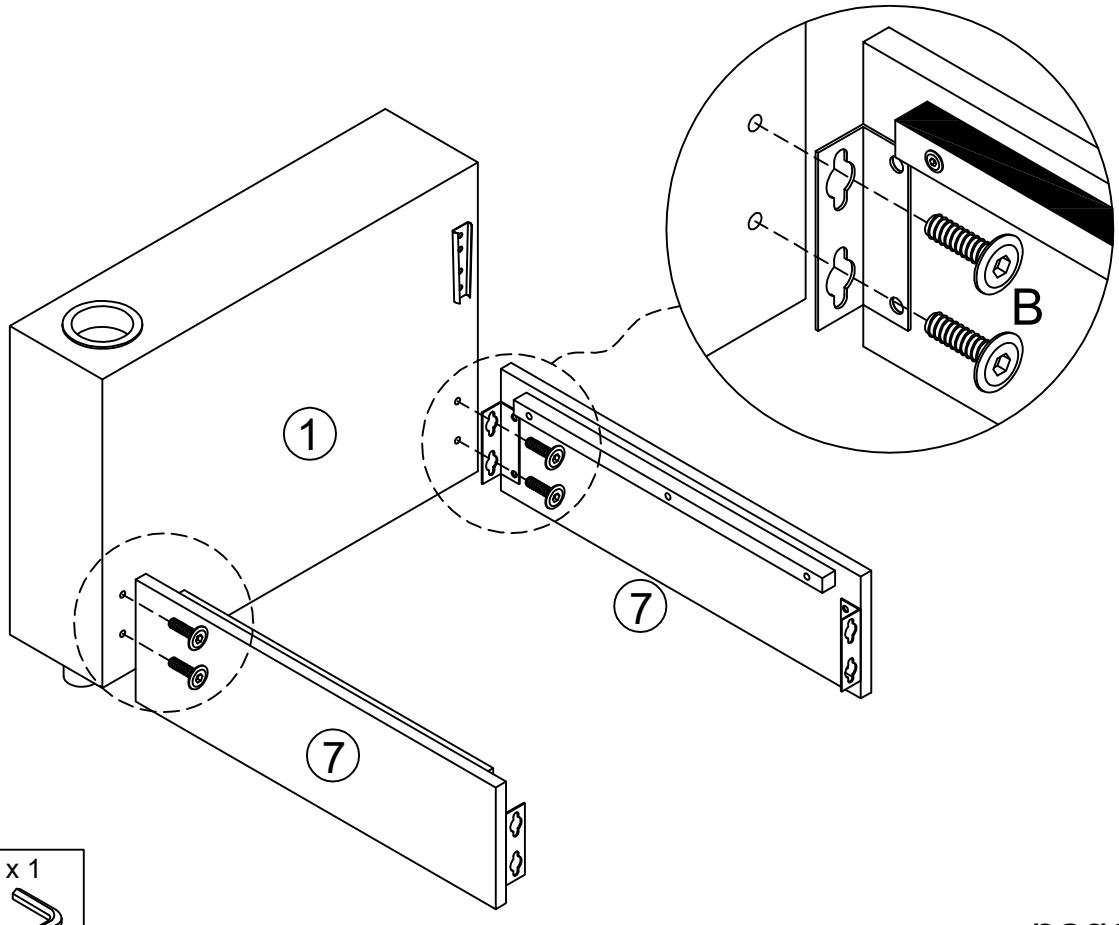

B x 4



5/16X25mm

E x 1



5/16

STEP 6

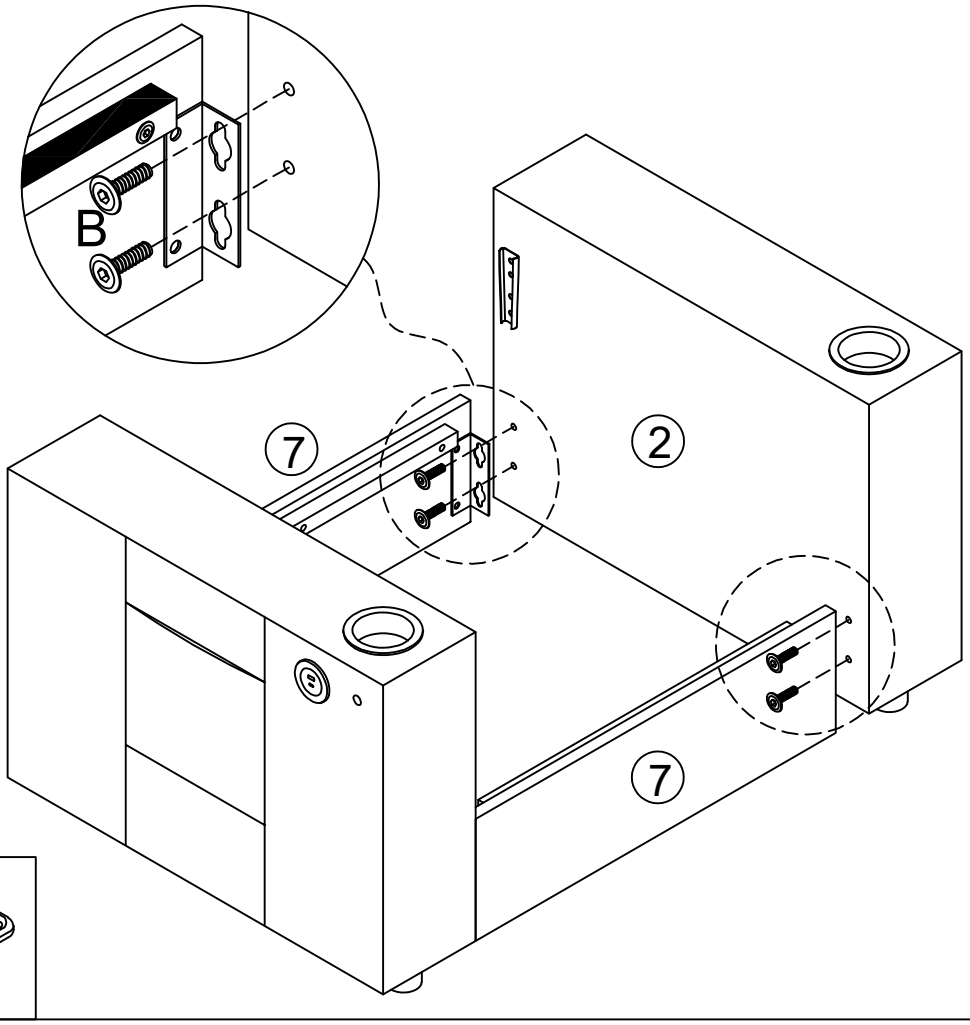

B x 4	E x 1
5/16X25mm	5/16

STEP 7

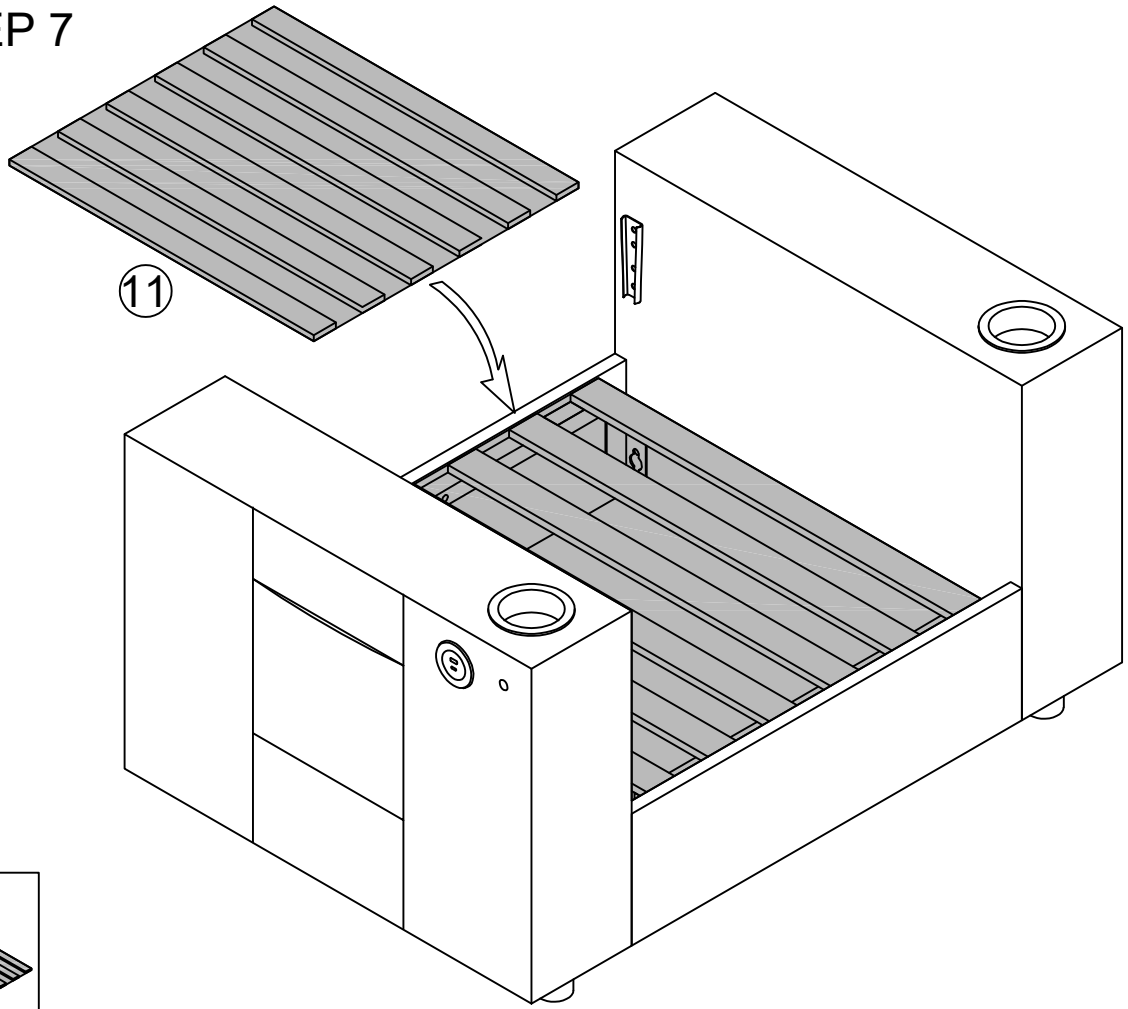

11 x1

STEP 8

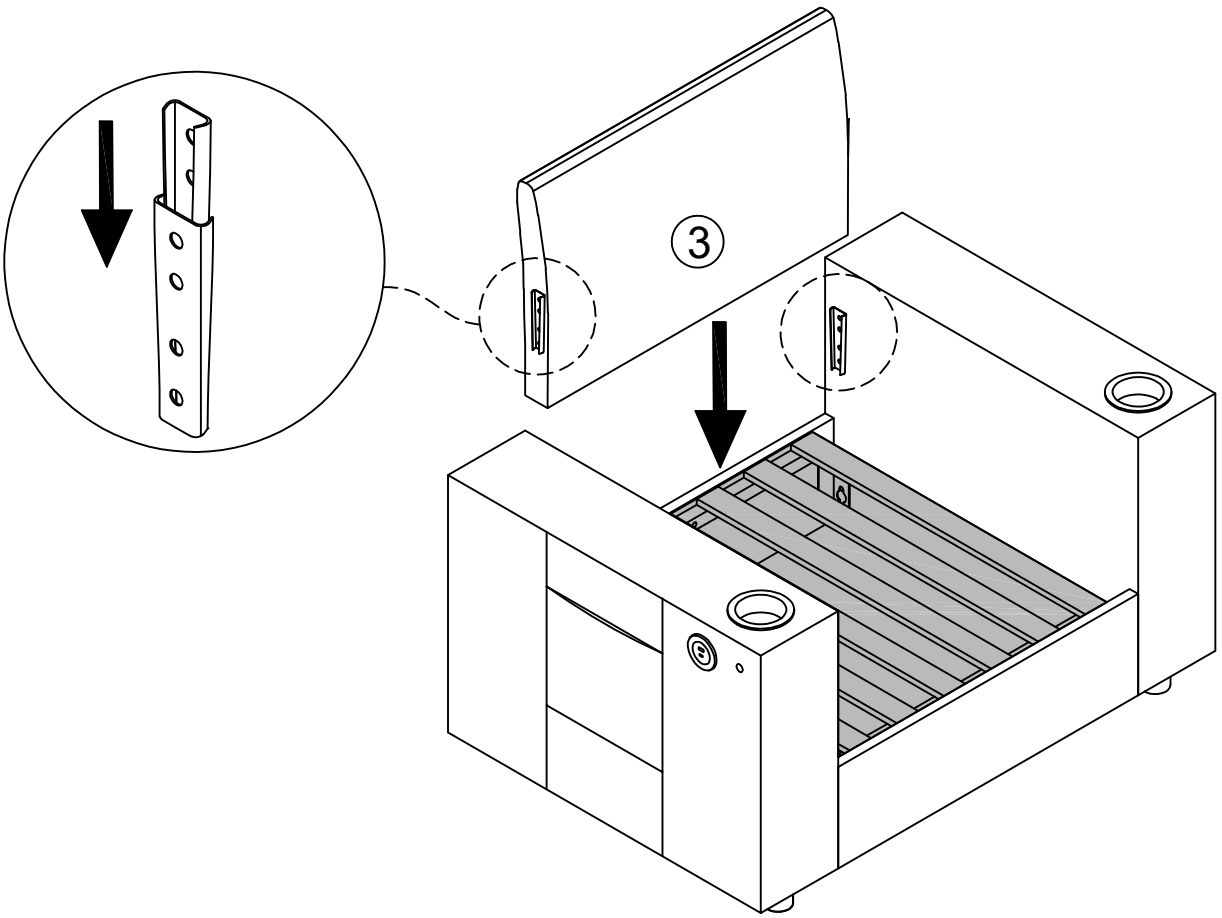

STEP 9

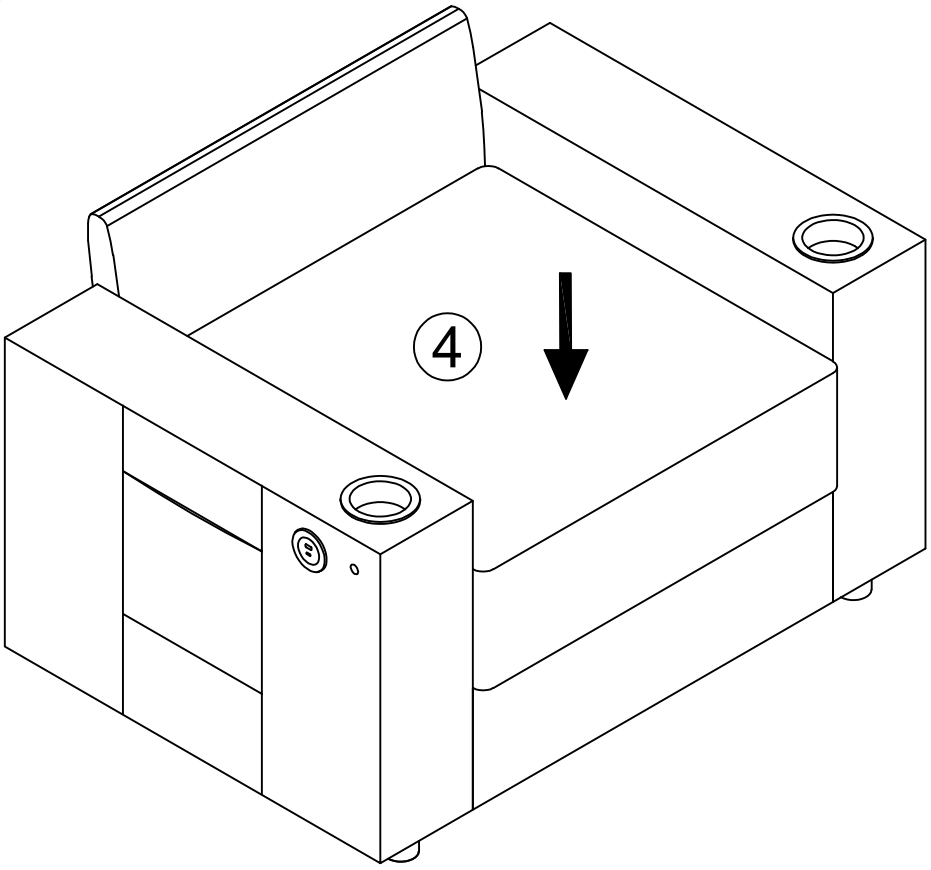

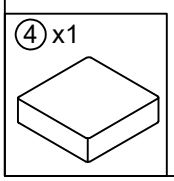

STEP 1 0

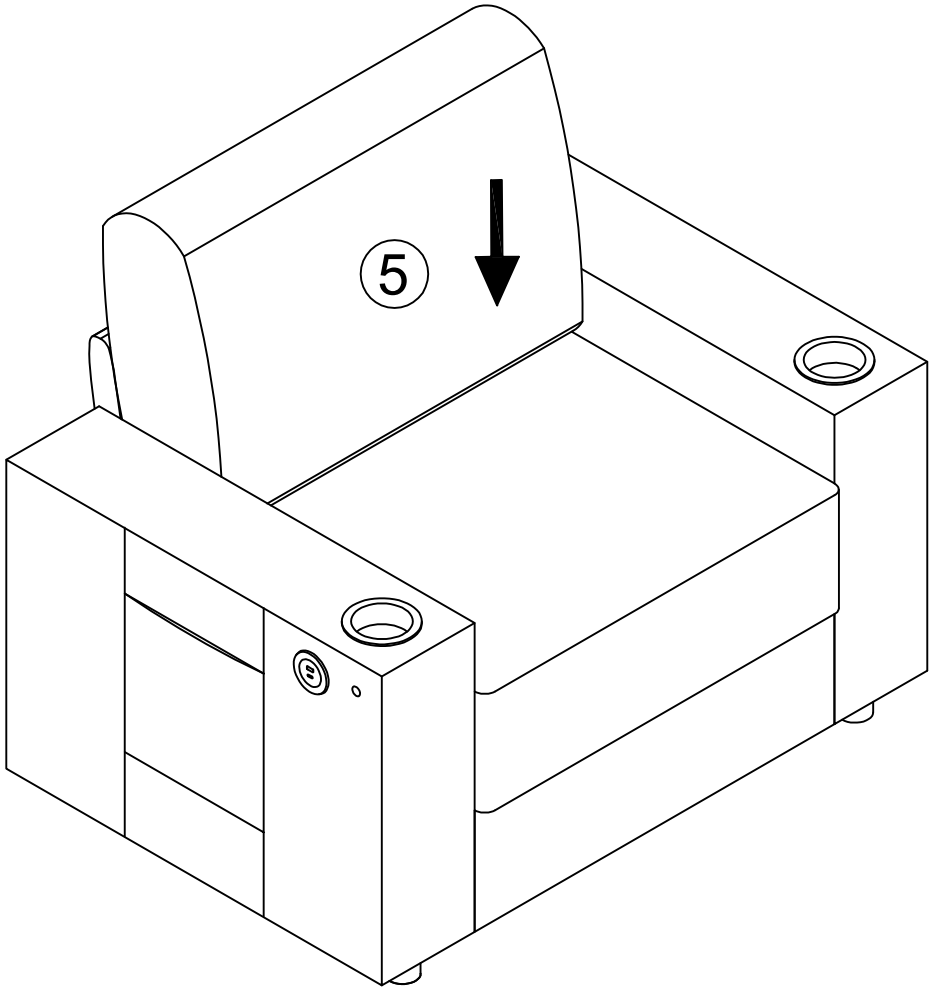

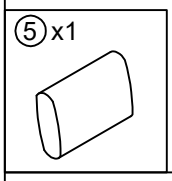

STEP 1 1

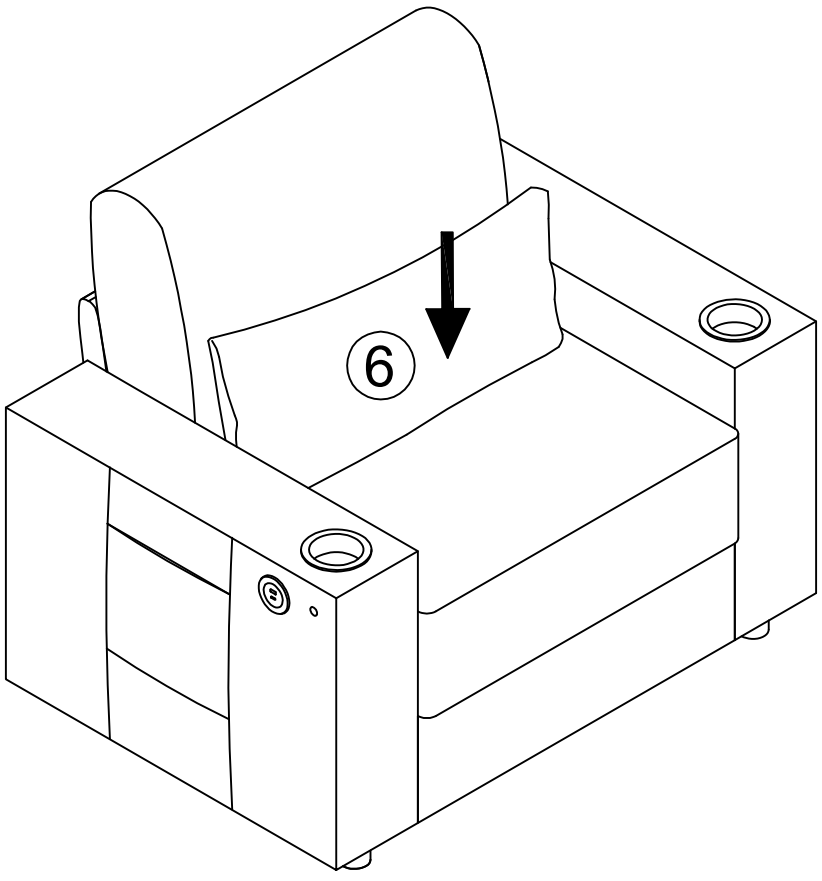

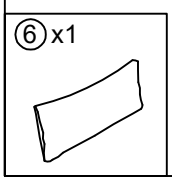

STEP 12

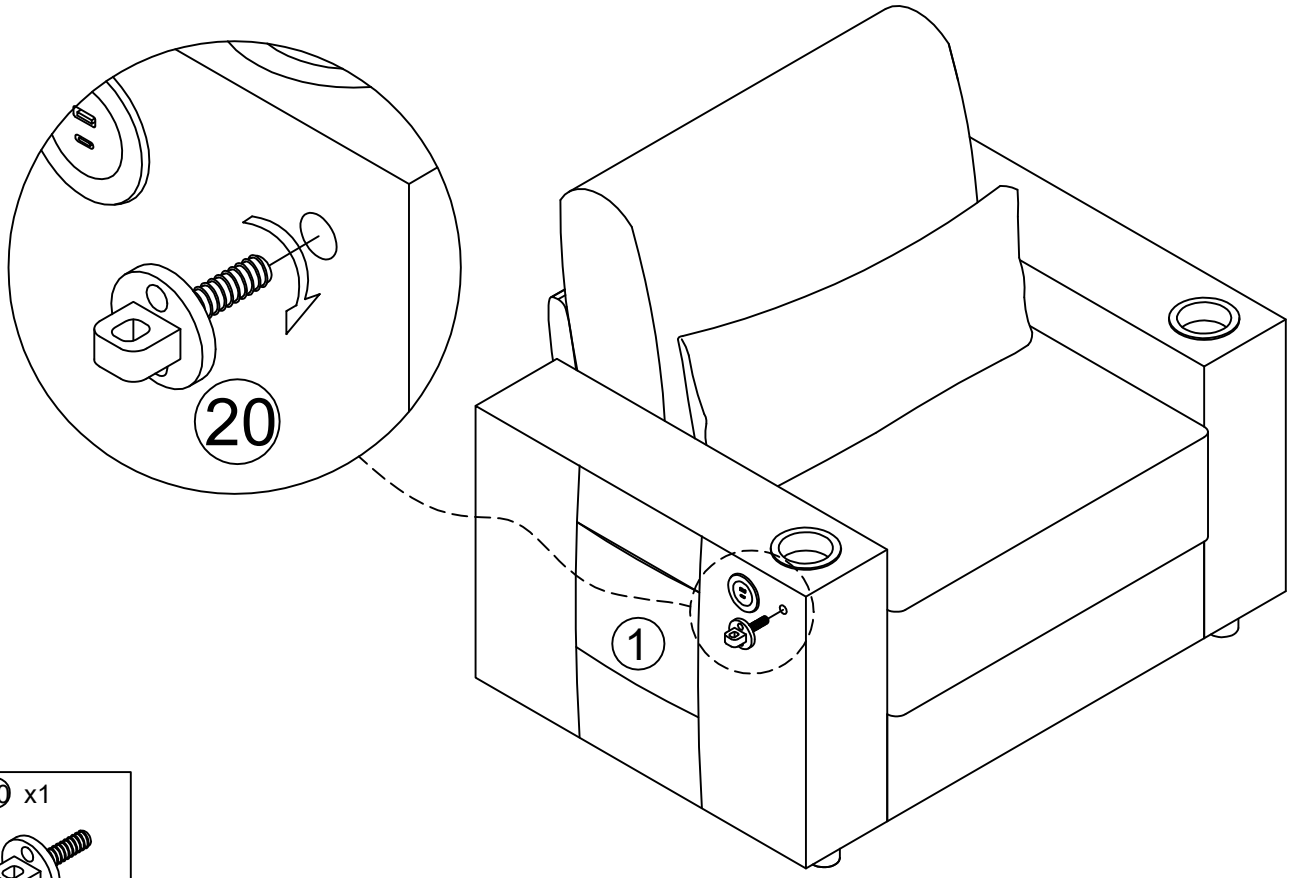

20 x1



STEP 13

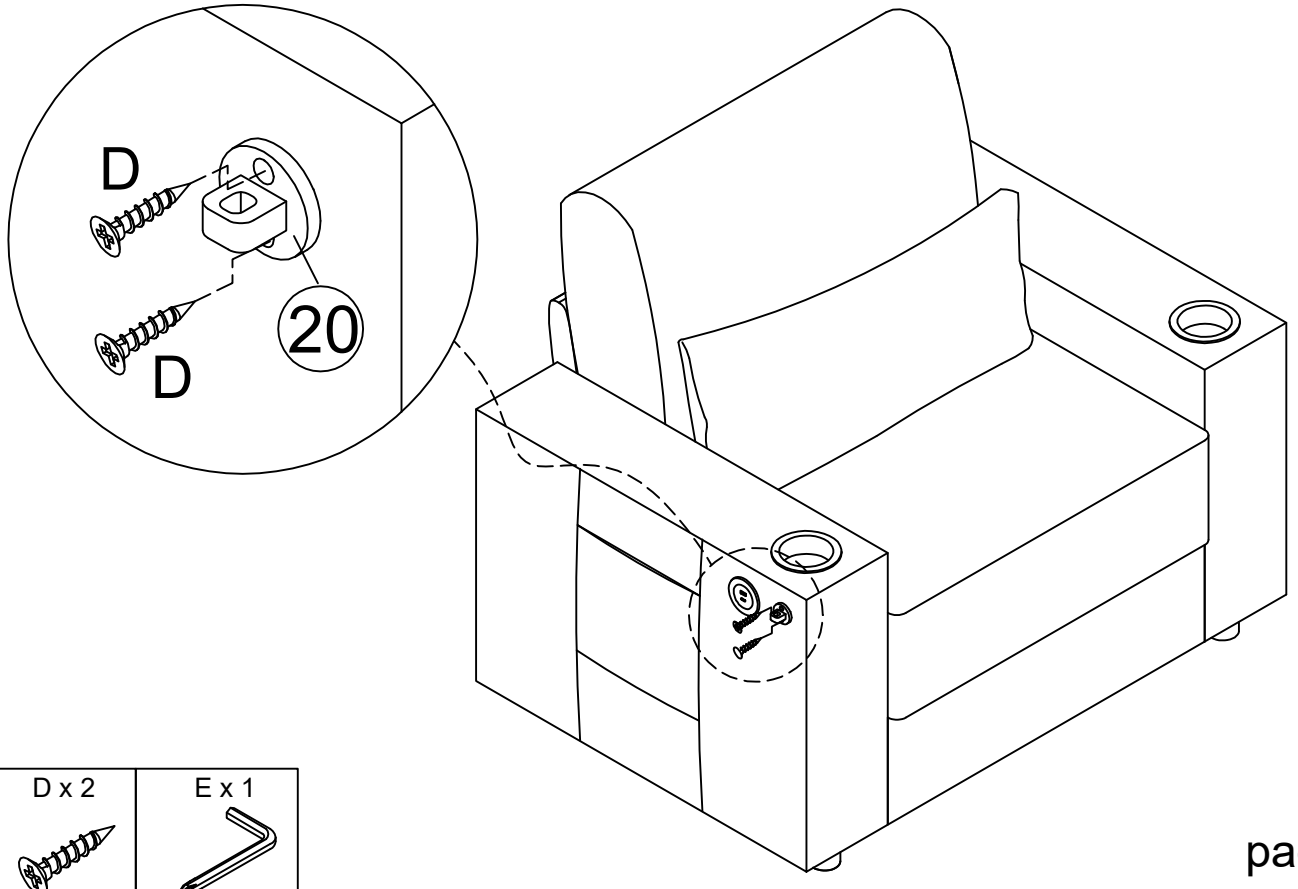

D x 2	E x 1
M4X15mm	5/16

STEP 14

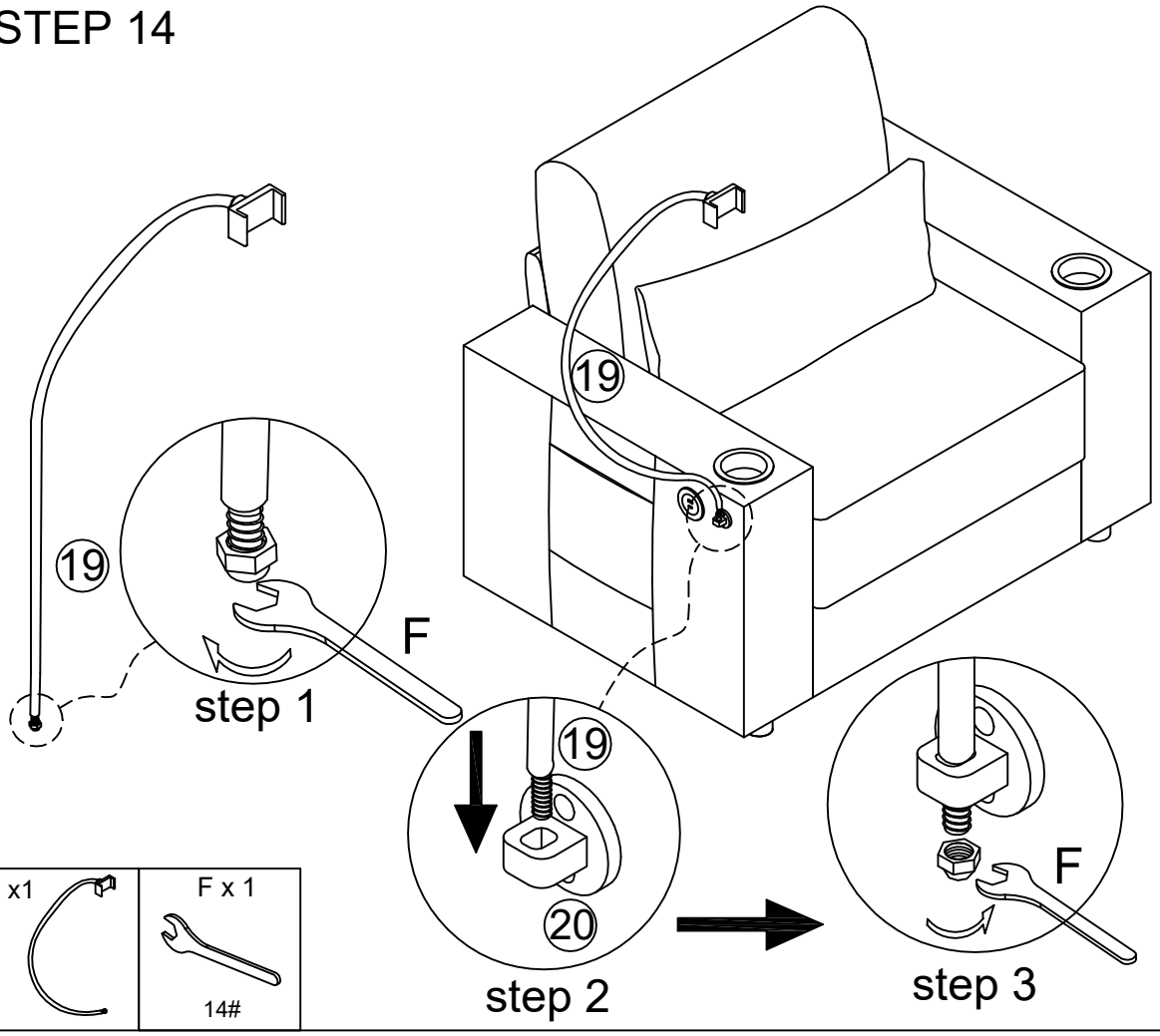

⑲ x1	F x 1
	14#

STEP 15

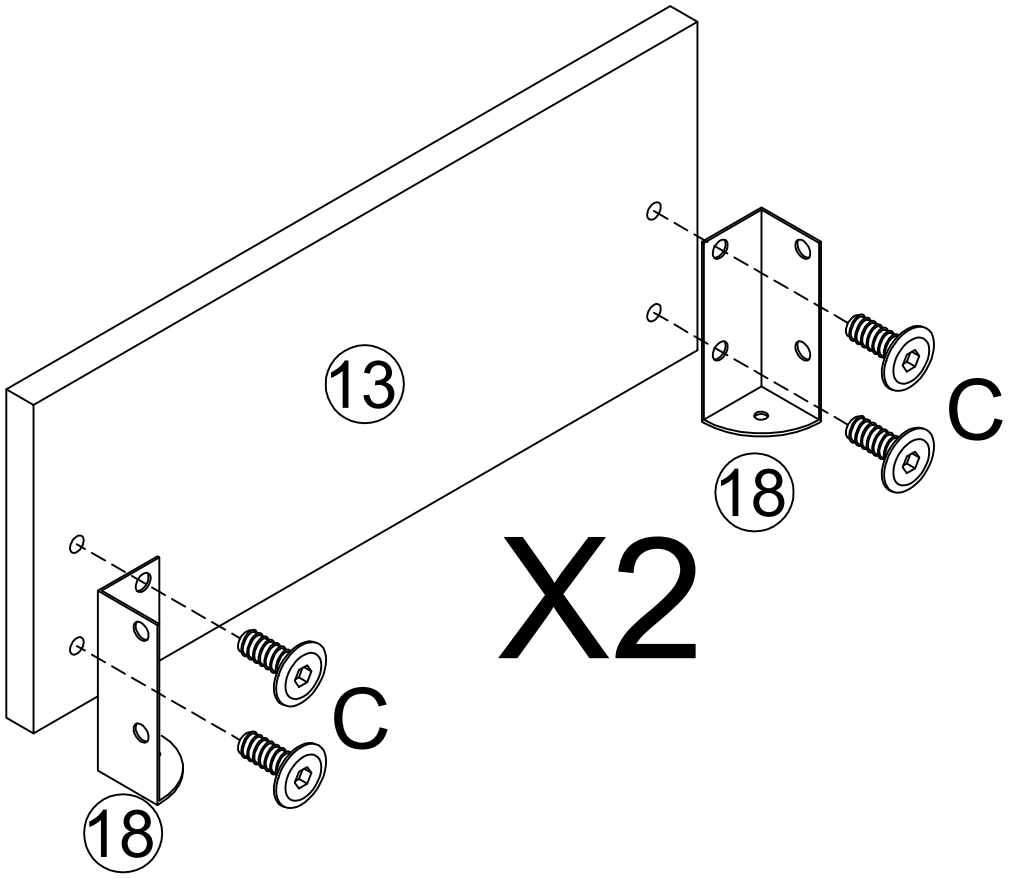

⑱ x4	
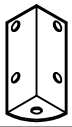	
C x 8	E x 1
 5/16X15mm	 5/16

STEP 16

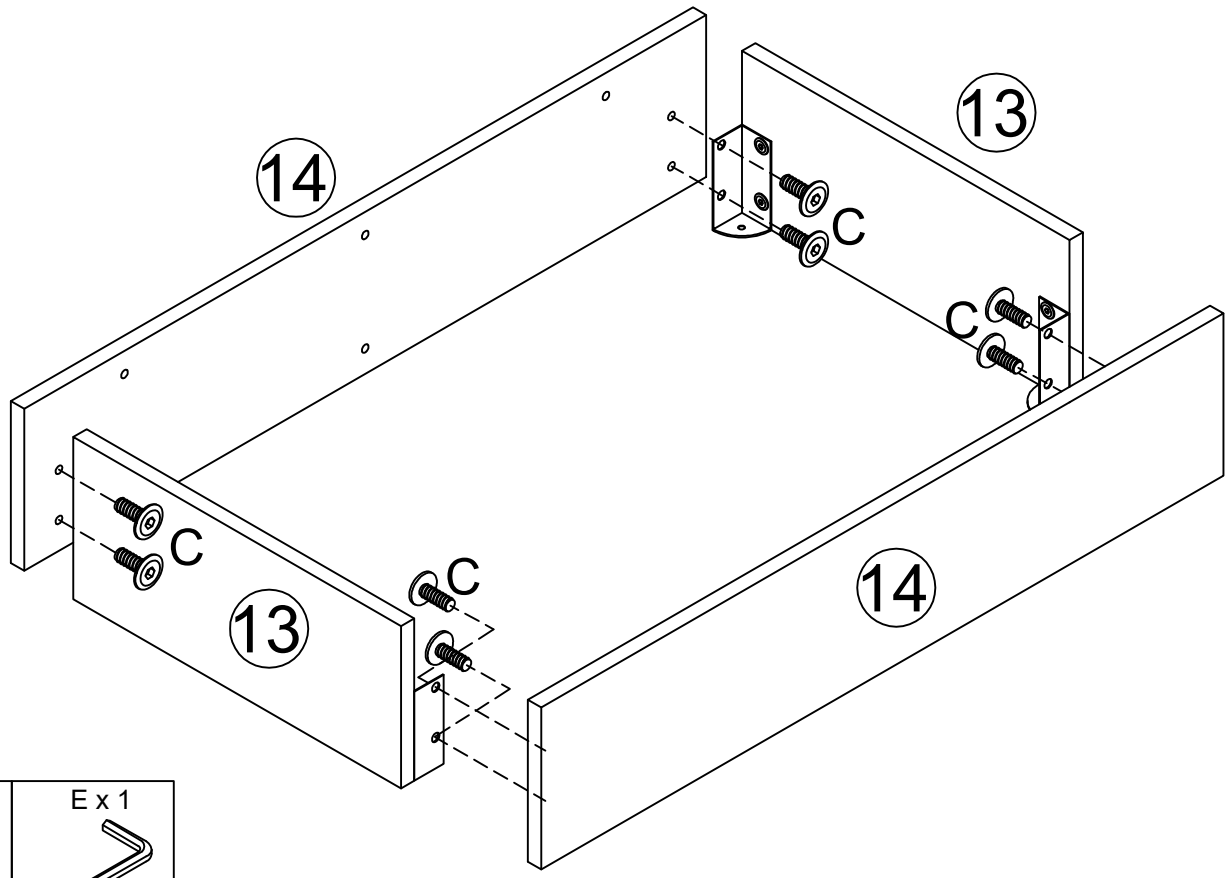

C x 8	E x 1
	
5/16X15mm	5/16

STEP 17

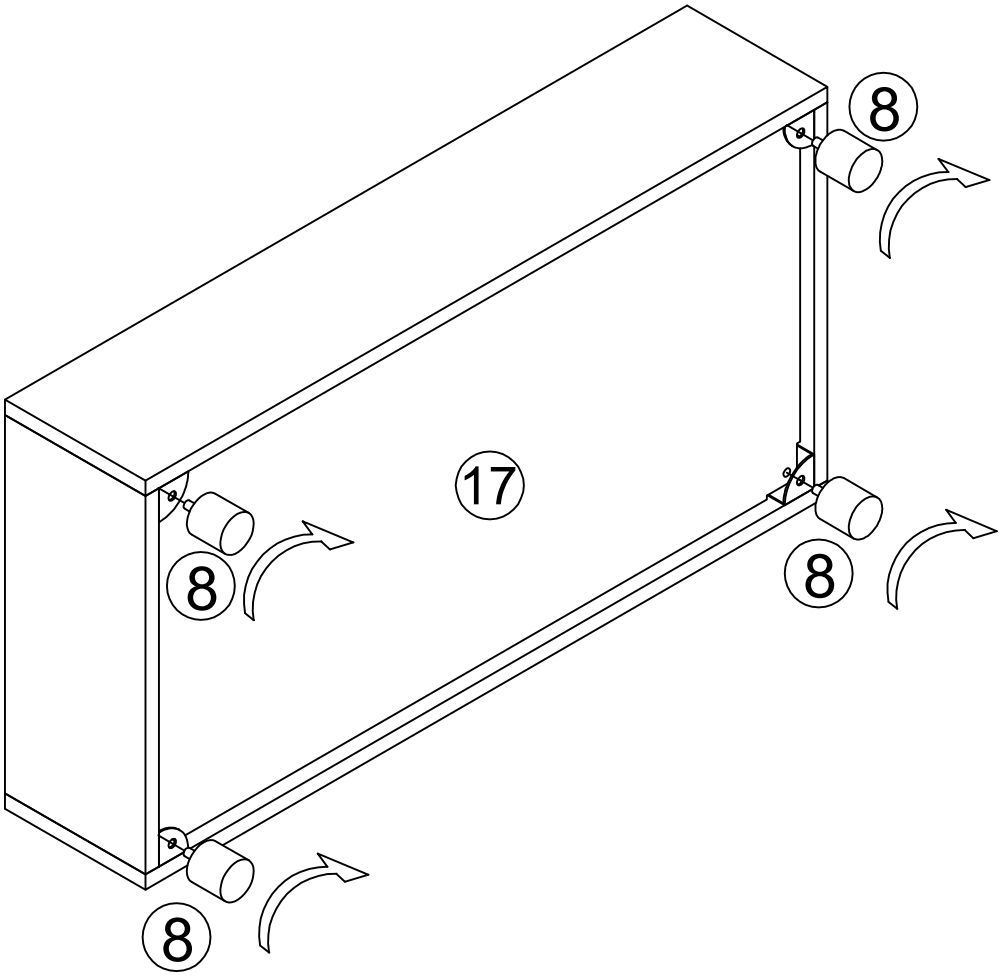

⑧ x4

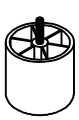

STEP 18

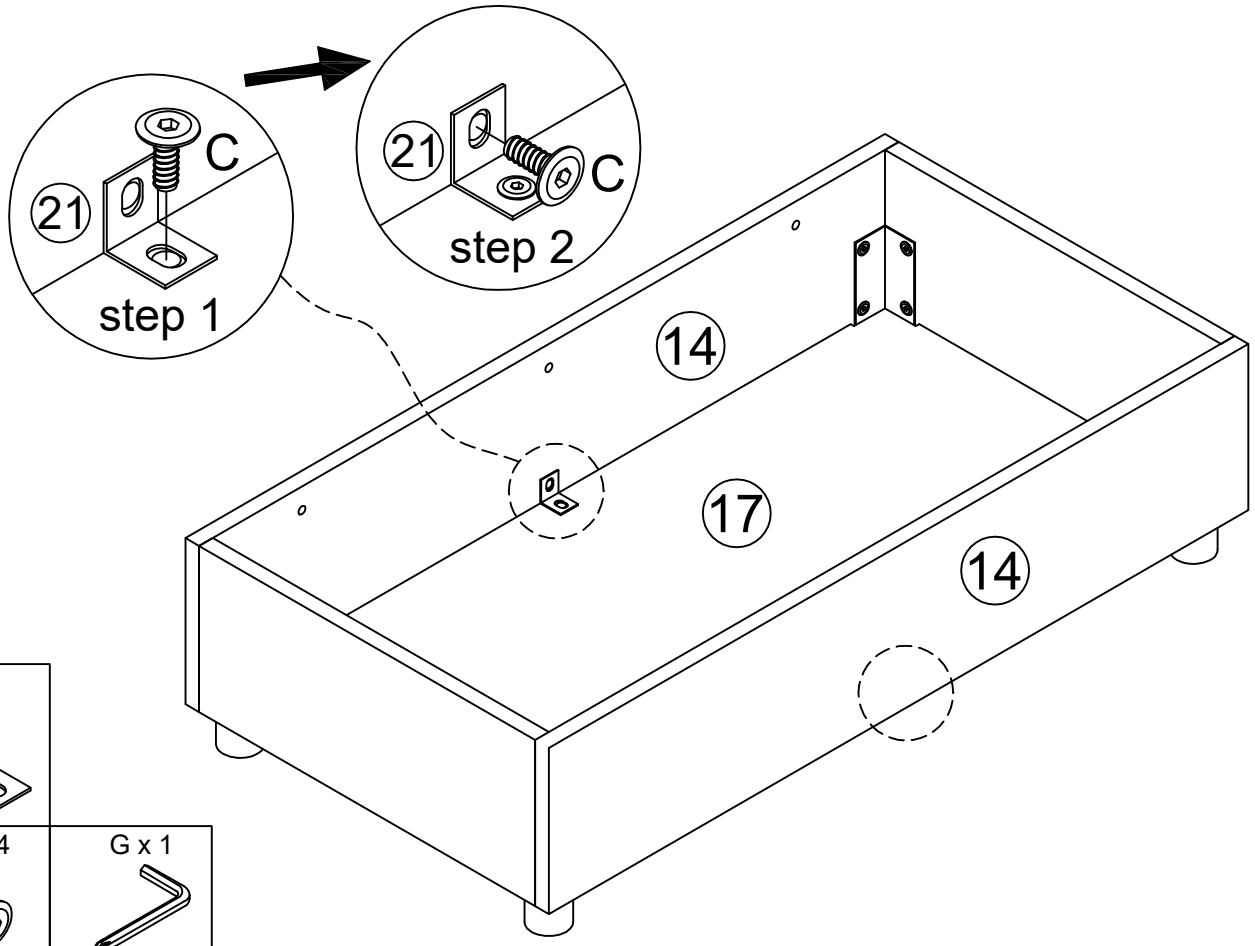

21 x2	
C x 4	G x 1
5/16X15mm	5/16

STEP 19

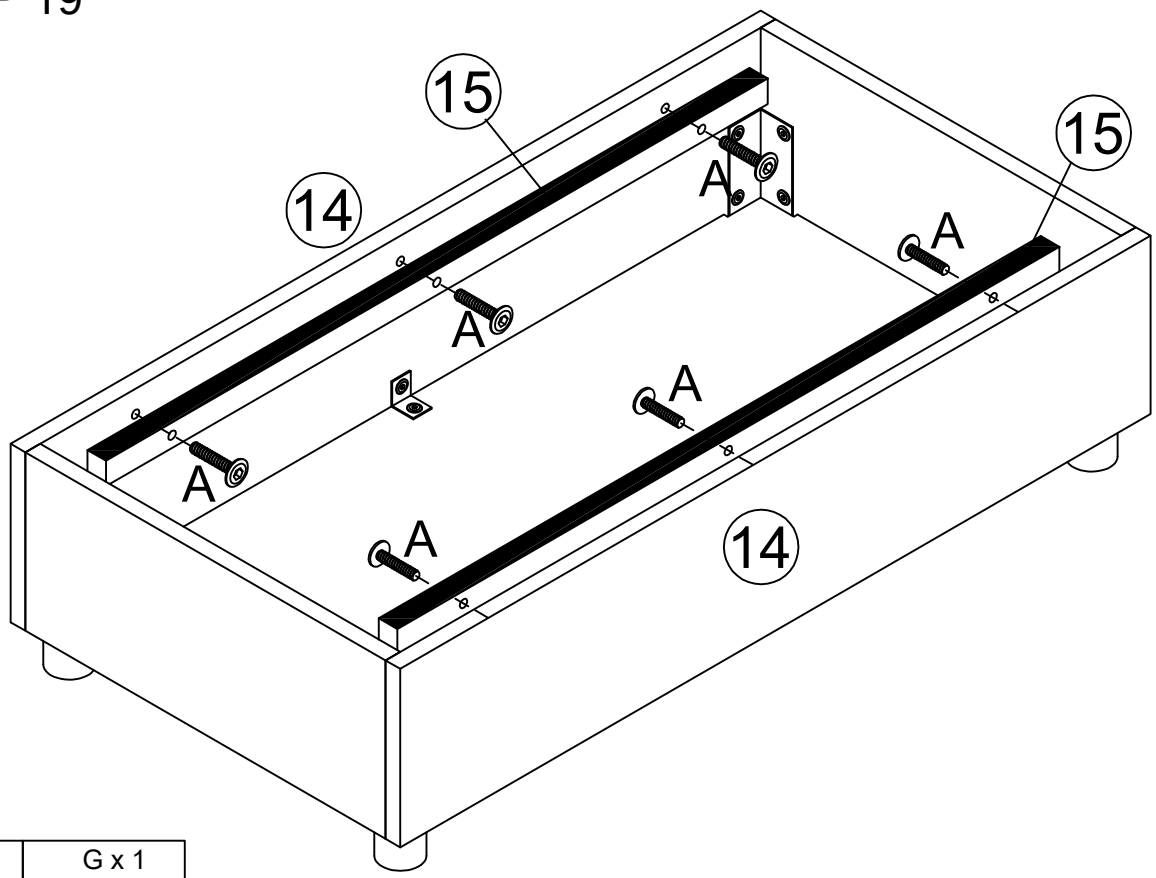

A x 6	G x 1
5/16X40mm	5/16

STEP 2 0

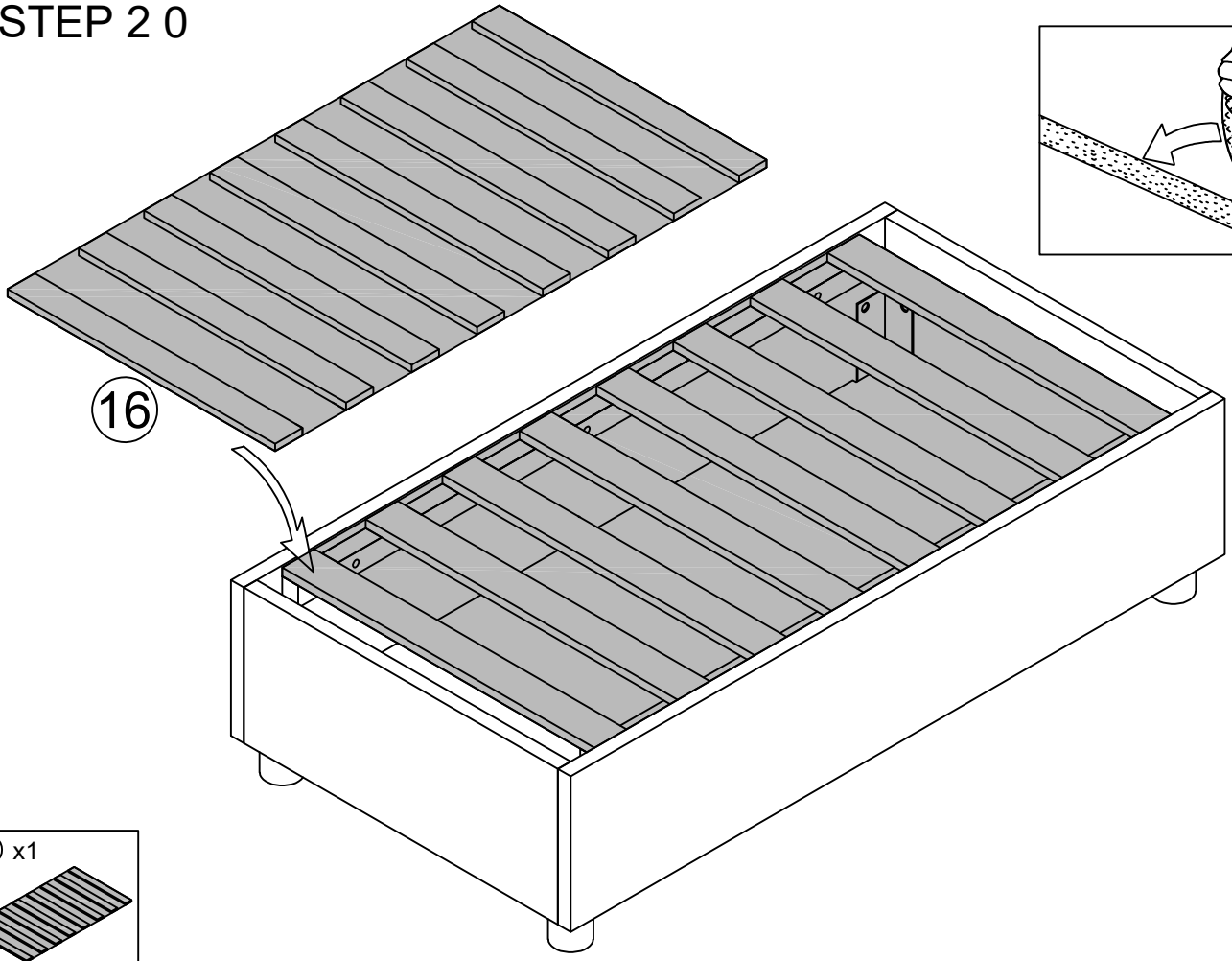

⑯ x1

STEP 2 1

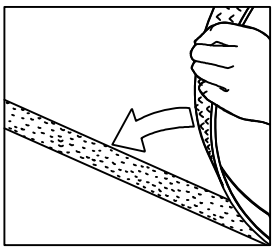

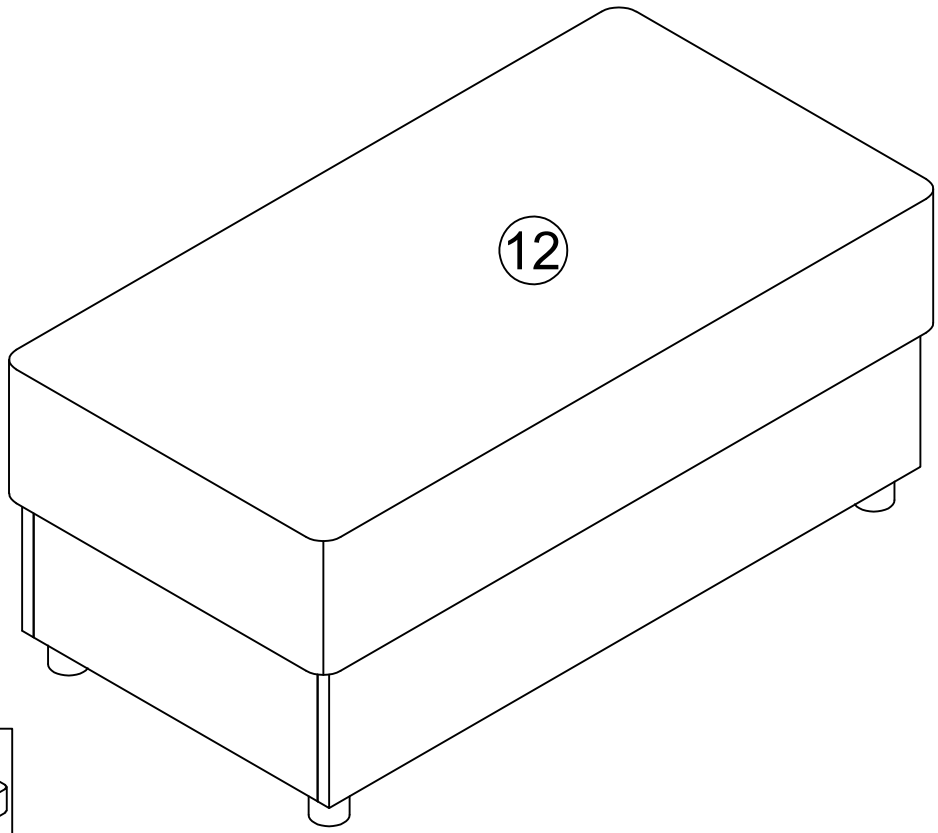

⑫ x1

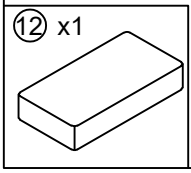

STEP 22

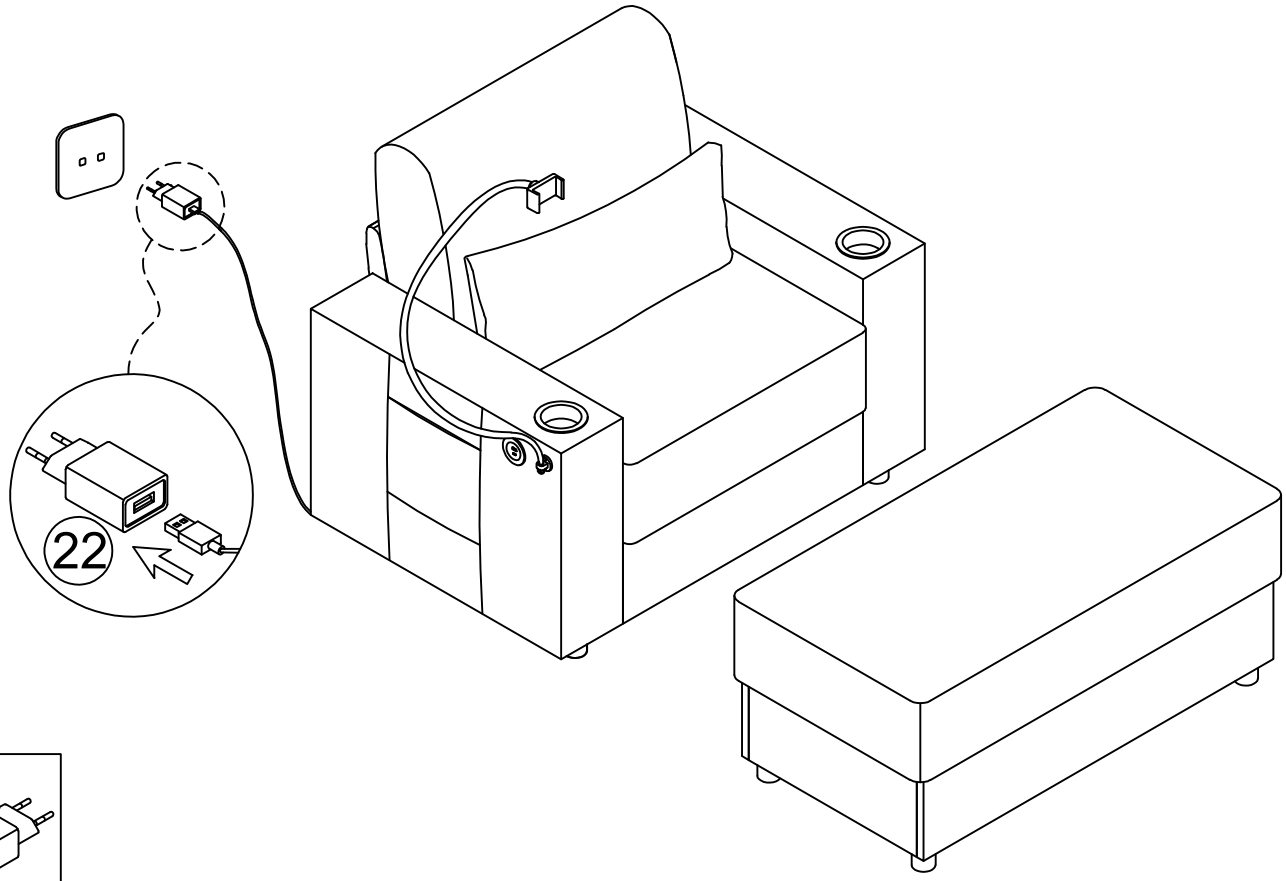

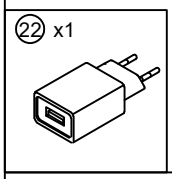

STEP 2 3

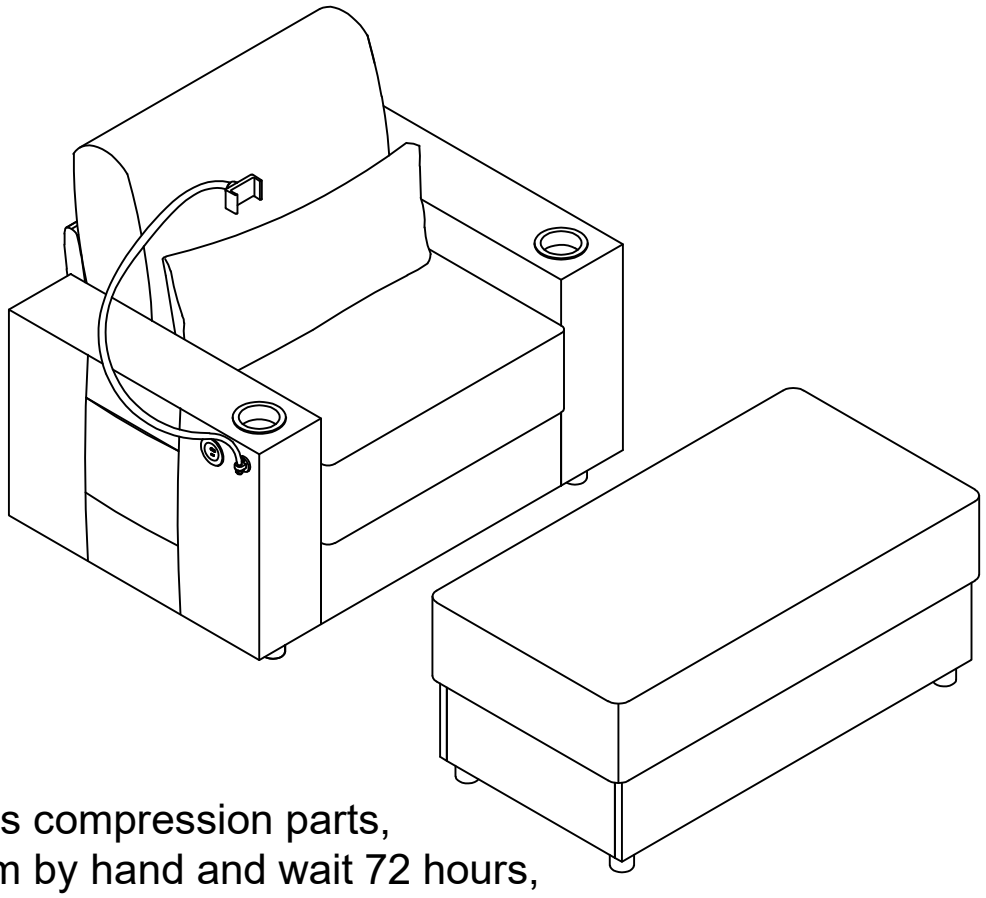

The product has compression parts,
Please pat them by hand and wait 72 hours,
the cushions will be recover.