INSTALLATION MANUAL

CEILING FAN WITH LIGHTS

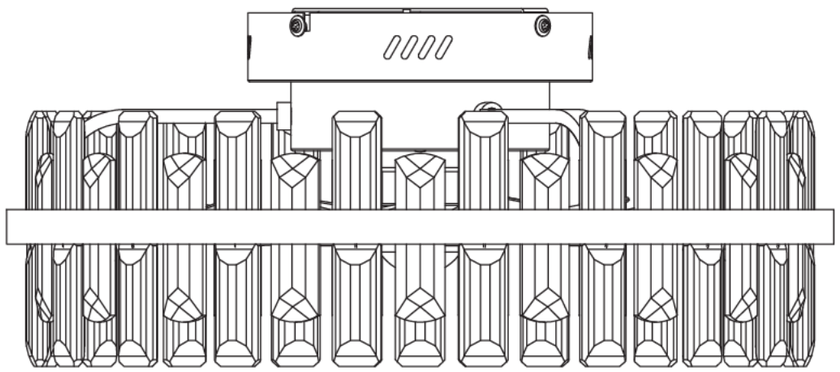

TOOLS REQUIRED

Ladder

Pliers

Wire Strippers

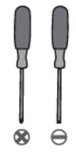

Screwdrivers

PACKING LIST

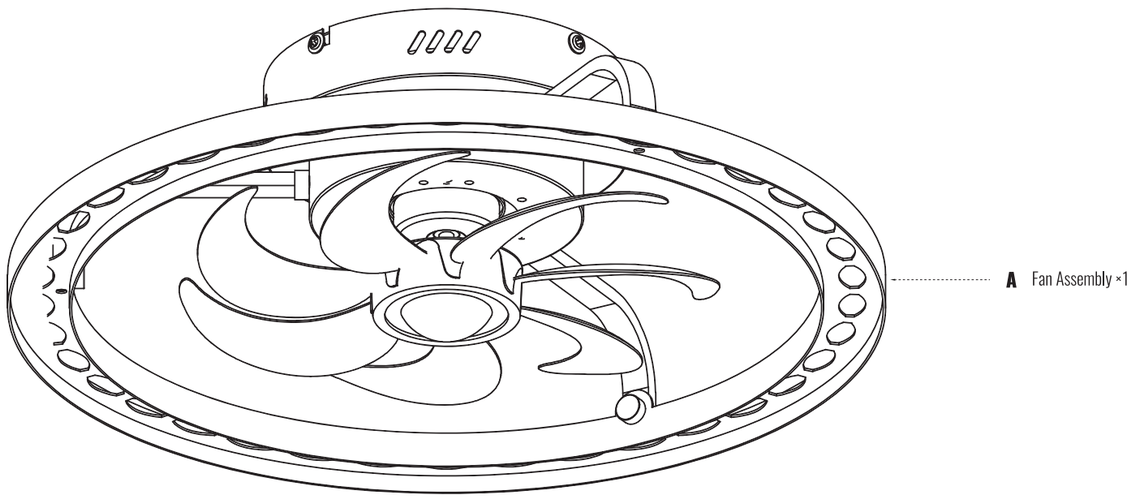

INSTALLATION KIT

AA 1× Mounting Bracket	**BB** 3× Wire Nut	**CC** 2× Outlet Box Screw	**DD** 2× Flat Washer	**EE** 4× Long Wood Screw	**FF** 4× Plastic Anchor
GG 1× "S" Hook	**HH** 4× Canopy Screw	**II** 38× Silicone Elastic Ring	**JJ** 38× Fastener	**KK** 19× Long Crystal	**LL** 19× Short Crystal
MM 2× Short Wood Screw	**NN** 2× Remote Holder Anchor	**PP** 1× Remote Control		**QQ** 1× Remote Holder	**RR** 1× Pair of Gloves

NOTE:

1. The crystals are fragile and spare parts are included.
2. The listed quantity is for installation, extra hardware may be included.
3. Mounting bracket (AA) and canopy screws (HH) are pre-installed on fan assembly (A).

INSTALLATION

1. Install the Mounting Bracket

Loosen and remove the canopy screws (HH) from the round holes, and loosen the canopy screws (HH) in the 'L' holes but do not remove them, and then remove the mounting bracket (AA) from the canopy.

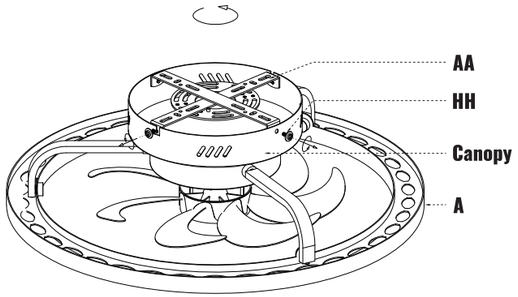

Step 1: Mark and drill screw holes in the ceiling, then insert the plastic anchors (FF).
Step 2: Use outlet box screws (CC) and flat washers (DD) to fix the mounting bracket (AA) to the outlet box, and then tighten it with long wood screws (EE).

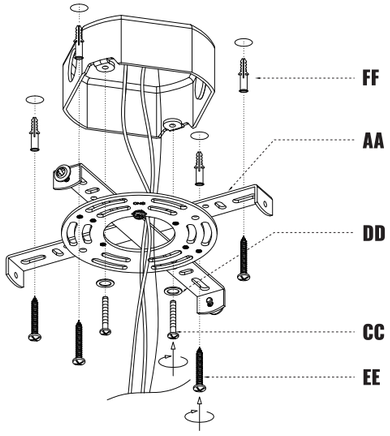

2. Hang the Fan

Hang the fixture onto the mounting bracket (AA) with "S" hook (GG) provided.

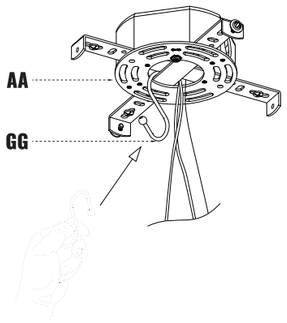

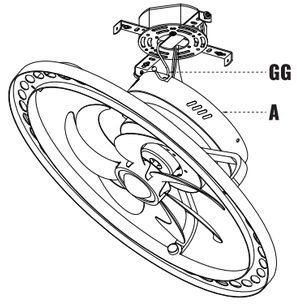

3. Connect the Wires

Step 1: Connect the wires from the fan to the house supply wires with wire nuts (BB), ground wire (green, green/yelow, or bare copper) to ground wire, neutral wire (white) to neutral wire, and hot wire (black) to hot wire. Wrap the connection with electrical tape.
Step 2: Spread apart the wires so that the hot wires are on one side of the outlet box and the neutral wires are on the other side.
Note:
1. This fan only needs one set of input wires (black, white, and ground wire). Both of the fan and lights will be controlled by the remote controller.
2. This fan can only be connected to an on/off switch if you have one, not a dimmer switch.

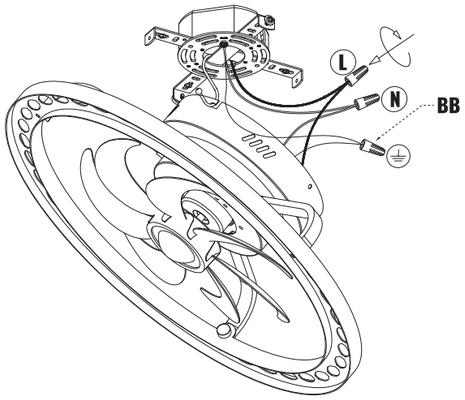

4. Attach the Canopy

Take away the "S" hook (GG).

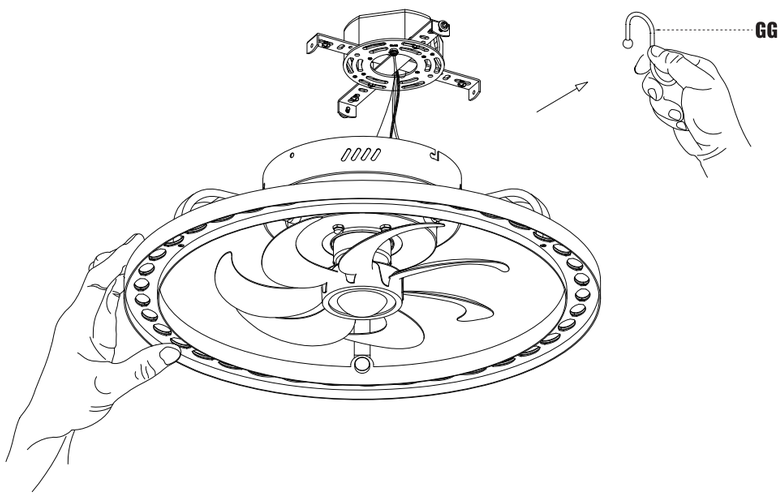

Align the "L" slots from the canopy to the canopy screws (HH) on the mounting bracket (AA), rotate the canopy to lock it onto the mounting bracket (AA).

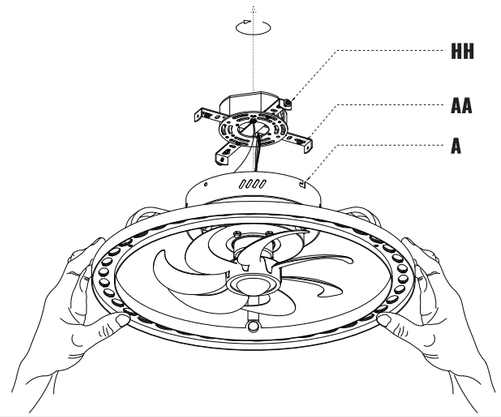

Tighten the canopy screws (HH).

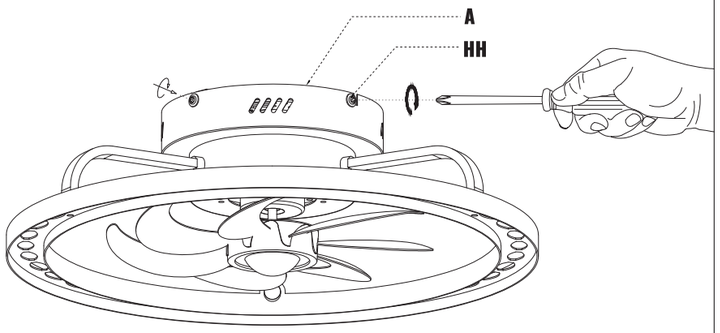

5. Attach the Crystal

Slide the silicone elastic ring (II) and fastener (JJ) onto the middle of the short crystal (LL).

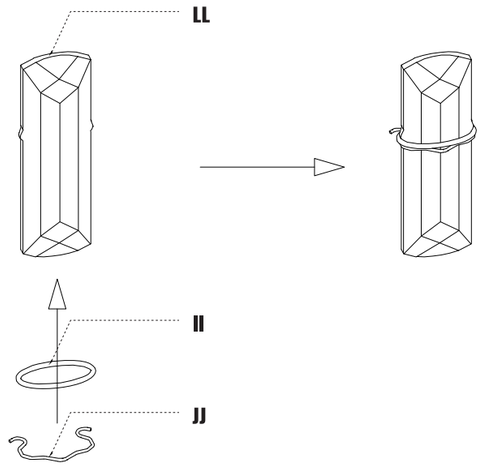

Slide the silicone elastic ring (II) and fastener (JJ) onto a position slightly above the middle of the long crystal (KK).

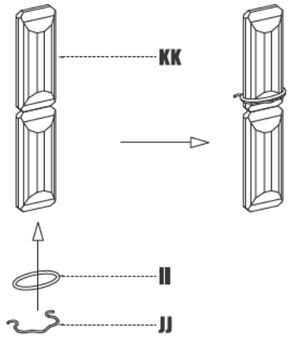

Insert the long crystals (KK) and short crystals (LL) alternately onto the fan assembly (A).

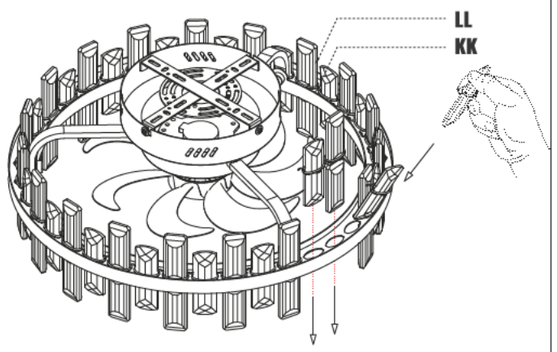

REMOTE CONTROL INSTRUCTIONS

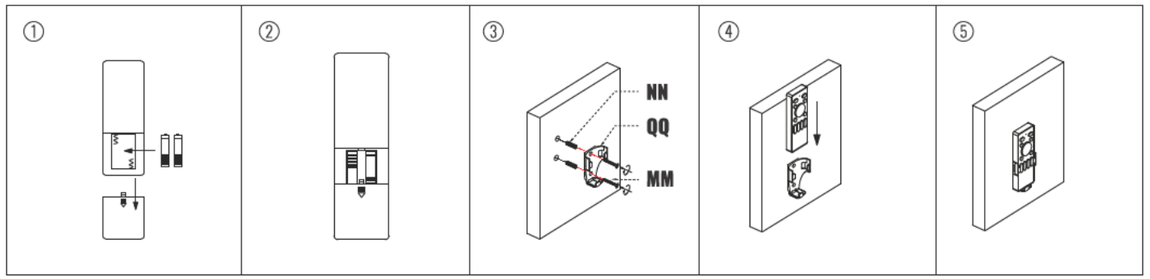

1. Insert 2 batteries before using: AAA 1.5V battery x 2pcs (not included).
2. Mark and drill screw holes in the wall, then insert the remote holder anchors (NN).
3. Use short wood screws (MM) to fix the remote holder (QQ) onto the wall.

REMOTE CONTROL INSTRUCTIONS

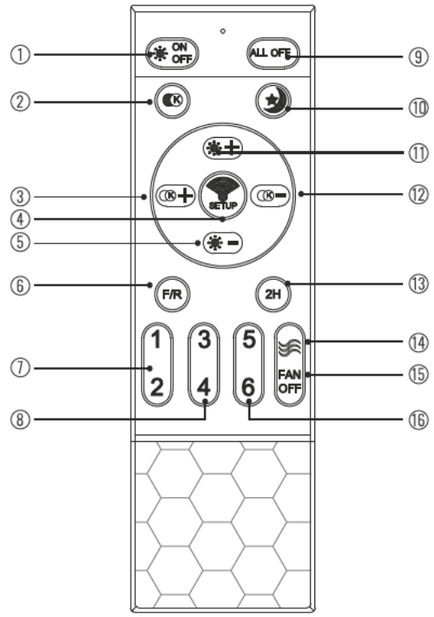

① Turn on/off the light.

② Quick switch of the light color: Yellow Light→White Light→Natural Light

③ ⑫ Adjust the light color temperature.

④ SETUP: remote signal pairing.If the remote control loses signal of the fan, press and hold this button at the very beginning after it's powered on from wall switch. After the fan flashes or beeps, it's paired successfully.

⑤ ⑪ Adjust the brightness of the light.

⑥ Fan moves forwards or reversely.

⑦ ⑧ ⑯ Fan speed.

⑨ Turn off fan and light.

⑩ Night mode, lights will be dimmed when press this button.

⑬ Timing for 2 hours for the fan.

⑭ Natural wind of the fan, fan speed will change automatically when use this function.

⑮ Turn off the fan.

NOTE:

Please insert 2 batteries before using. AAA 1.5V battery x 2pcs (not included).

APP CONTROL INSTRUCTIONS

NOTE: Scan the QR code and install the APP in your phone, or search and install "FanLamp Pro" from Google Play, Apple App and other APP stores. Make sure your phone is connected to the internet and bluetooth enabled.

Pairing: Click the pair button within 5 seconds after turning on the fan from the wall switch. Once the fan flashes or beeps, it has been successfully paired with your phone and can now be controlled through the app.

Slide the slider to change the fan speed.

Slide the slider to change the brightness of the light.

Quick switch for "White" light color.

Quick switch for "Yellow" light color.

Quick switch for "Natural" light color.

Night mode: Dim the lights.

Fan moves forward.

Fan moves reversely.

Change the direction of the wind. (Not supported)

Timing the fan.

Natural wind: The fan speed will change automatically when you use this function.

Sleeping wind. (Not supported)

Turn on/off the light.

Turn on/off the fan.

Unpairing: Click the unpair button within 5 seconds after turning on the fan. Once the fan flashes or beeps, it has been successfully unpaired from your phone.