Drawers Cabinet
Installation Instructions

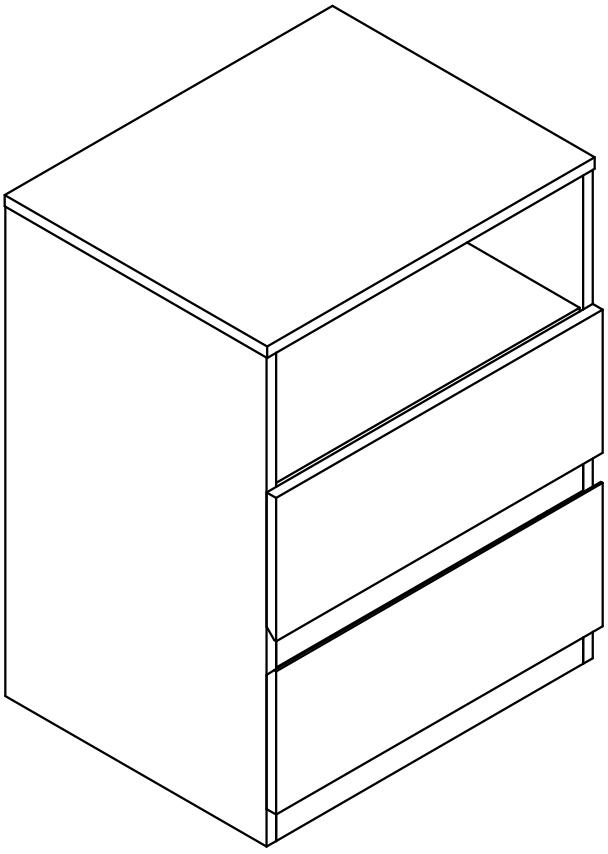

#SC002C

Contents

Before Use

General Guidelines.....2
Warning.....2
Material Properties.....2
Assembly Instructions.....2
Tools You May Needs.....2

Installation Guide

Parts List.....3
Accessories List.....4
Exploded Views.....5
#B (connector bolt) Installation steps.....7
Incorrect installation.....8
#A (eccentric cam lock) Installation steps.....8
Watch The Installation Video To Assist With Installation.....8
Installation Steps.....9-17

Maintenance & Troubleshooting

Use and Maintenance.....18
Trouble Shooting.....19

After-Sales Warranty.....20

General Guidelines

- Please read the following instructions carefully and use the product accordingly.
- Please keep this manual and hand it over when you transfer the product.
- Product is intended for indoor use only. It must be assembled and used according to the instructions. The seller does not accept any responsibility for damage or injury resulting from improper assembly or use.
- This summary may not include every detail of all variations and considered steps.
- Please contact us when further information and help are needed.

Warning

- Children are not allowed to assemble the product. During assembly, keep any small part out of reach of children as they may be fatal if swallowed or inhaled.
- Children are not allowed to stand, climb or play on the product to avoid serious bodily injury by toppling.
- Keep plastic packing bags out of reach of children to avoid any potential danger, such as suffocation.
- Avoid sharp objects and corrosive chemicals to prevent damage to the product or bodily injury.

Material Properties

1. Solid Wood

Trees will have a unique texture, scar, color and other natural marks during their growth. These elements constitute the natural beauty of wood. After being made into furniture, there will be discoloration when viewed under different light and different angles. That is because different grain minerals and light intensity affect vision, which is a normal phenomenon.

2. Marble and Sintered Stone

The pattern of marble and sintered stone is unique to each piece. Due to the characteristics of the material, there is no guarantee that the pattern of each piece will be consistent with the pattern seen at the time of purchase.

Assembly Instructions

- Read these instructions carefully and keep for future reference. Refer to parts inventory for guidance, and ensure you have all pieces before starting.
- When assembling, place all parts on a soft, clean, and flat surface such as a carpet to prevent scratches.
- During assembly, align all screws with the corresponding pre-drilled holes first and then tighten them one by one.
- Do not discard any contents until after assembly is complete to avoid accidentally discarding small parts or hardware.

Tools You May Needs







- Note: It is recommended that installation of the product be done by a qualified licensed furniture assembler.

PARTS LIST

1 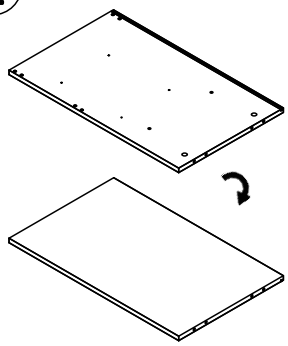	2 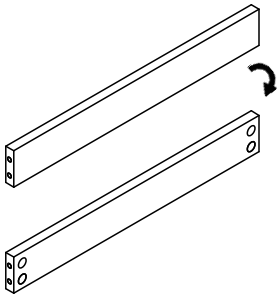	3 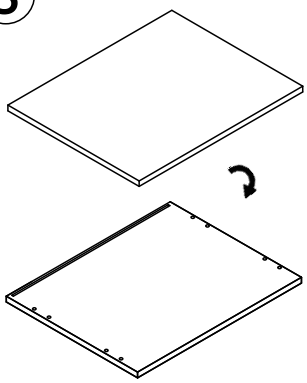	4 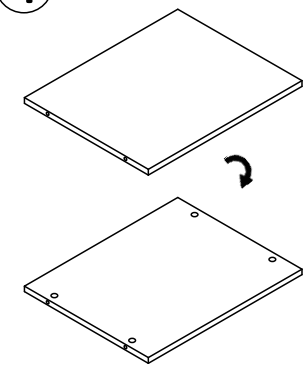
1PC	3PCS	1PC	1PC
5 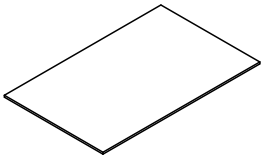	6 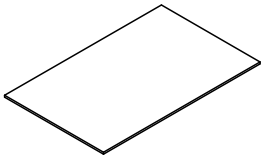	7 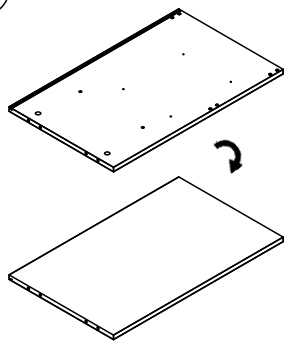	8 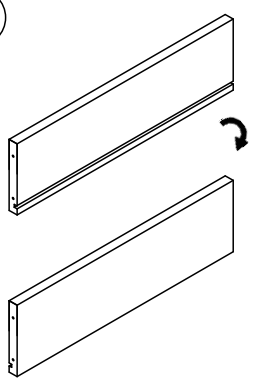
1PC	1PC	1PC	2PCS
9 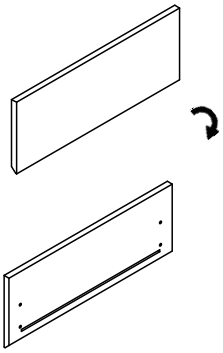	10 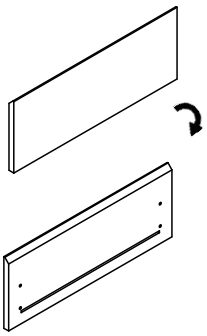	11 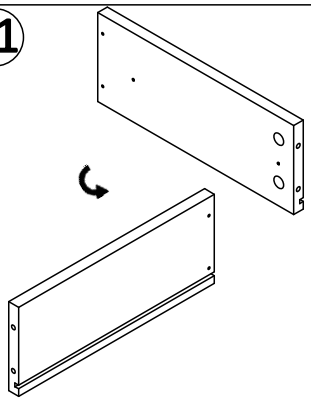	12 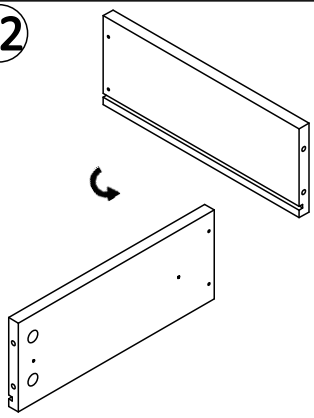
1PC	1PC	2PCS	2PCS
13 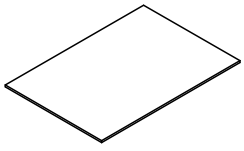			
2PCS			

HARDWARE LIST

A		B		C		E		F	
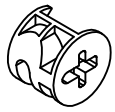		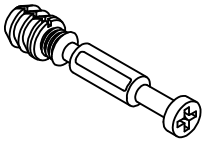		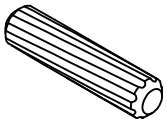					
Ø15*10MM	28PCS	Ø6*35MM	28PCS	Ø8*30MM	4PCS	Ø3.5*35MM	8PCS	Ø3.5*14MM	26PCS

H		K		L	
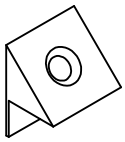		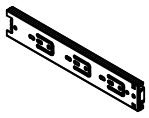		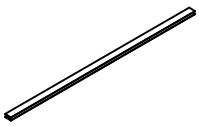	
	4PCS	10"	4PCS		1PC

- The number in the upper left corner indicates the panel code, and the number in the lower middle indicates the quantity.
- As some panels feature holes on both sides, both front and back views are provided accordingly in the parts list.
- If you encounter any missing or damaged panels, please contact us immediately at ATJafurn@outlook.com. We will prioritize resolving your issue promptly.

Exploded Views

Each wooden board has an number sticker. Match them one-by-one according to the steps in the assembly manual.

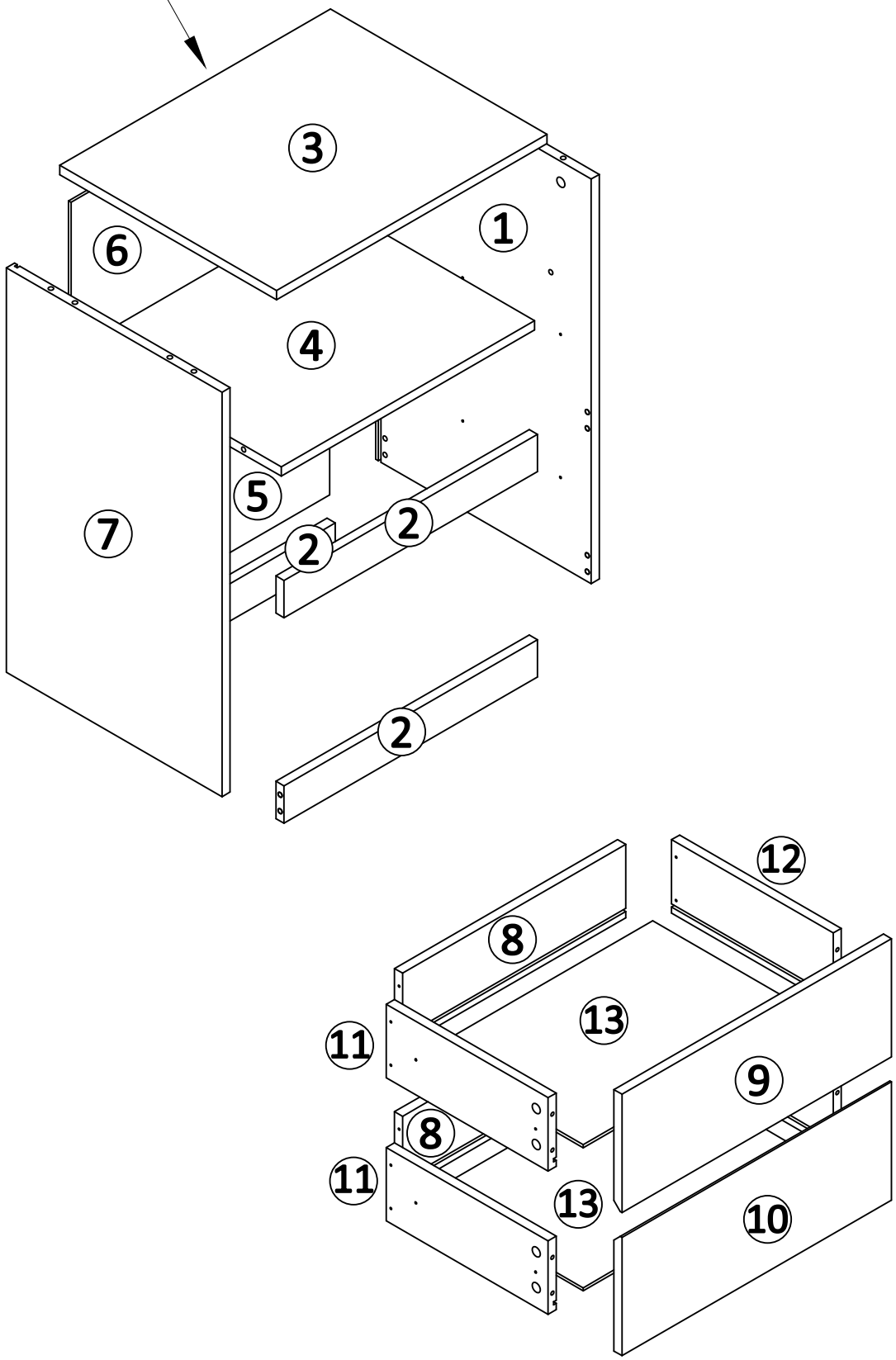

#B (connector bolt) Installation steps

Step 1

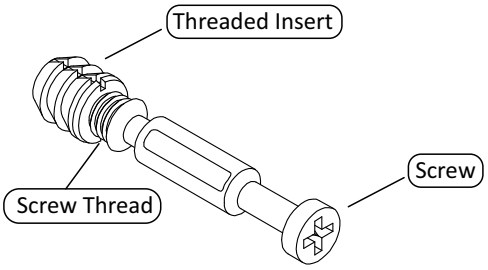

1. The structure of #B (connector bolt) is divided into threaded Insert and screw.
Preparation: Please note that the threaded insert and screw do not need to be tightened; two-thirds of the threads should be exposed.

Step 2

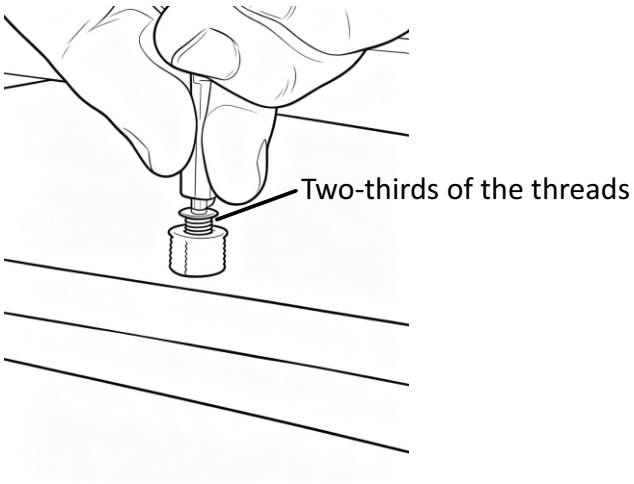

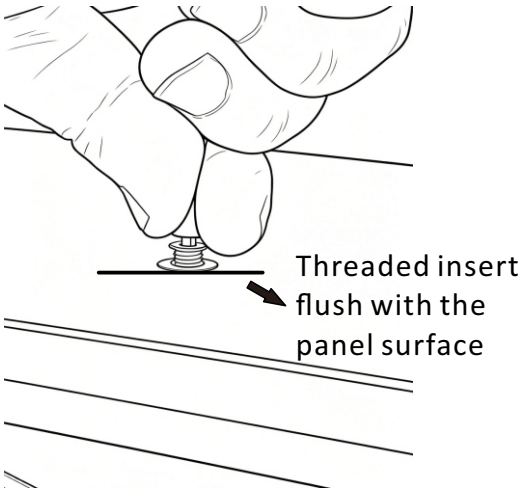

2. Insert #B (connector bolt) into the hole by hand. Initially, insert the threaded insert (left image). The threaded insert must be flush with the panel surface, with part of the screw exposed (right image).

Step 3

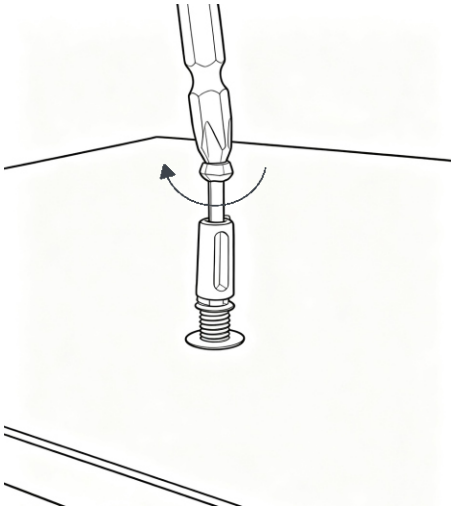

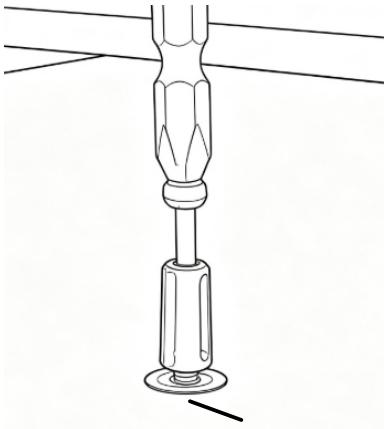

When the threaded insert is flush with the panel, #B is already installed.

3. Use a screwdriver to drill the screw in until the threads disappear. Complete the installation of #B (connector bolt).

Incorrect installation

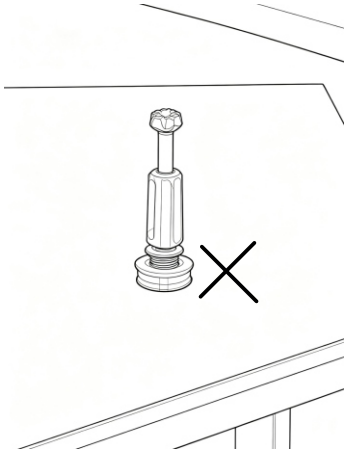

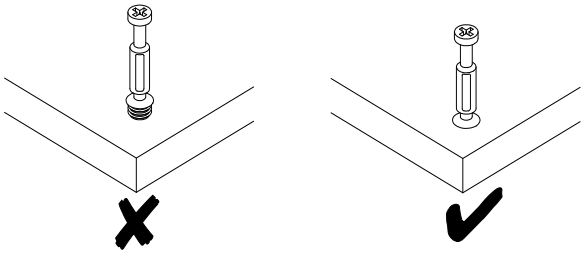

Incorrect Example: In step 2, when inserting the threaded insert, it wasn't fully inserted, not flush with the panel, and a small crack may appear around the hole.

Cause of Error: The thread length between the threaded insert and the screw is too short (less than two-thirds), preventing it from being inserted properly. Forcing it in will break the panel (left image).

Solution: Unscrew the screw slightly to leave sufficient thread length, then repeat steps 2-3.

#A (eccentric cam lock) installation steps

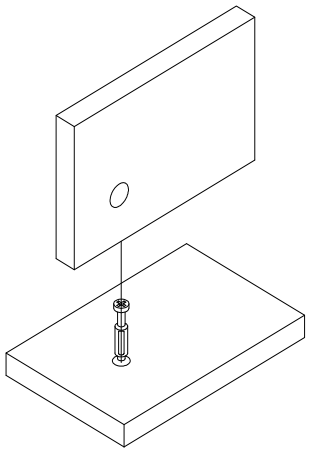

After installing #B (connector bolt), connect the panels to each other.

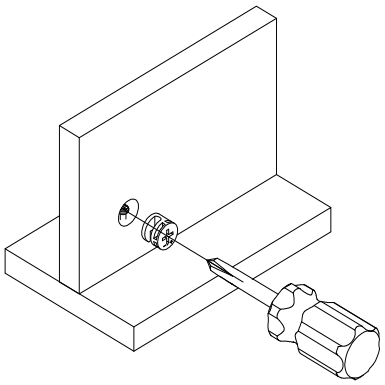

Align the arrow of the eccentric component with the screw rod.

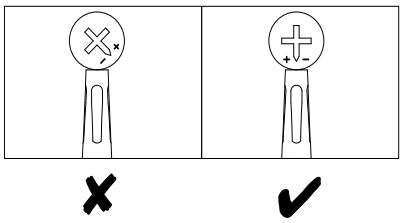

Pay attention to aligning the arrow of the eccentric part with the screw rod.

Watch The Installation Video To Assist With Installation

Attention!

Some steps may not be displayed intuitively on the paper manual, so we filmed the installation video. Please **use the camera APP to scan the QR code** to our brand website to watch the video. The website will not charge and will not record your personal information, so please feel free to use it.

Step 1

B 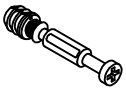 X28

As shown in the diagram, screw #B (connector bolt) into the corresponding holes of the panels 1/3/7/9/10 .

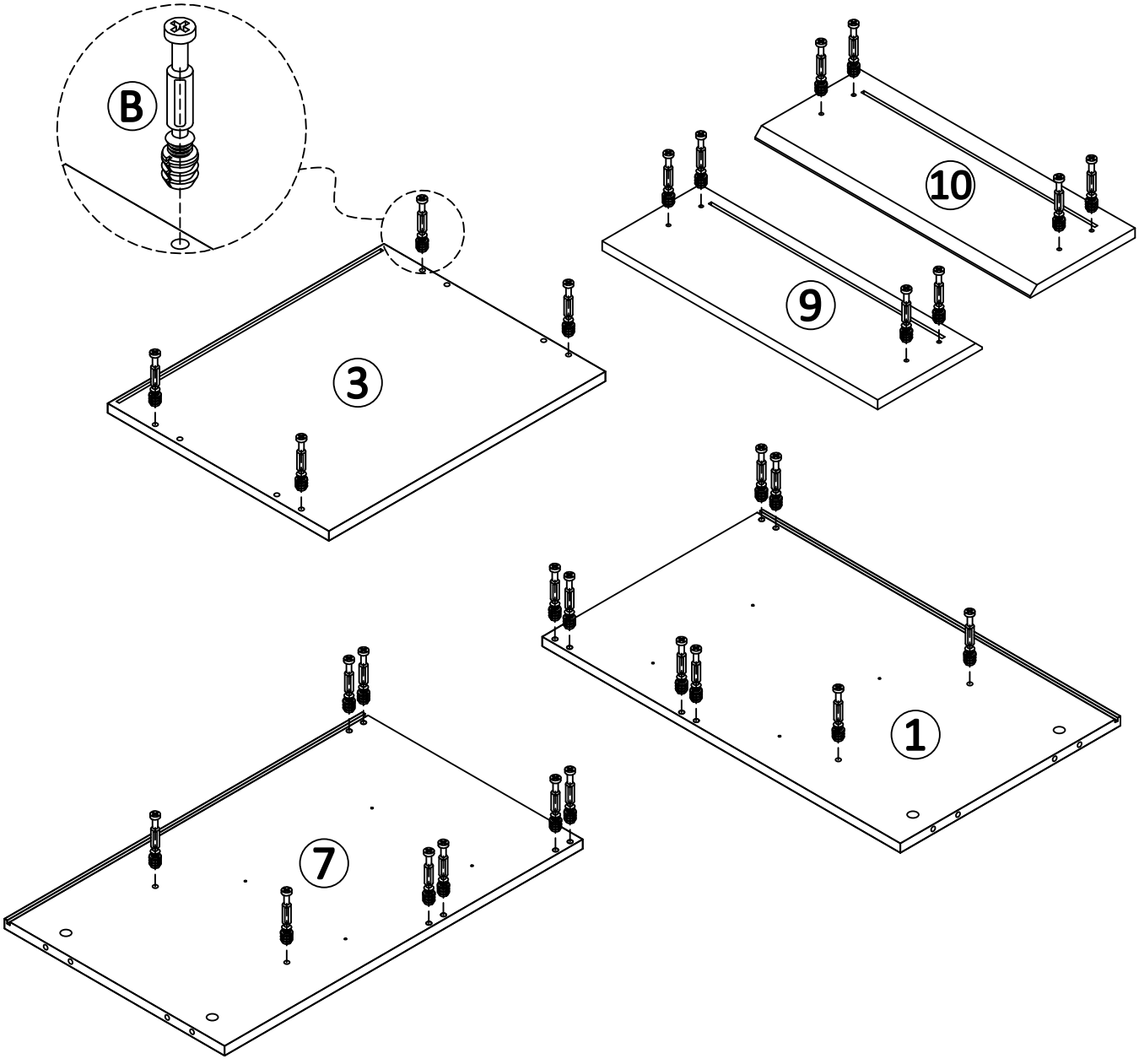

Step 2

Divide the guide rail K into two parts, K1 and K2.

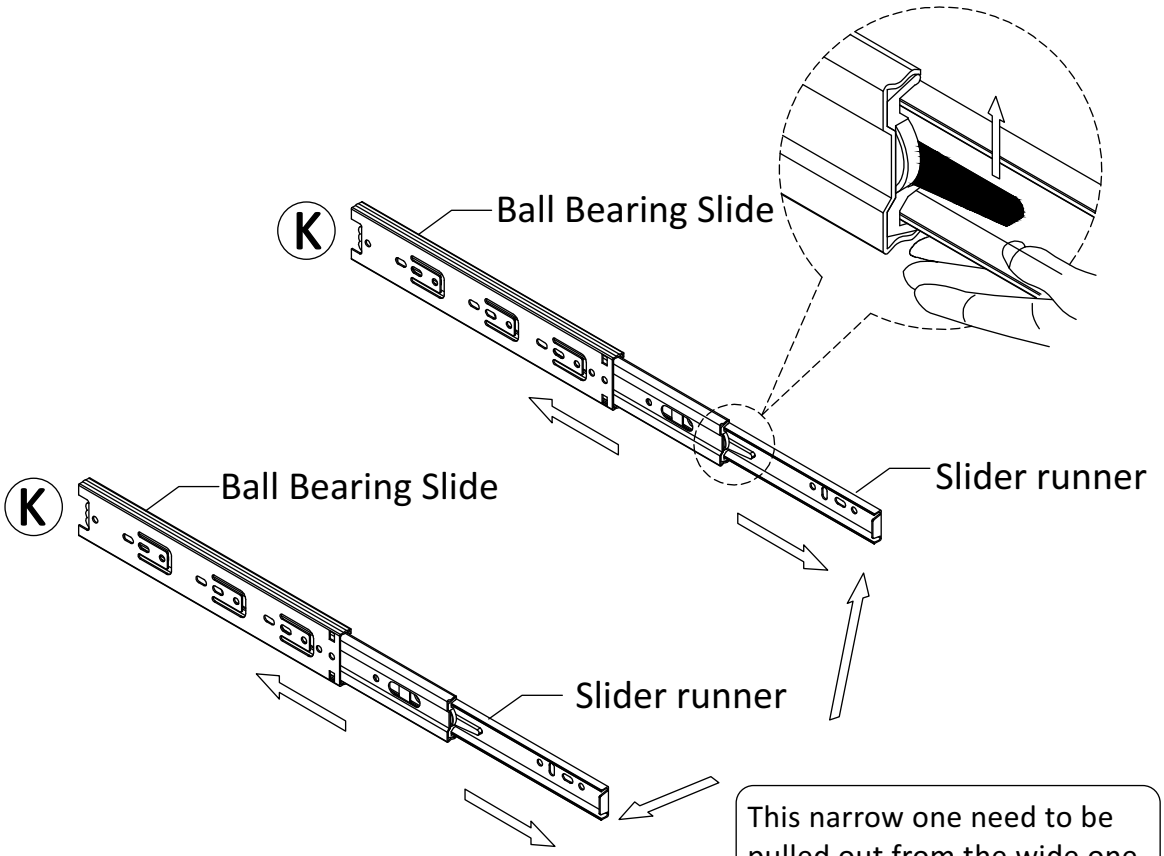

This narrow one need to be pulled out from the wide one. It is installed on the side panel of drawers.

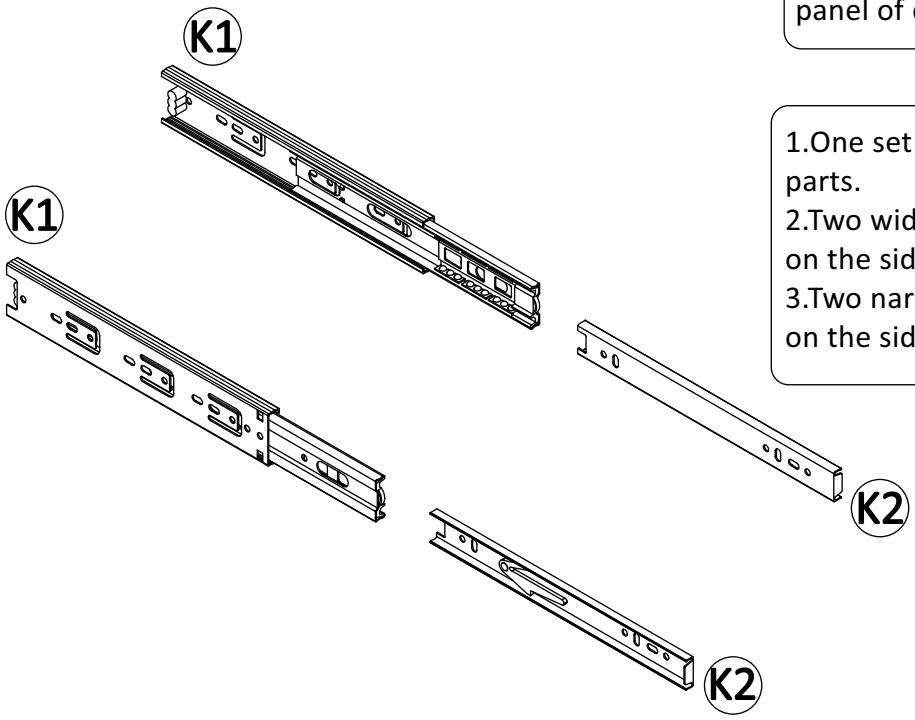

1.One set of guide rail should be four parts.
2.Two wide guide rails are installed on the side panel of the cabinet.
3.Two narrow guide rails are installed on the side panel of drawers.

Attention:
Take care when installing the slide rails as they have been pre-lubricated.

Step 3

As shown: Secure four K1 units to panels 1 and 7 using #F (screws).

F X8

K1 X4

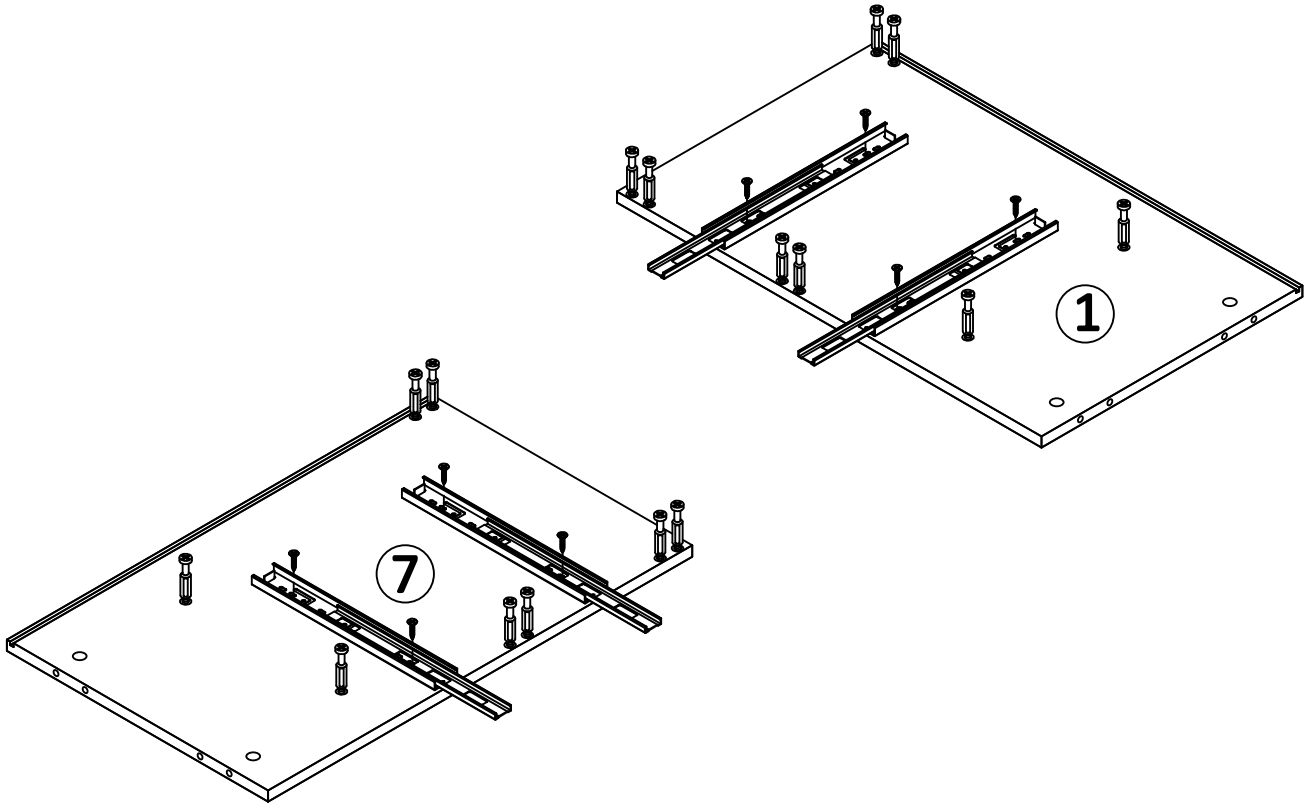

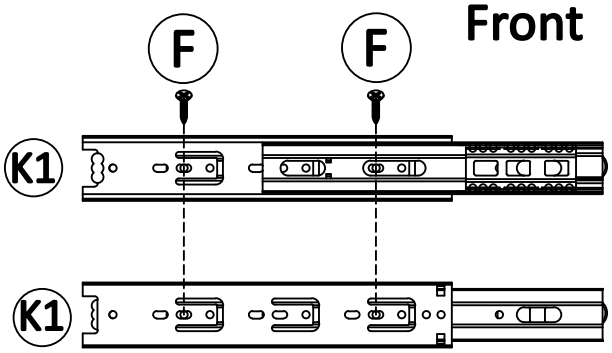

Step 4

Insert panels 2 and 4 into panel 1, then screw in #A (eccentric locks) and tighten.

A X8

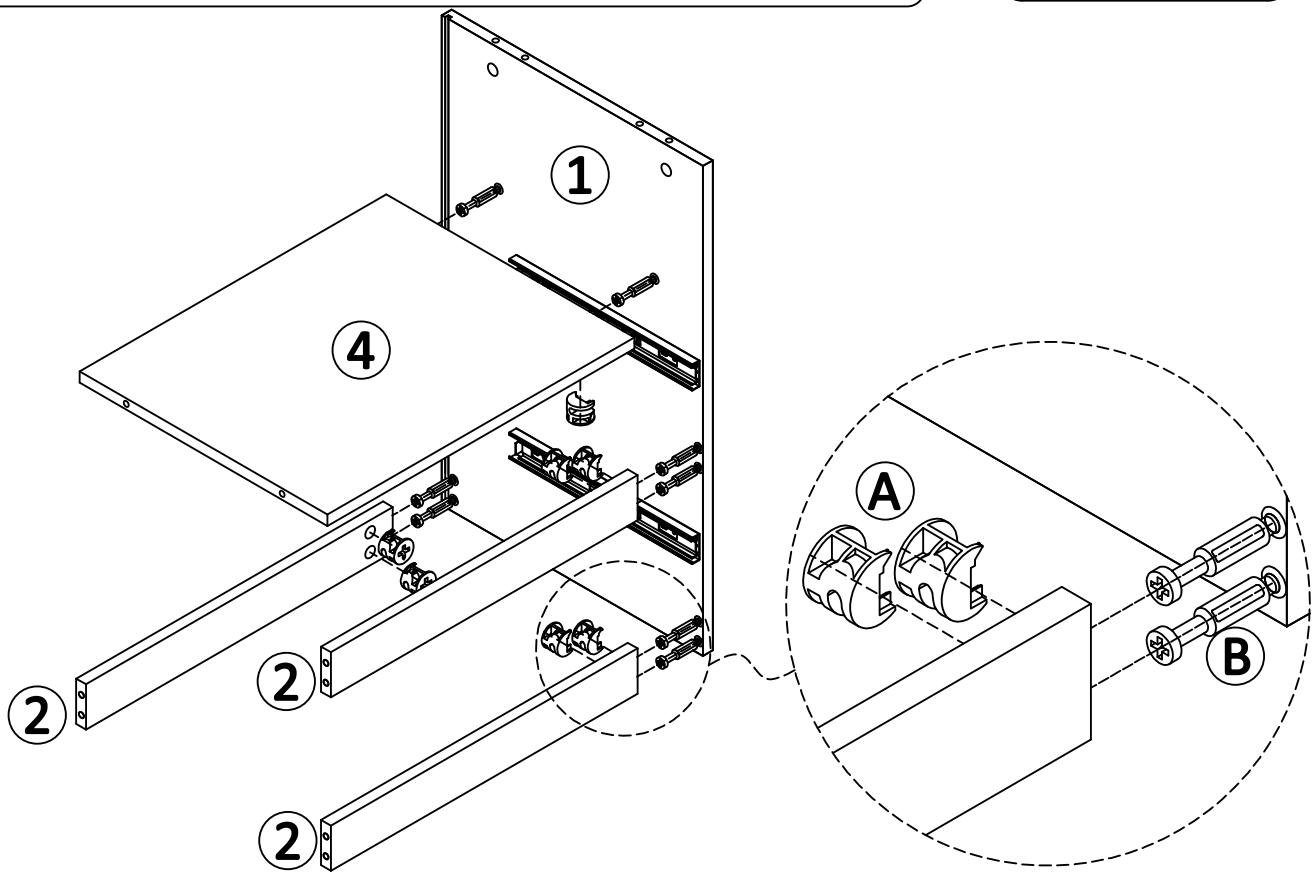

Step 5

Install panel 7 onto the pre-assembled structure, then screw in #A (eccentric locks) and tighten.

A X8

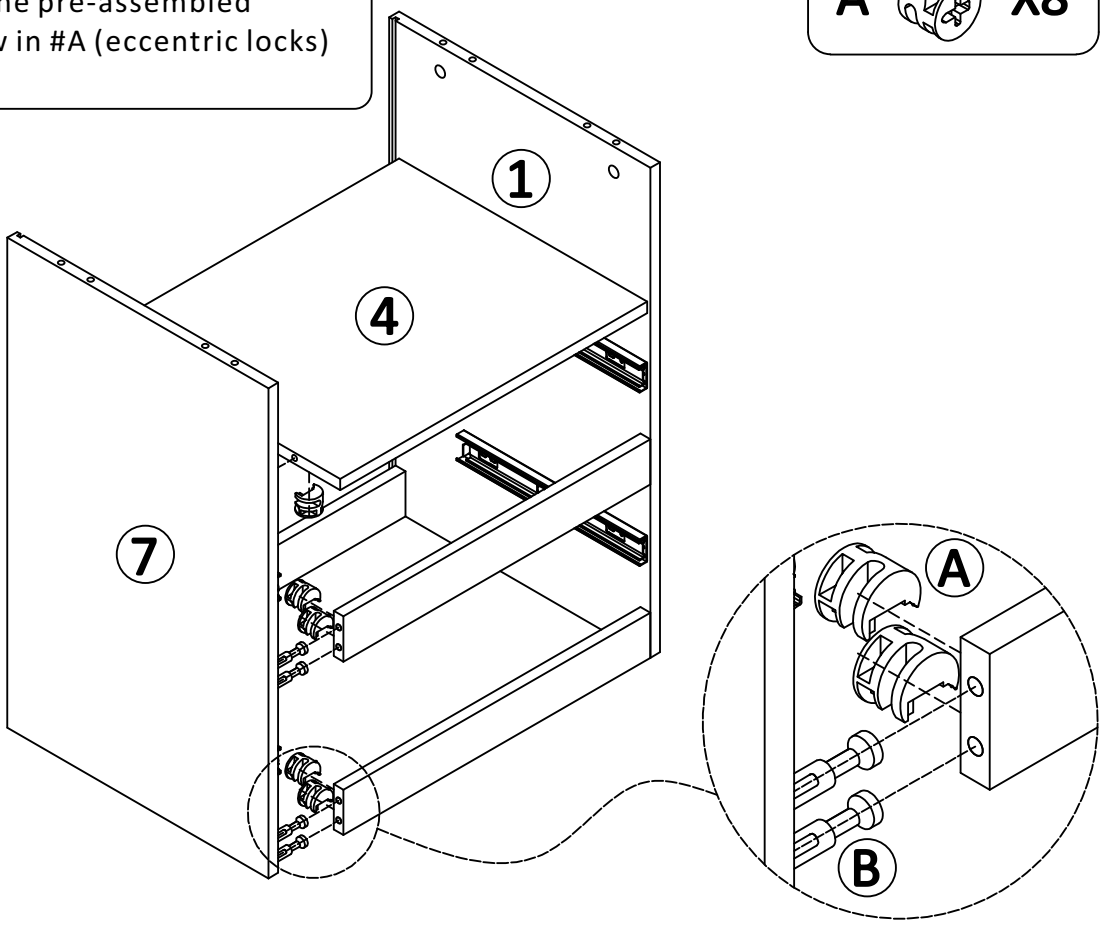

Step 6

1. Insert #C (wood dowel pins) into the holes on the top of the assembly;

2. Assemble panel 3 onto it;

3. Finally, install and tighten #A (eccentric locks) to complete the fixation.

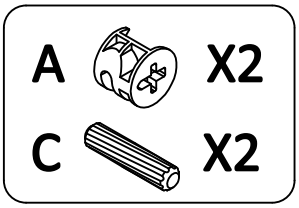

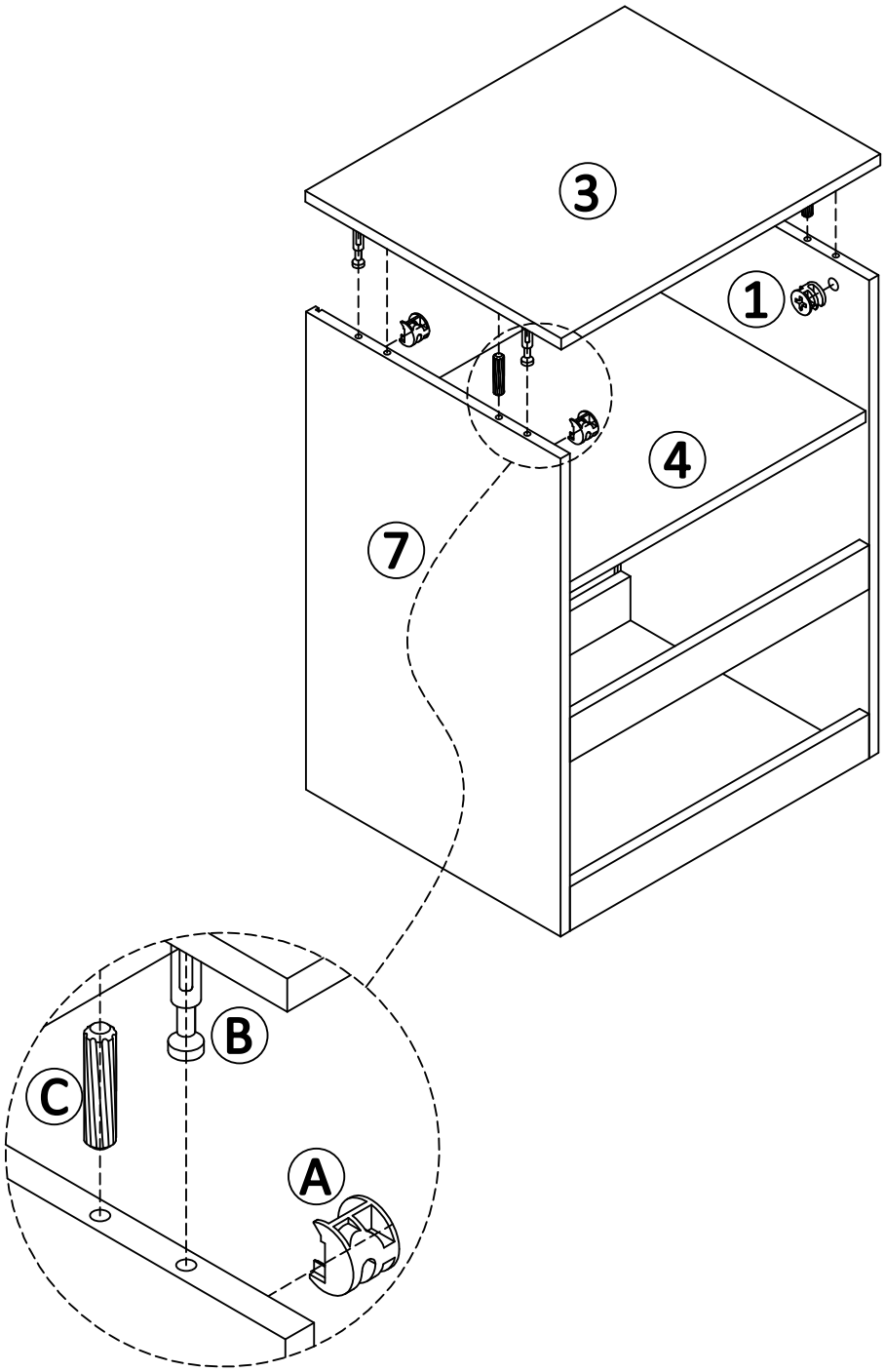

Step 7

1. Insert panel 5 / #L (accessory) / panel 6 into the grooves on the back of the drawers cabinet in sequence.

2. Screws #F into the two pre-drilled holes on panel 5 to secure the back panel.

3. Then insert #H (accessories), screw in #F and tighten.

F X6

H X4

L X1

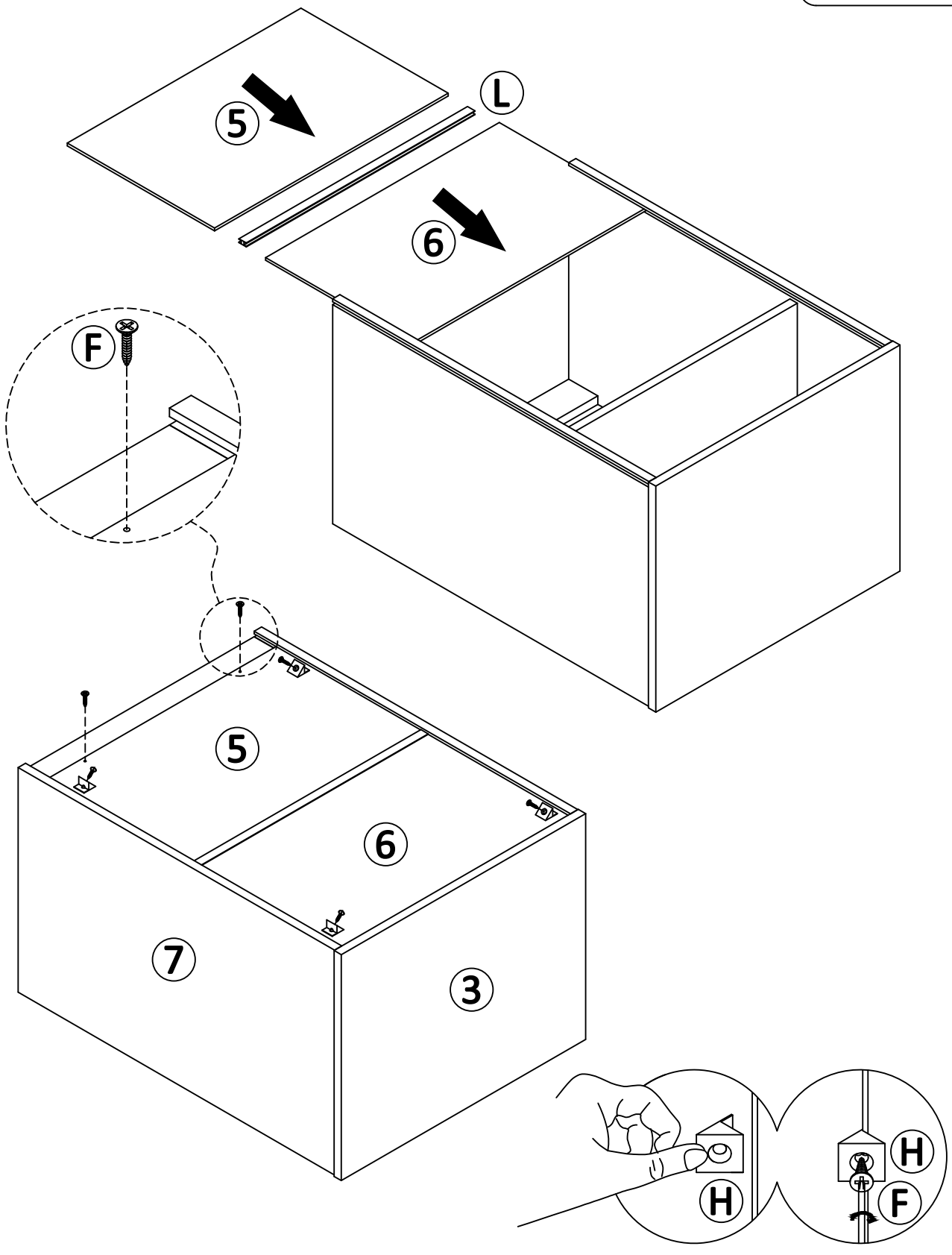

Step 8

E  X8

Drawer Assembly:

Using #E (screws) secure panel 11 and panel 12 to both sides of panel 8, ensuring the grooves are aligned in the same direction.

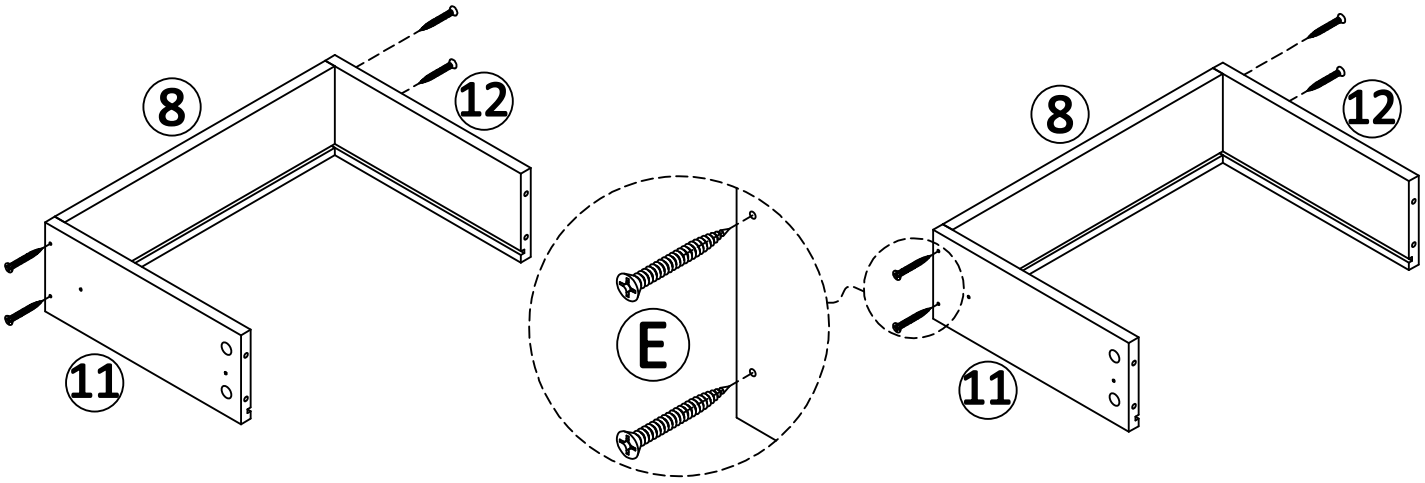

Step 9

Snap panel 13 into the groove. This installation process needs to be performed twice.

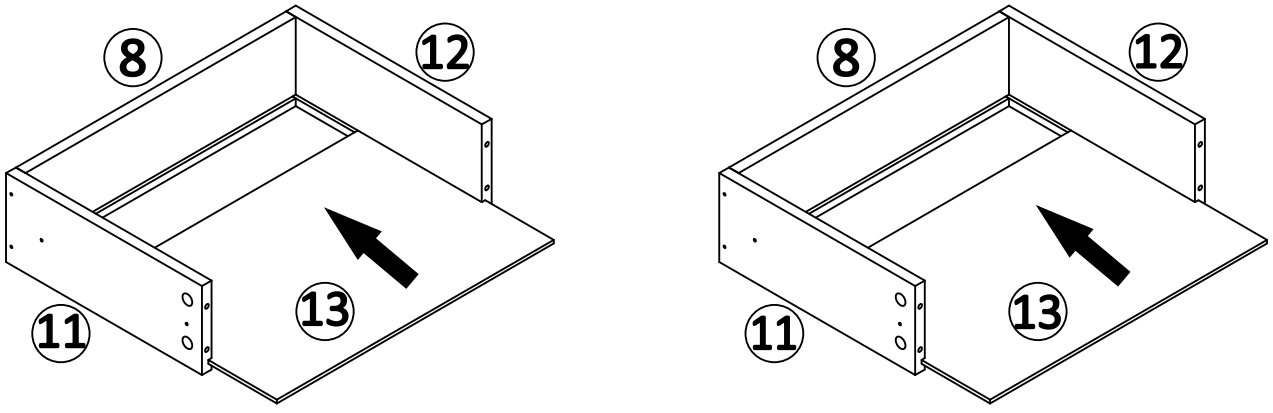

Step 10

A  X8

Install panel 9/10 (drawer front) to the pre-drawer assembly and secure it by screwing #A (eccentric locks) into the side mounting holes.

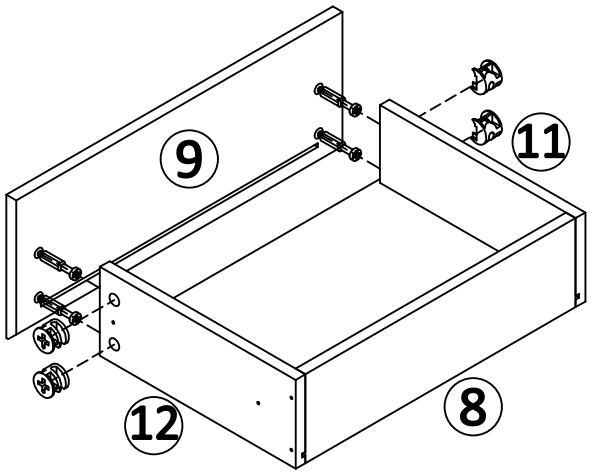

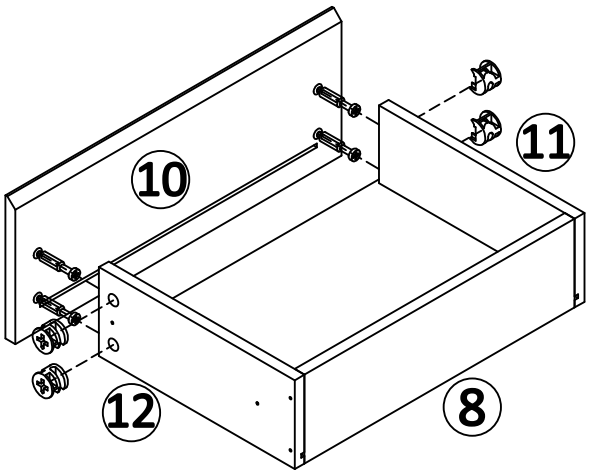

Step 11

F  X8

K2  X4

Attach the #K2 to both sides of the drawer using the #F (screws).

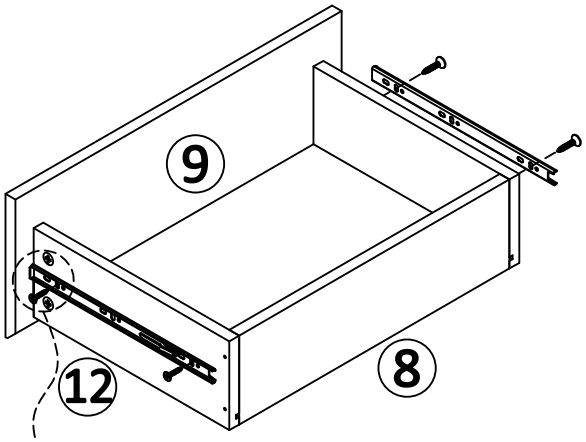

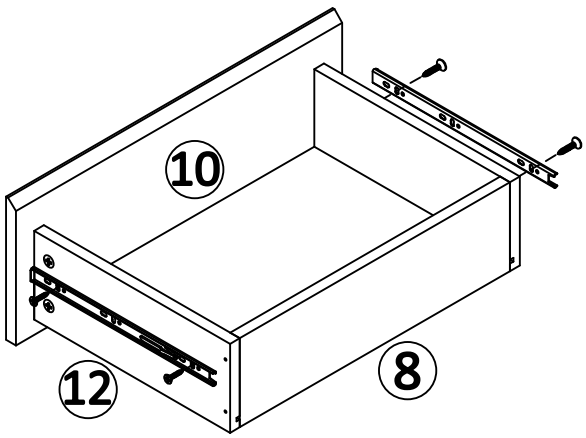

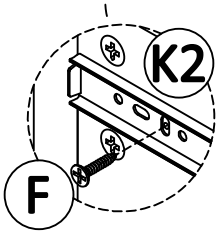

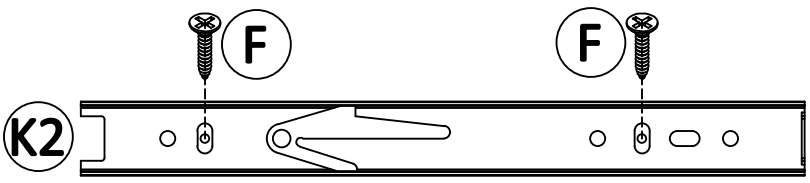

Step 12

As shown in the diagram, please install the drawers in the correct order.
Slide the drawer with the installed inner rails into the corresponding slots in the cabinet until it clicks into place.

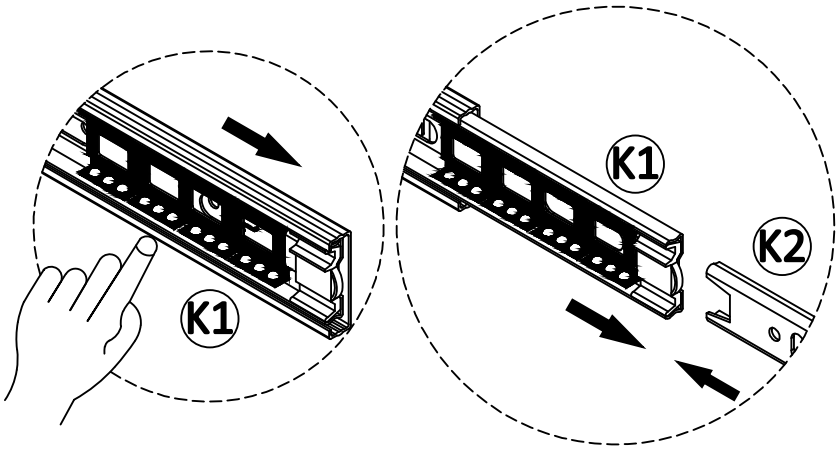

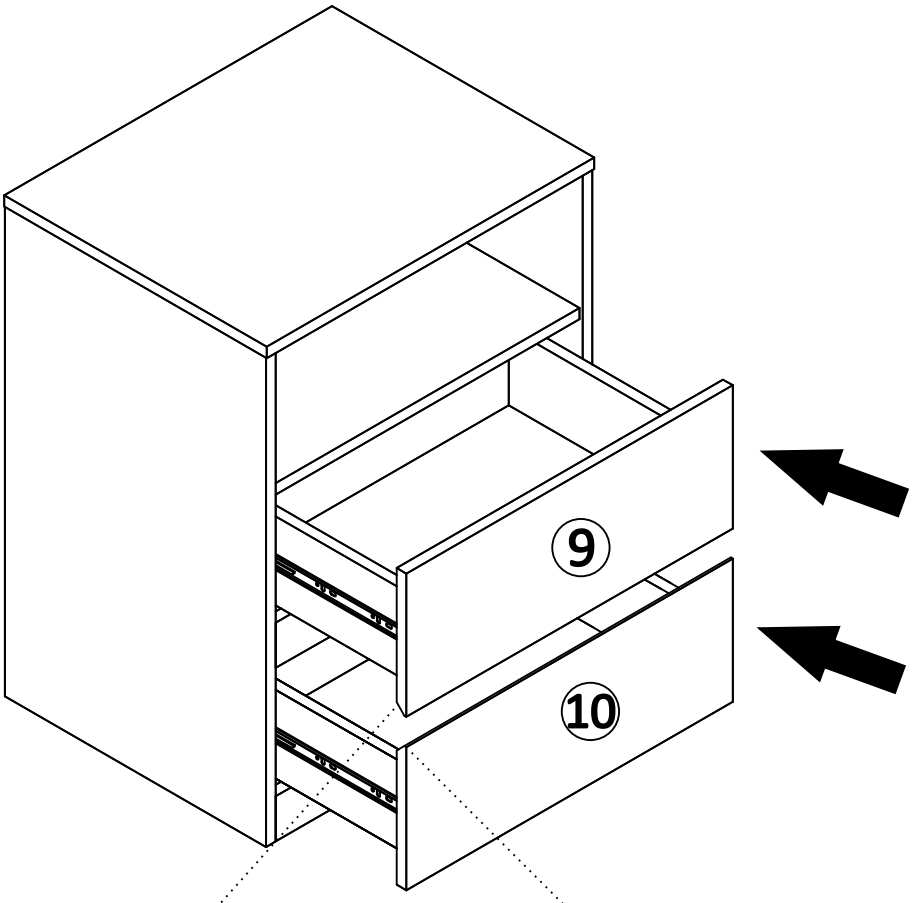

Install the panel 9 drawer assembly at the top position (with beveled edge facing downward).

And install the panel 10 drawer assembly at the bottom position (with beveled edge facing upward).

Assembly Completed

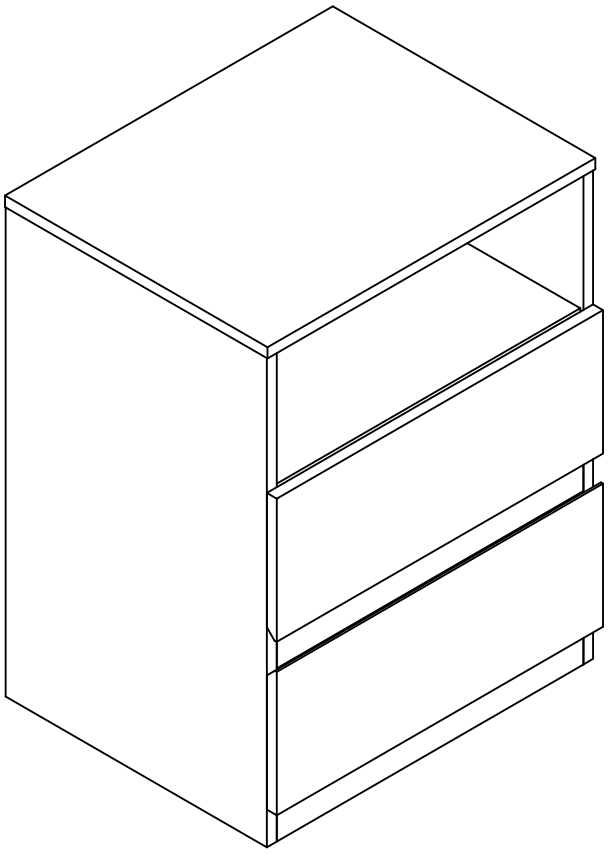

Use and Maintenance

1. Keep the furniture vacant for half a month before use, and maintain good indoor ventilation to eliminate the residual odor in furniture surface coating.

2. Place the objects smoothly, heavier objects should be placed at the bottom (layer) of the furniture to avoid the furniture from tipping over. Heavy objects should not be placed on the top of the wardrobe, so as not to cause the top plate to deform and sag and affect the opening of the cabinet door, high-temperature or frozen objects should be padded with high-termperature-resistant mats and placed on the furniture. Heavier or harder objects should be placed on the furniture table with a soft decorative tablecloth or a felt for protection.

3. Do not push hard objects directly on the furniture to avoid scratching the surface of the furniture.

4. Do not expose the furniture to sunlight for a long time or place the furniture close to the heating equipment, which can cause localized discoloration and fading.

5. Please avoid long-term exposure to humid environment to prevent mildew.

6. Place the furniture stably to avoid breaking the furniture feet or loosening the connection parts due to inclination.

7. Do not let items that are flammable and oxidizing touch the surface of the furniture, which may cause chemical reactions and damage to the furniture finishing.

8. Teach children not to play close to the glass sharp angles of furniture avoid accidental physical injury and damage to the furniture.

9. Open the doors and drawers of the furniture with appropriate force, and it is strictly for bidden to open and close them violently, which will cause loose connections.

10. Screws may become loose during long-term use. If necessary, retighten them to ensure stability and security.

Trouble Shooting

Product Category	Fault	Cause Analysis	Handing Method
Wood furniture	Door opening is not flexible	The furniture is not leveled	Use items to level the furniture
		The door hinges should be adjusted properly.	Adjust door hinges and apply lubricating oil
	Inflexible opening of drawer	Overload or deformation	Reduce weight, adjust guide rails, lubricate
	Loose component connection	Loose hinges or screws	The poke part should be coated with an appropriate amount of 502 glue, then re-install or tighten the screws.
	Minor scratches	Friction with hard or sharp objects	Use a brush to apply similar pigment ink along wood grain to the scratches, then wipe off the excess.
	Corrosive stains	Accidentally stained with chemical solvents such as nail polish, nail polish remover, etc.	Wipe them with a dry cotton cloth immediately

Possible issues during assembly:

- The two boards can't be aligned at the same level.

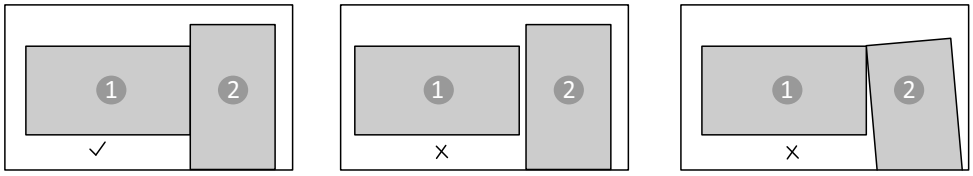

- Holes on the bards and poles are not aligned, so screws can't be installed.

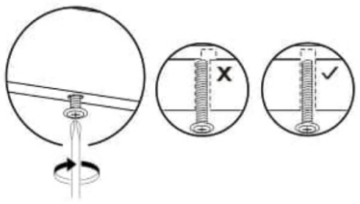

Recommended solution:

- Please sightly loosen all screws and adjust the bards. Because the diameter of the holes on the pipes 23 mm lager than that of bots, the position of the boards can be adjusted.

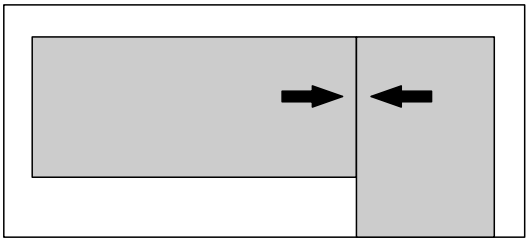

- It is still doesn't work after adjustment, please contact us for more solutions.

After-Sales Warranty

Dear Customer,

Thank you for purchasing this Drawers Cabinet. If you find that the product is damaged or accessories are missing after receiving it, please contact us through our after-sales email. Our customer support team will provide you with a professional solution within 24 hours.

After-sales email: ATJafurn@outlook.com

If you encounter any problems with the product, accessories, installation, or damage after receiving your package, you can also scan this QR code to submit your issue and relevant pictures. This will allow us to quickly understand your difficulties and provide prompt replacement parts and professional guidance. We look forward to receiving any feedback from you!