TWIN/FULL/QUEEN/KING BED
ASSEMBLY INSTRUCTIONS

BOX #1

A. HEADBOARD/ FOOTBOARD 2 PCS

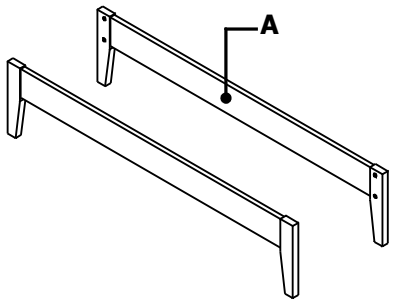

BOX #2

B. SIDE RAIL 2 PCS
C. CENTER SLAT 1 PC
D. SUPPORT LEG 4 PCS
BED HARDWARE BOX*

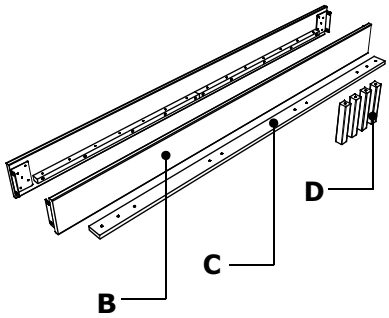

BOX #3

E. SLAT ROLL 1 SET

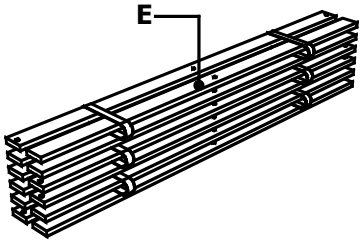

BED ASSEMBLED

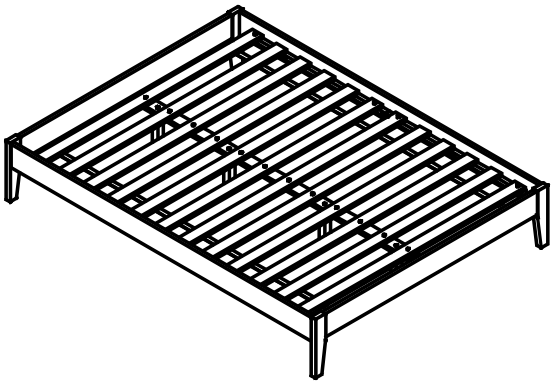

BED HARDWARE PACKED IN BOX #2

1	PHILLIPS HEAD BOLT(8x20mm)	8 PCS	2	SPRING WASHER (M8)	8 PCS	3	FLAT WASHER (M8)	8 PCS
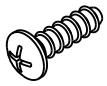								
4	ALLEN BOLT (6x40mm)	11 PCS	5	WOOD SCREW (8x30mm)	9 PCS	6	ALLEN KEY	1 PC
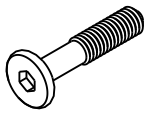						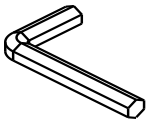		

TOOL REQUIRED : PHILLIPS HEAD SCREWDRIVER (NOT PROVIDED)

YOUR BOX MAY CONTAIN EXTRA HARDWARE

STEP 1 :

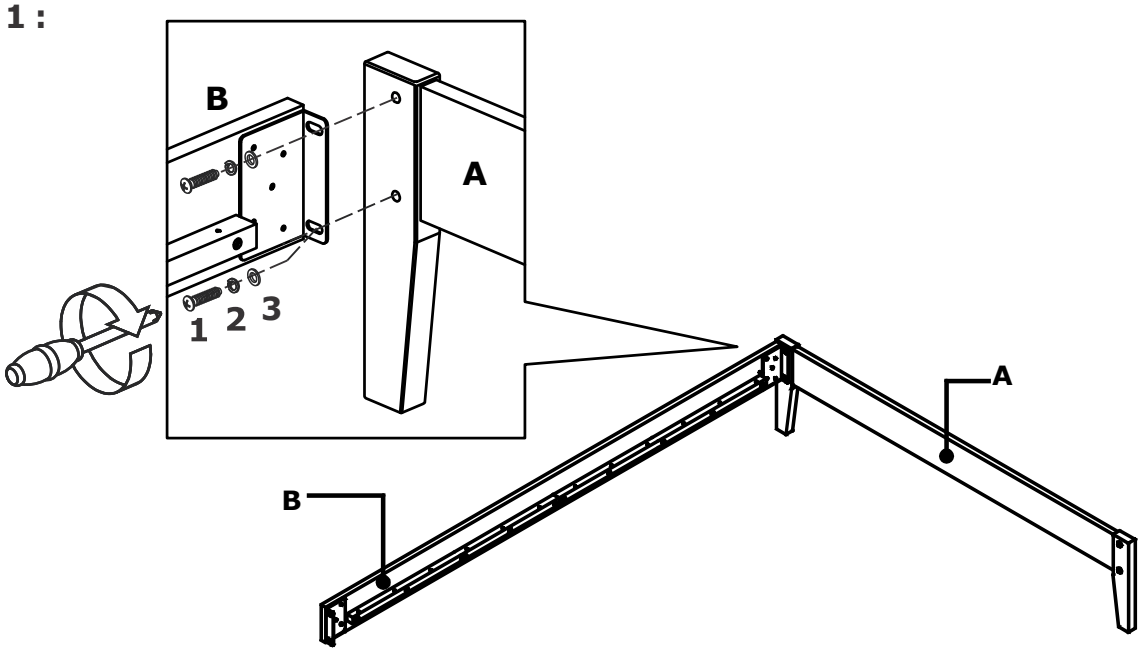

UPDATED : JULY 20TH, 2020

STEP 2 :

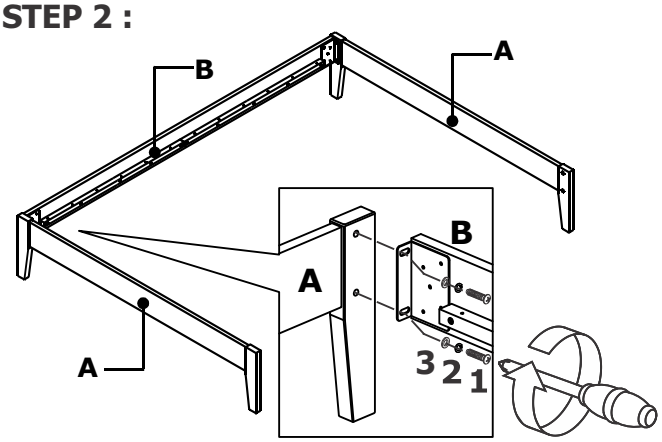

STEP 3 :

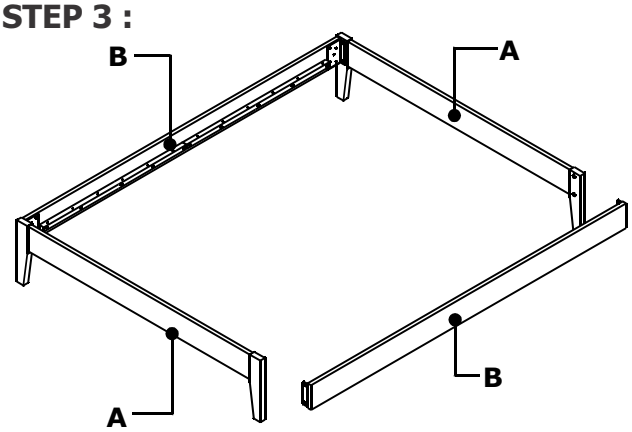

STOP

- IF USING BED FRAME WITH ADJUSTABLE MATTRESS BASE, SKIP TO APPENDIX A: ADJUSTABLE MATTRESS BASE ASSEMBLY SUPPLEMENT.
- IF USING BED FRAME WITH STANDARD BOX SPRING OR FOUNDATION CONTINUE TO STEP 4.

STEP 4 :

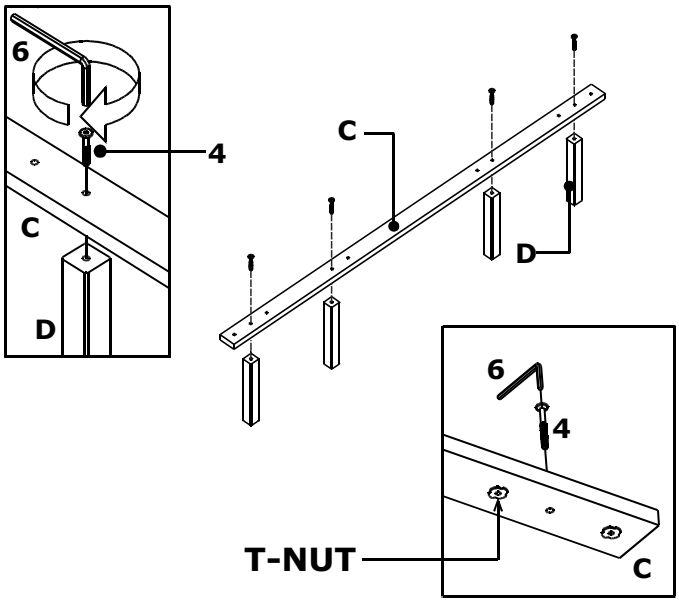

STEP 5 :

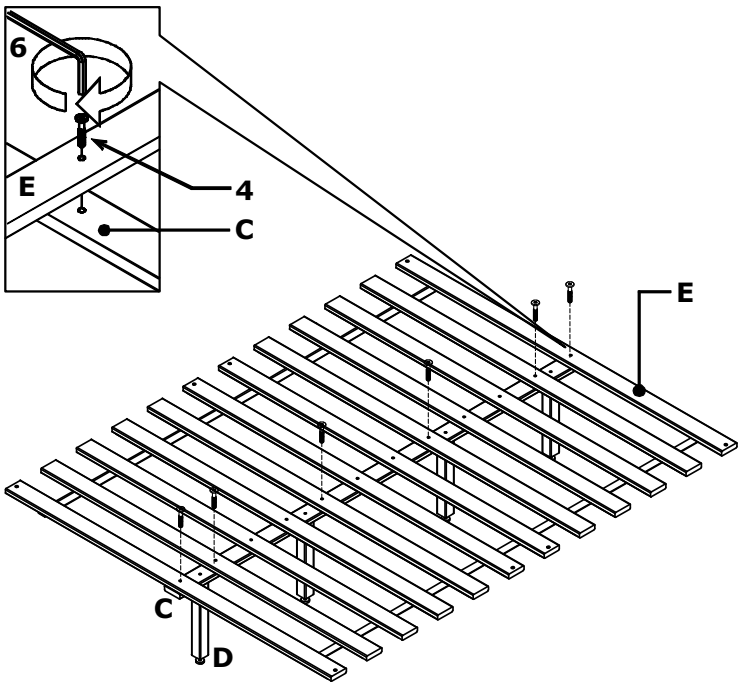

STEP 6 :

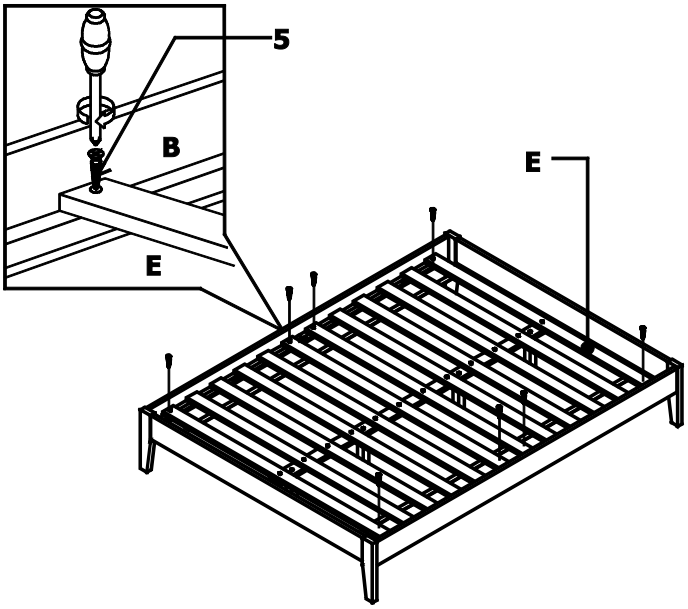

UPDATED : JULY 20TH, 2020

INSTRUCTIONS FOR ADJUSTING LEVELERS:

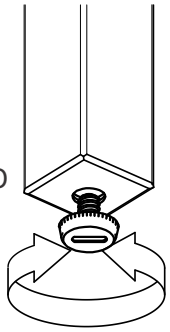

POSITION THE BED IN YOUR ROOM. LOCATE LEVELERS UNDER EACH SUPPORT LEG (**D**).

TURN LEVELERS COUNTER-CLOCKWISE TO EXTEND, CLOCKWISE TO RETRACT.

ADJUST LEVELERS UNTIL EACH SUPPORT LEG IS APPLYING EQUAL UPWARD PRESSURE ON THE CENTER SLAT.

MAINTENANCE INSTRUCTIONS:

- REMOVE BOX SPRING AND MATTRESS BEFORE MOVING YOUR BED.
- LIFT YOUR BED WHEN MOVING IT. DRAGGING CAN DAMAGE THE SUPPORT LEG.
- READJUST LEVELERS AFTER MOVING YOUR BED.

TWIN/FULL/QUEEN/KING BED

APPENDIX A: ADJUSTABLE MATTRESS BASE ASSEMBLY SUPPLEMENT

AN ADJUSTABLE MATTRESS BASE IS A FREESTANDING MATTRESS SUPPORT THAT SITS WITHIN THE PERIMETER OF THE BED FRAME.
IF USING THIS BED FRAME WITH A STANDARD BOX SPRING OR FOUNDATION THESE INSTRUCTIONS DO NOT APPLY.

PRE-ASSEMBLED SIDE RAIL CLEATS OBSTRUCT ADJUSTABLE BASE INSTALLATION AND OPERATION.
FOLLOW THESE INSTRUCTIONS TO REMOVE THEM.

THE FOLLOWING PARTS ARE NOT REQUIRED FOR ADJUSTABLE MATTRESS BASE INSTALLATION:

C. CENTER SLAT	1 PC	4. ALLEN BOLT (6x40mm)	11 PCS
D. SUPPORT LEG	4 PCS	5. WOOD SCREW (8x30mm)	9 PCS
E. SLAT ROLL	1 SET		

STEP 1 :

USE ALLEN KEY **(6)** TO UNSCREW ALLEN BOLTS
AND REMOVE PRE-ASSEMBLED SIDE RAIL CLEATS.

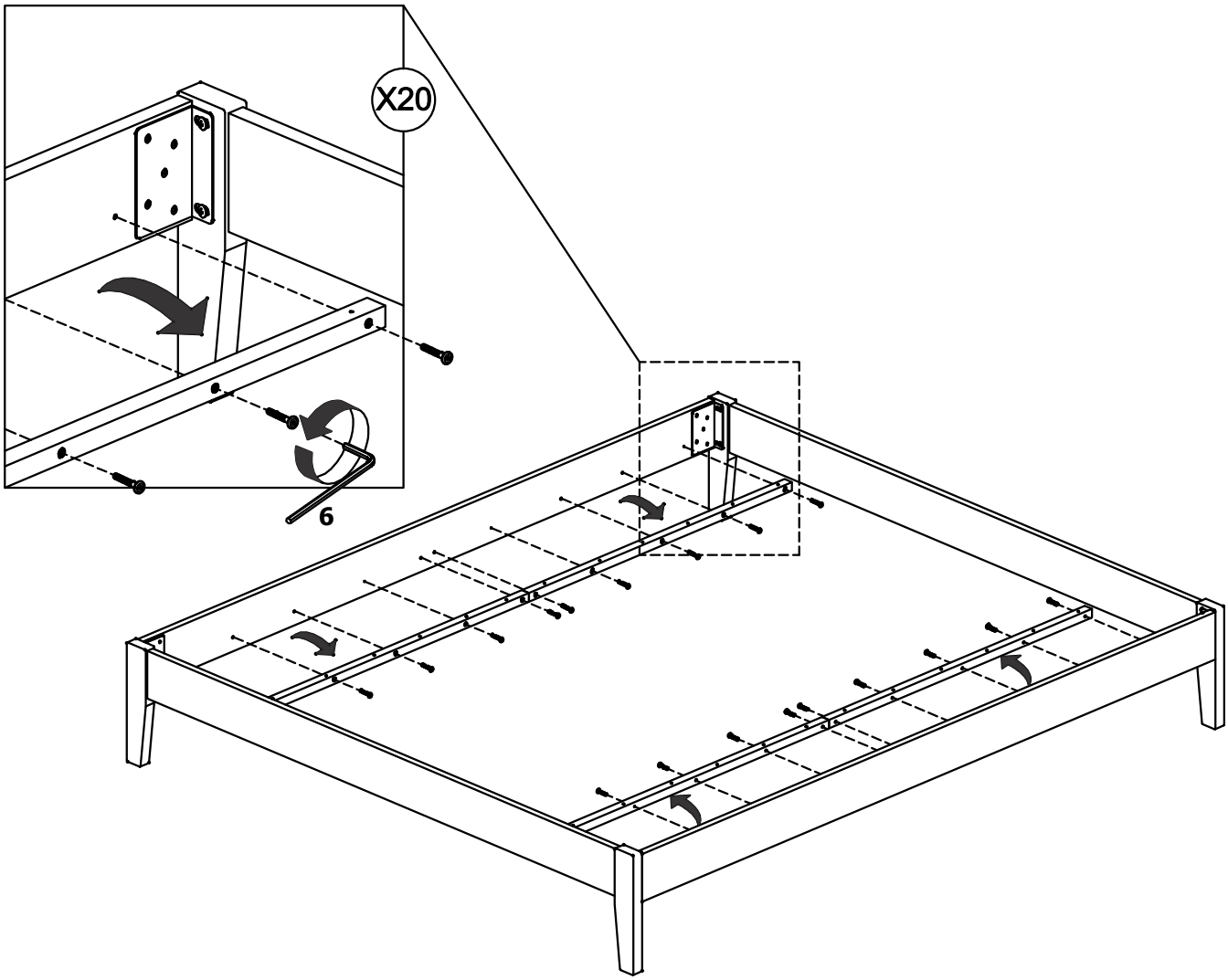

NOTE: YOU MAY WISH TO RETAIN UNUSED PARTS IF IN THE FUTURE YOU INTEND TO USE THE BED FRAME WITH A STANDARD BOX SPRING OR FOUNDATION.

UPDATED : JULY 20TH, 2020