Owner Manual

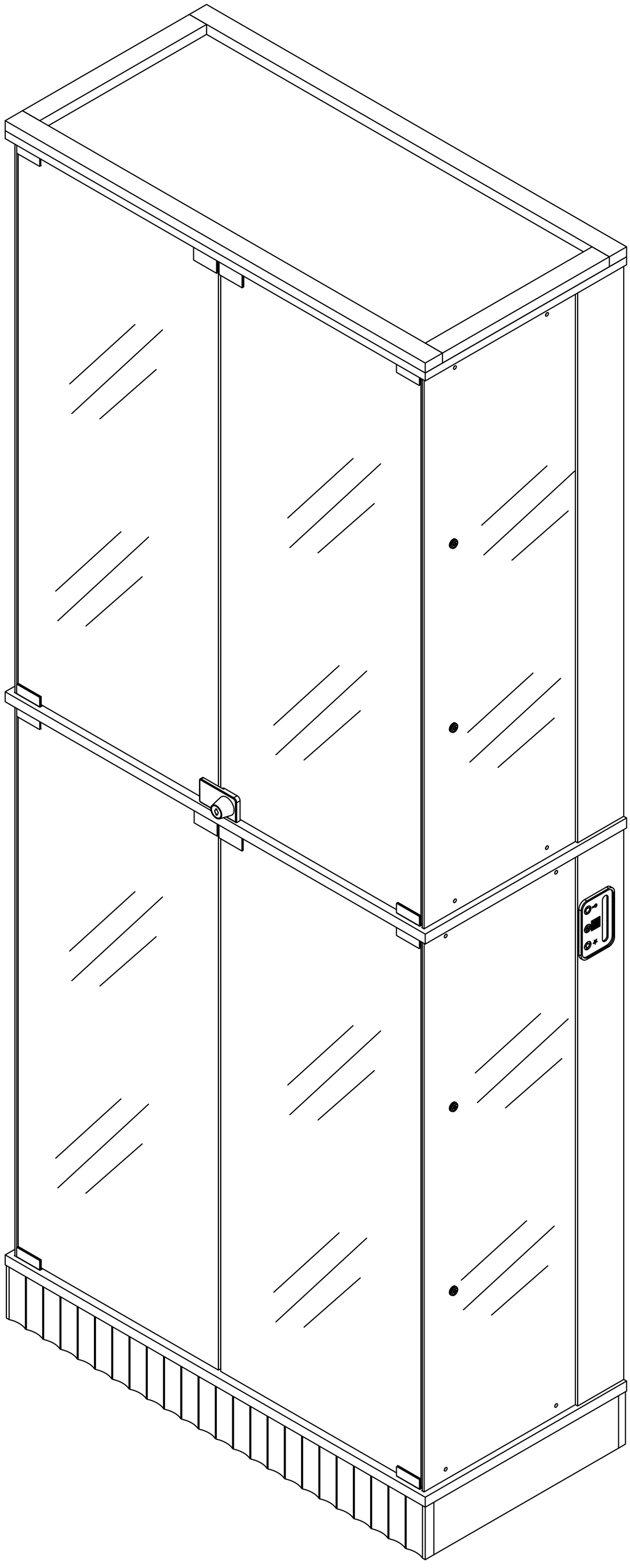

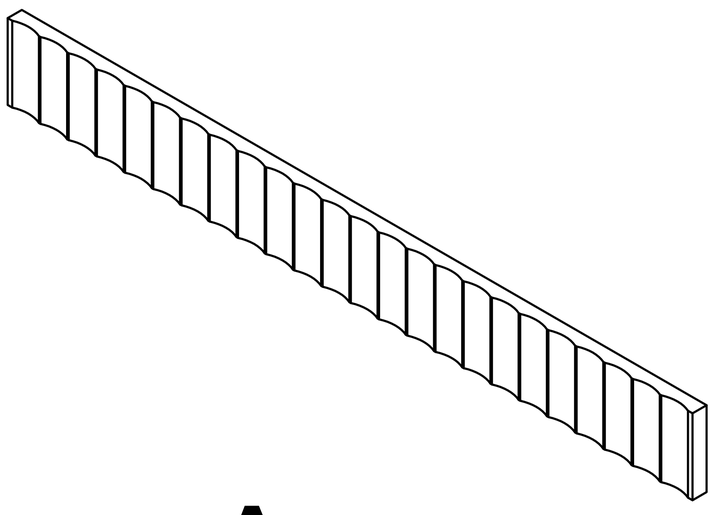

A x1

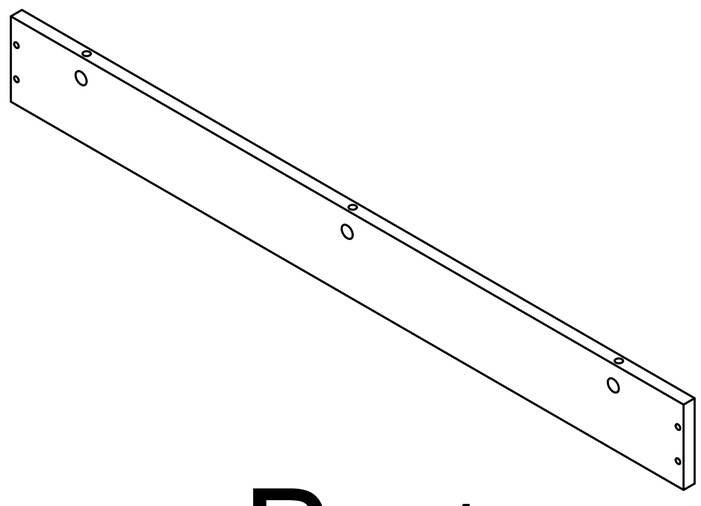

B x1

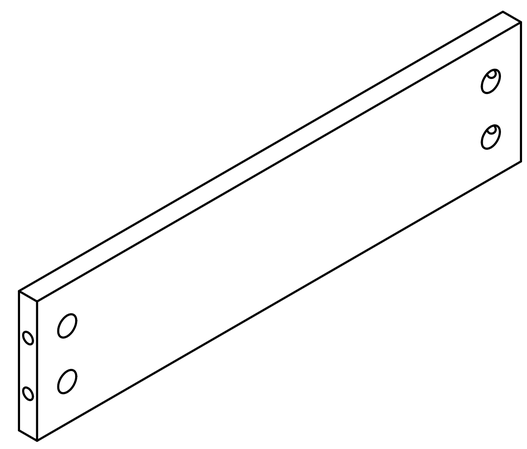

C x2

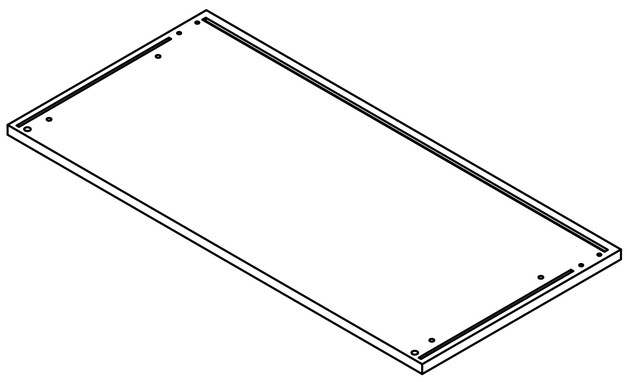

D x1

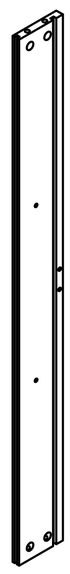

E x1

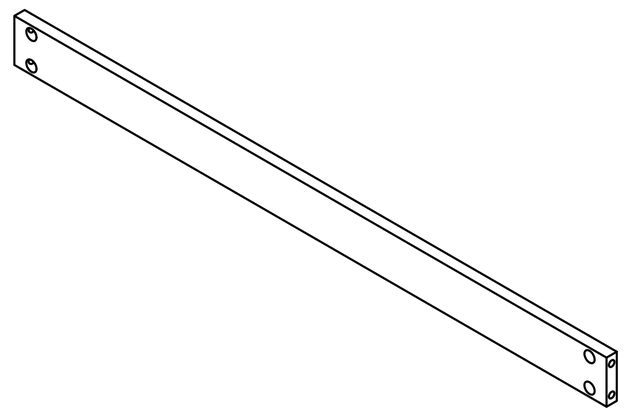

F x2

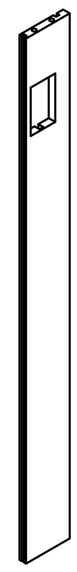

G x1

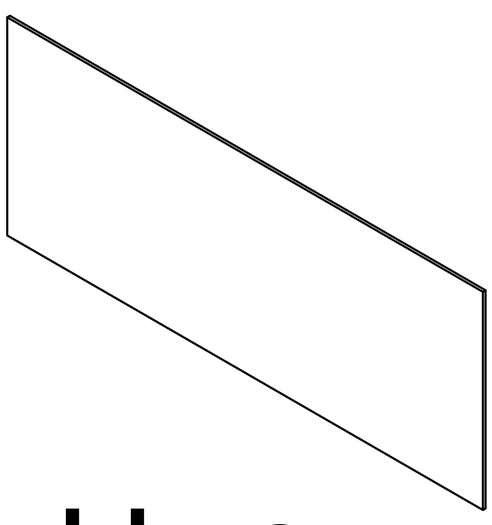

H x6

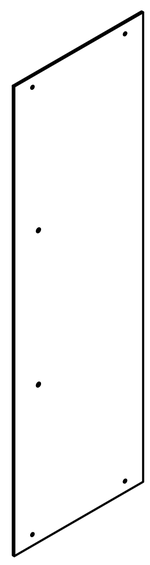

I x2

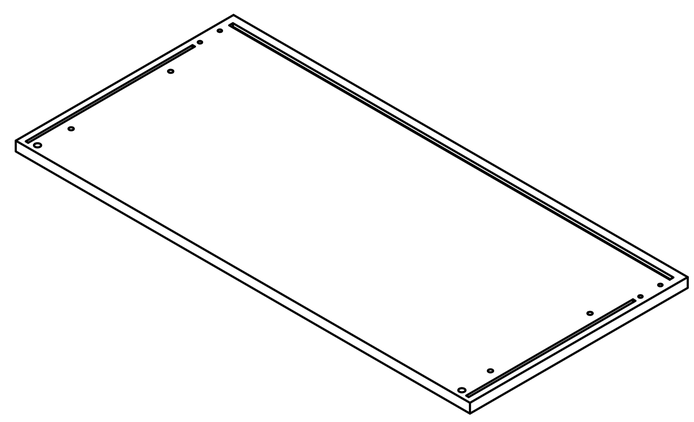

J x1

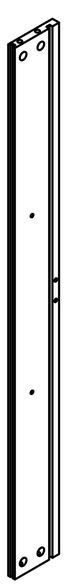

K x2

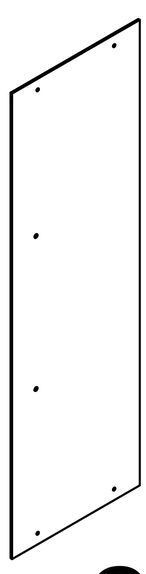

L x2

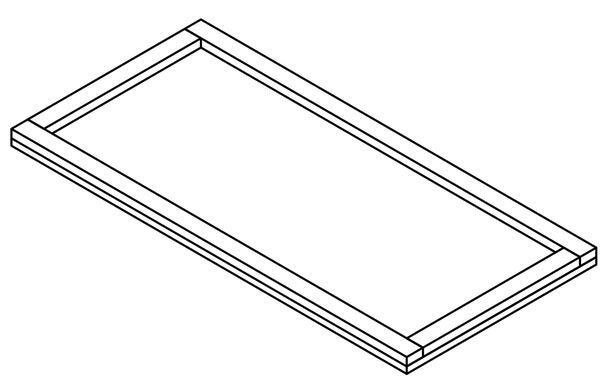

M x1

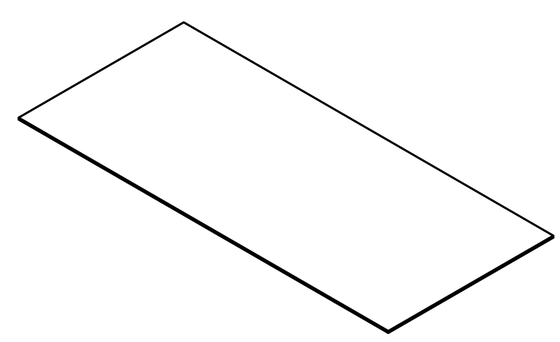

N x4

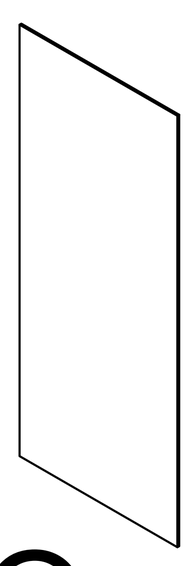

O x4

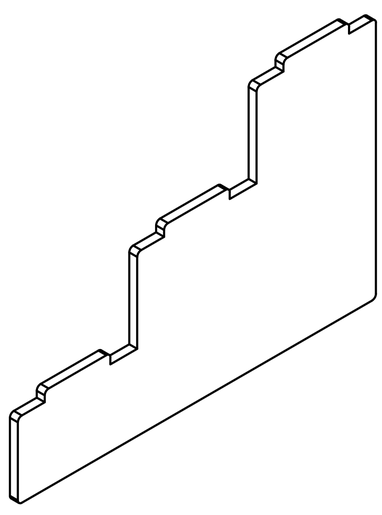

P x3

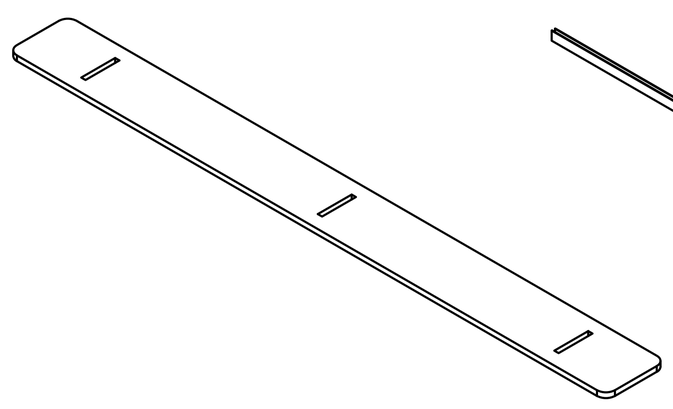

Q x3

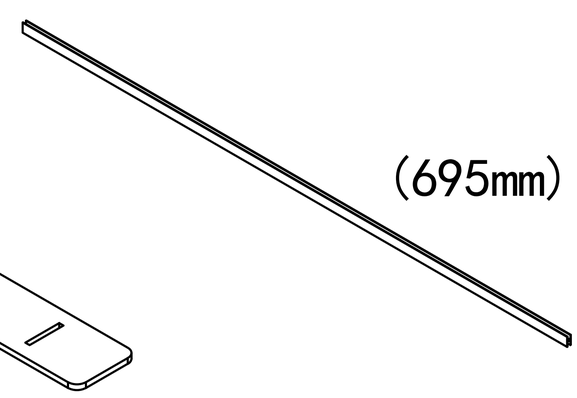

R x4

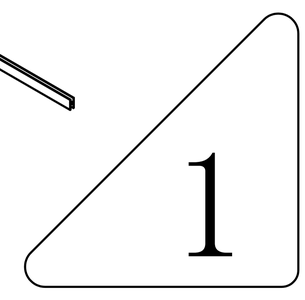

1		Two In One Screw (6x28mm)	38pcs +4pcs
2		Two In One Nut (10x12mm)	38pcs +4pcs
3		Non-slip pads (50x10mm)	6pcs +2pcs
4	x1 x2 x1	Corner Bracket,Screw (4x8mm)	16pcs +2pcs
5		Screw (4x10mm)	16pcs +2pcs
6		Laminate Support Nail	8pcs +1pcs
7	x1 x2 x1	Laminate Support Nail(12x6x2mm) & Screw(6x18mm)	8pcs +1pcs
8		Rebound device & Screw (3x16mm)	8pcs +2pcs / 2pcs
		Iron sheet	4pcs
		Hinge	8pcs / 4pcs / 4pcs
9		Double door glass lock & Key	2pcs / 1pcs
10		Fixing clip & screw (3x16mm)	24pcs +3pcs
11	x2 x4 x2 (3.5x14mm) x2 x2 (4x45mm)	Anti Fall Hardware	1pcs

AC/DC Adapter (12V ⎓ 3.0A)

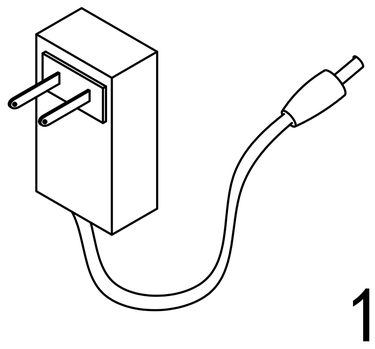

1pcs

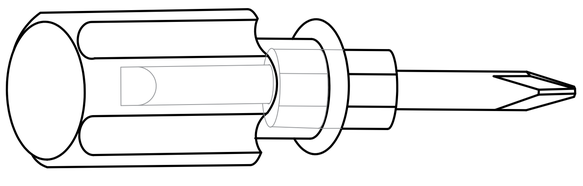

1pcs

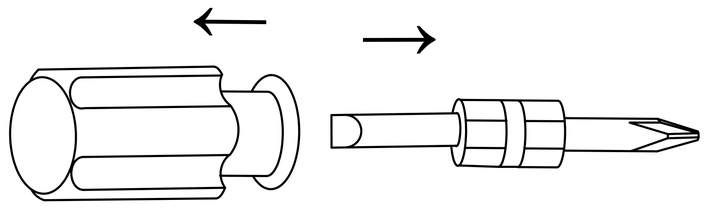

Double-head screwdriver, use as required

Product structure decomposition

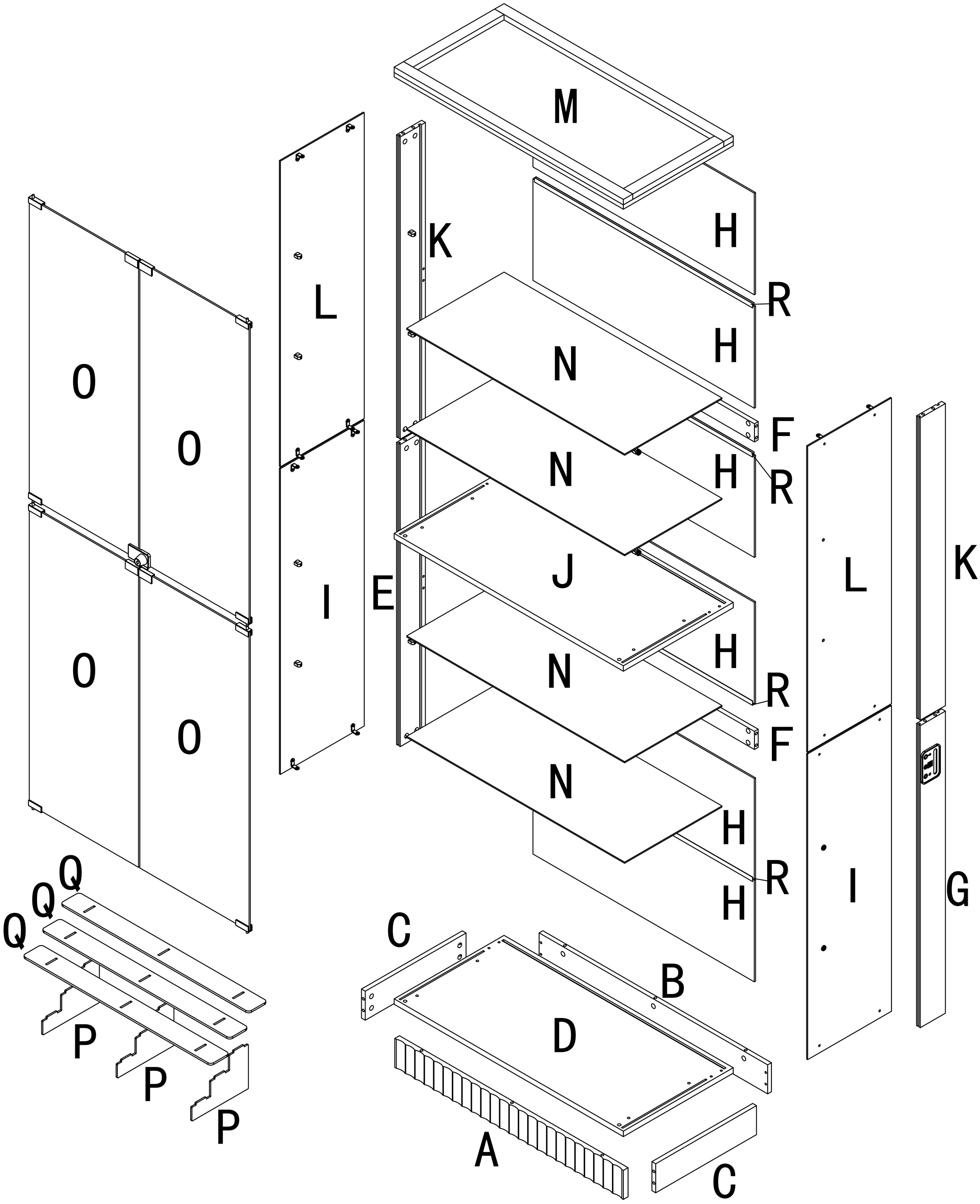

Use parts ① and ②

Step1

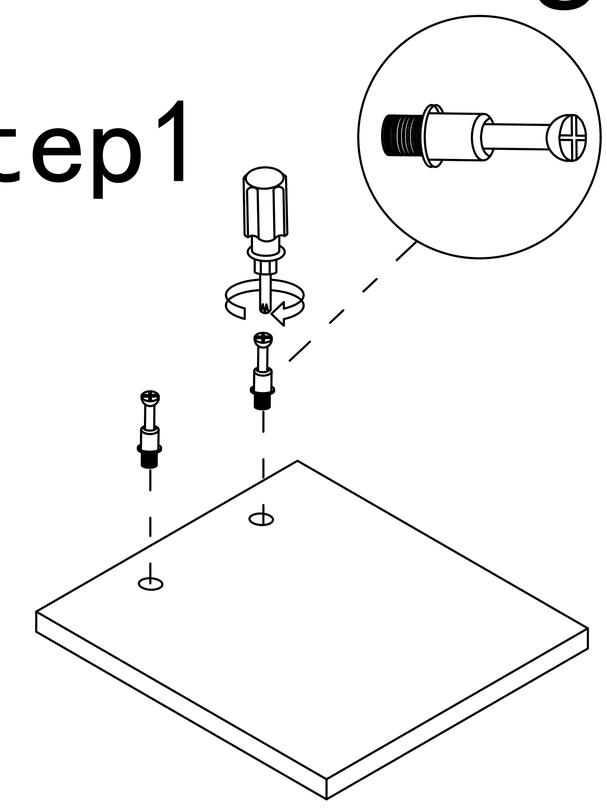

Step2

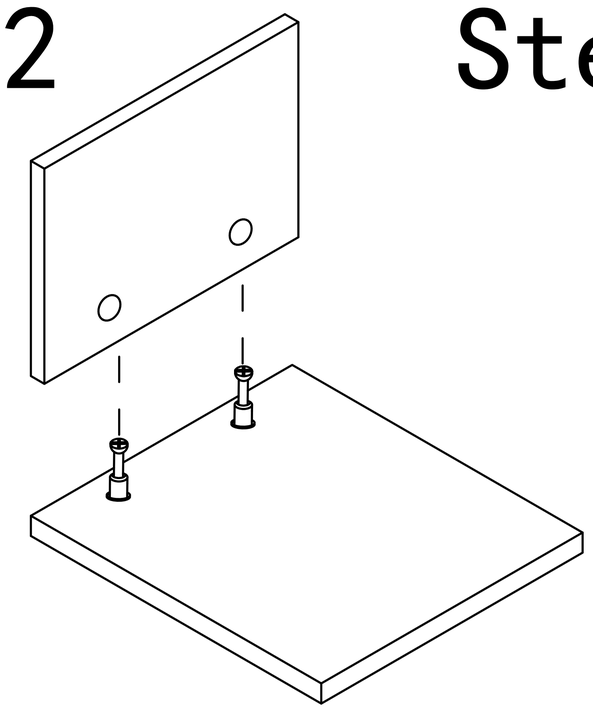

Step3

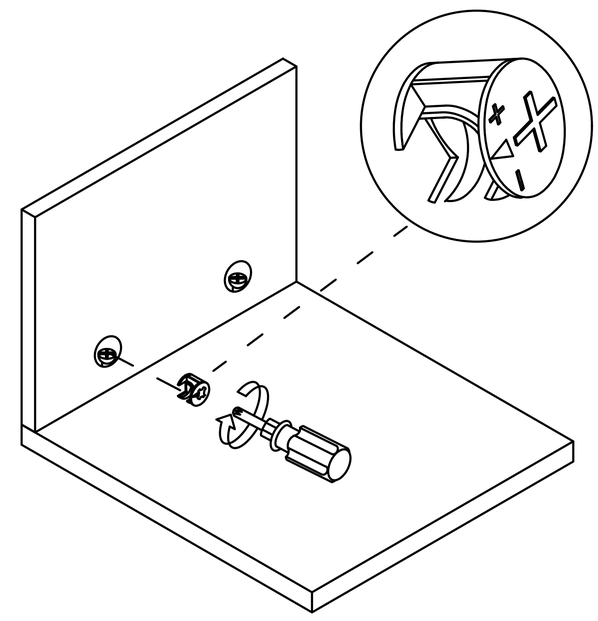

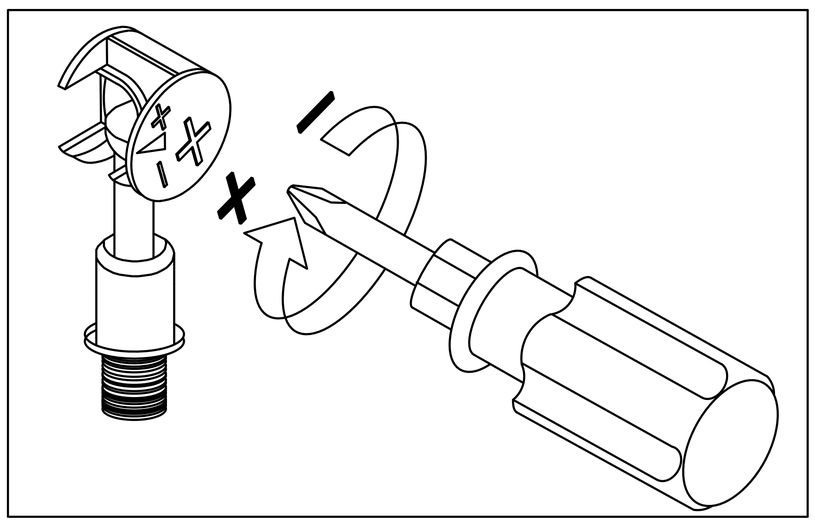

Use a screwdriver to lock in the direction of the "+" sign

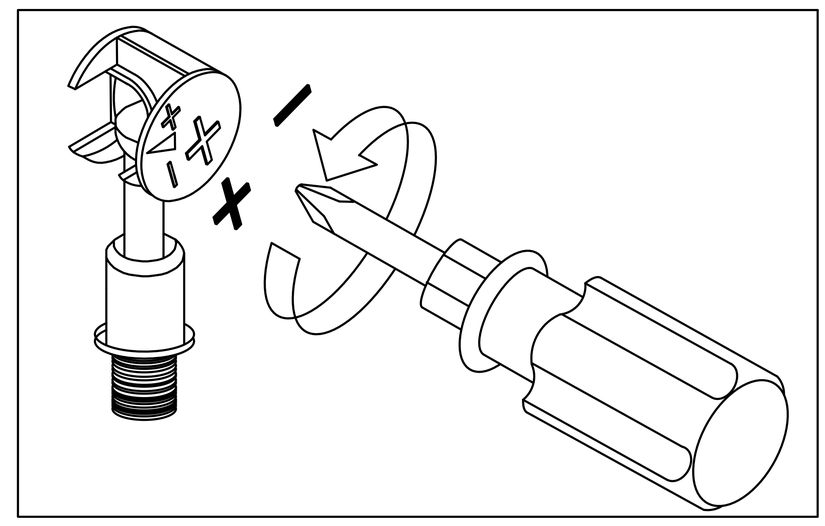

Disassemble along the direction of "-" sign

Step 1

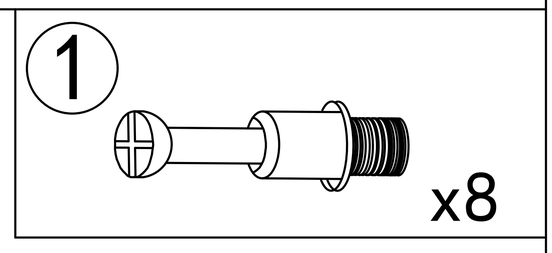

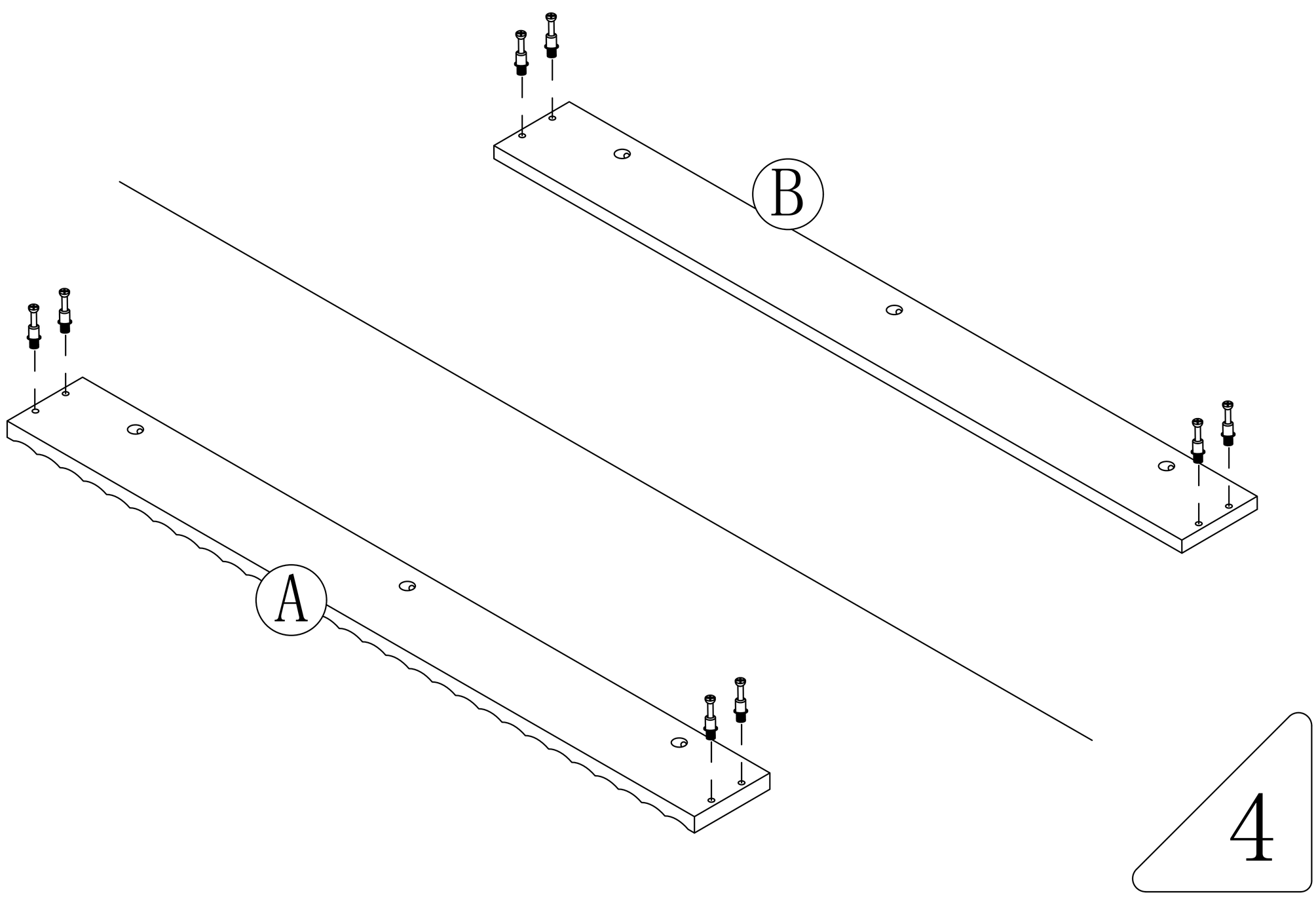

Step 2

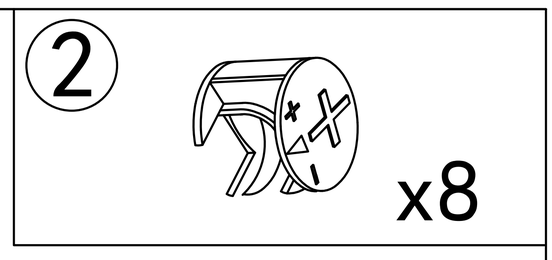

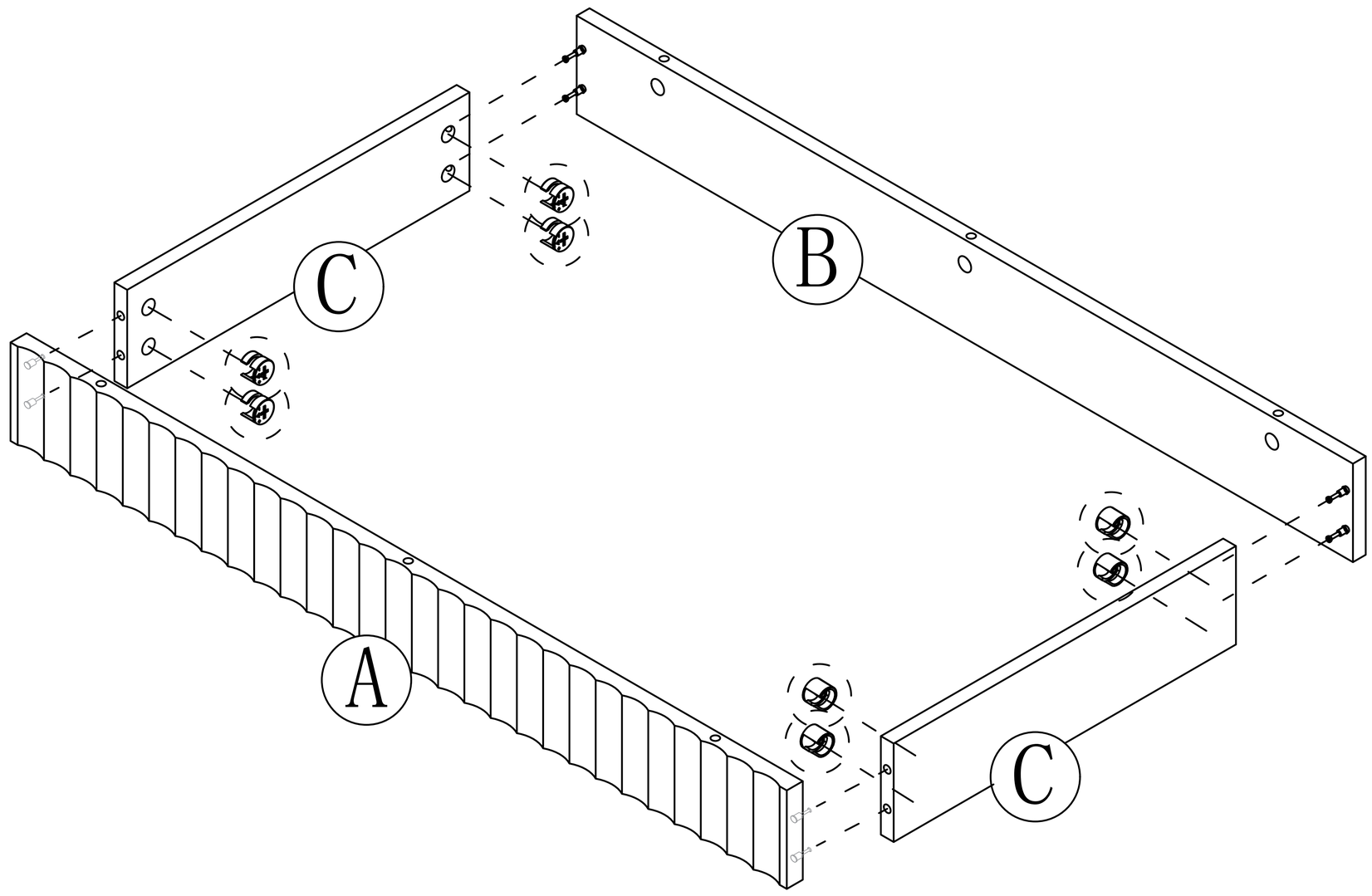

Step 3

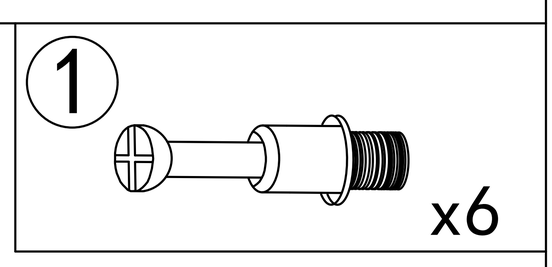

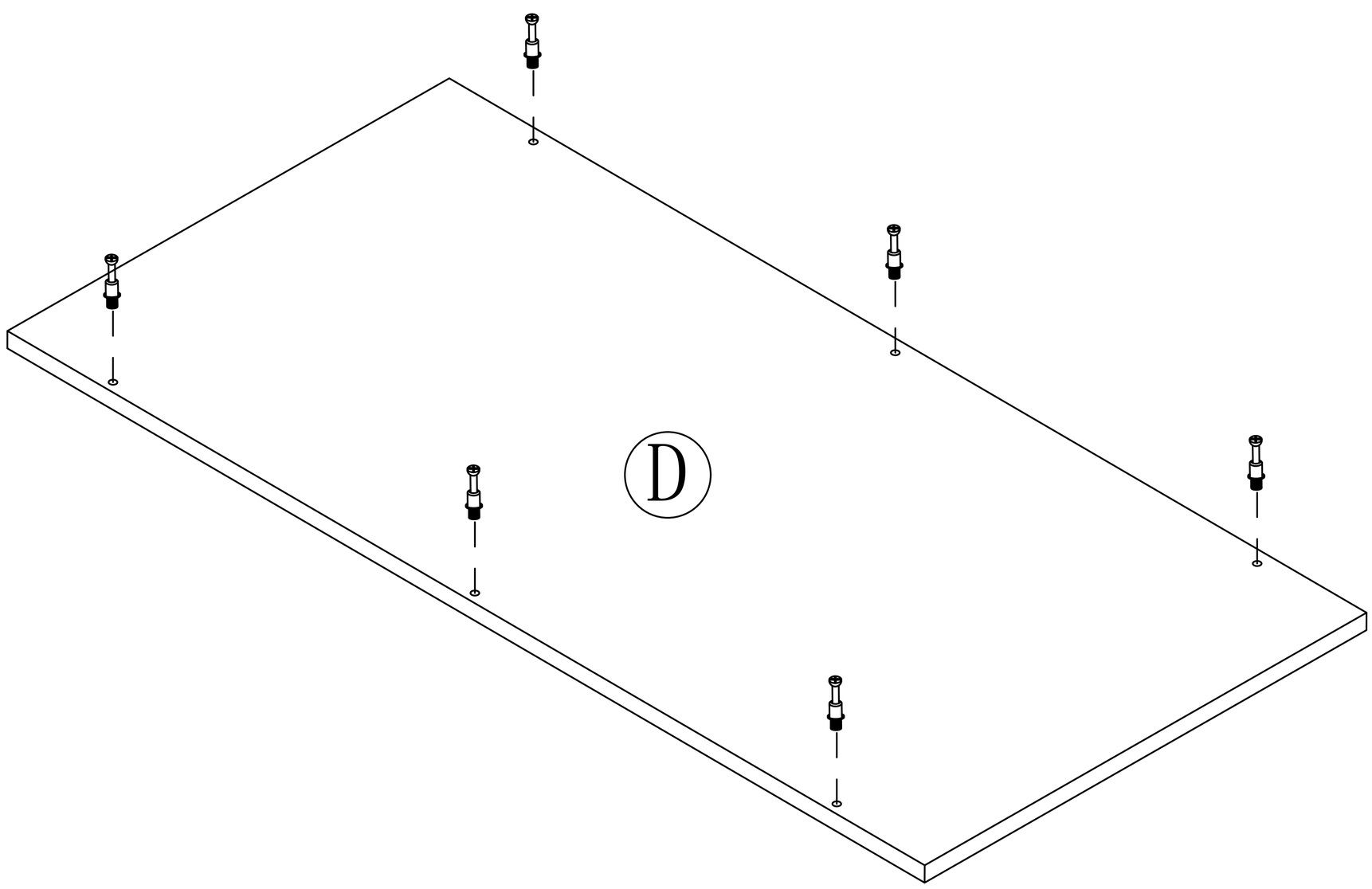

Step 4

② x6

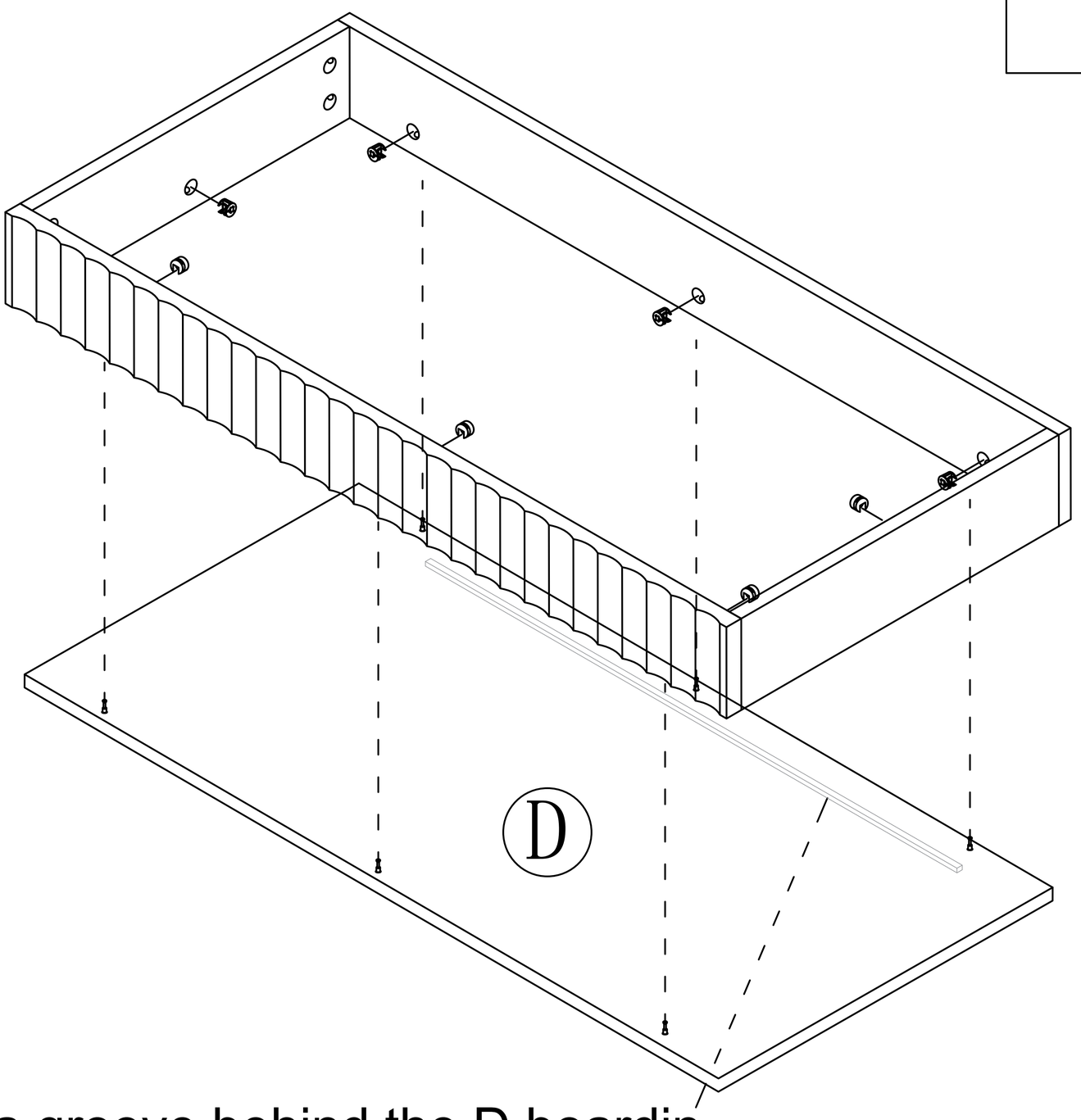

Attention: There is a groove behind the D boardin
the position where the D board is installed

Step 5

③ 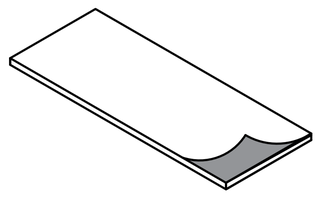 x6

Tear off release paper and stick the black foot pad on the board

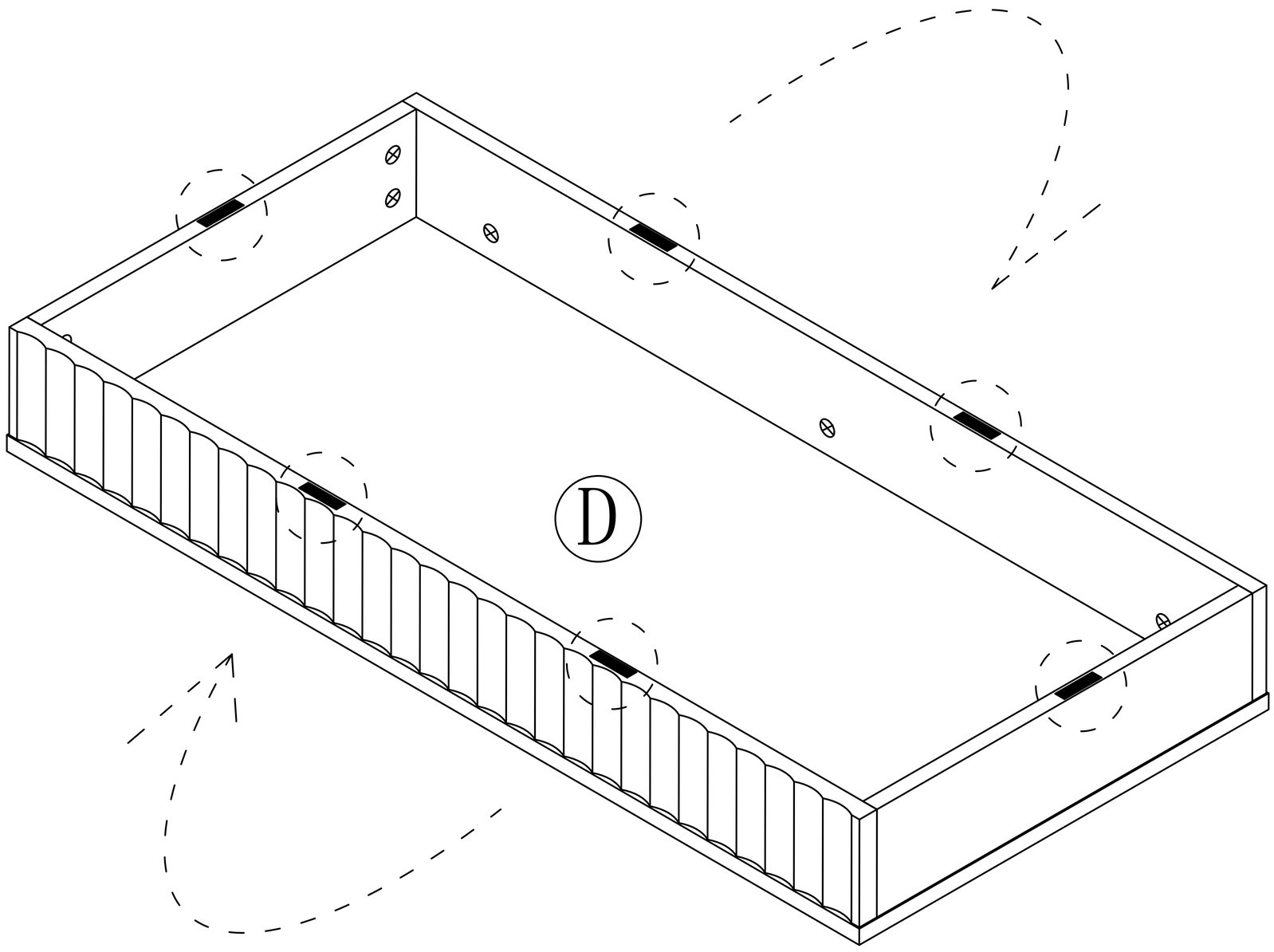

Step 6

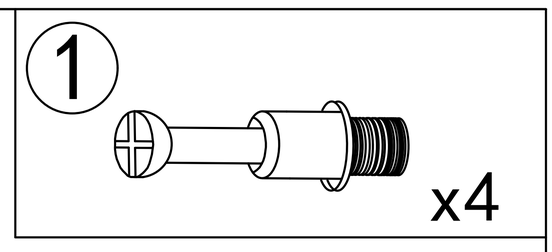

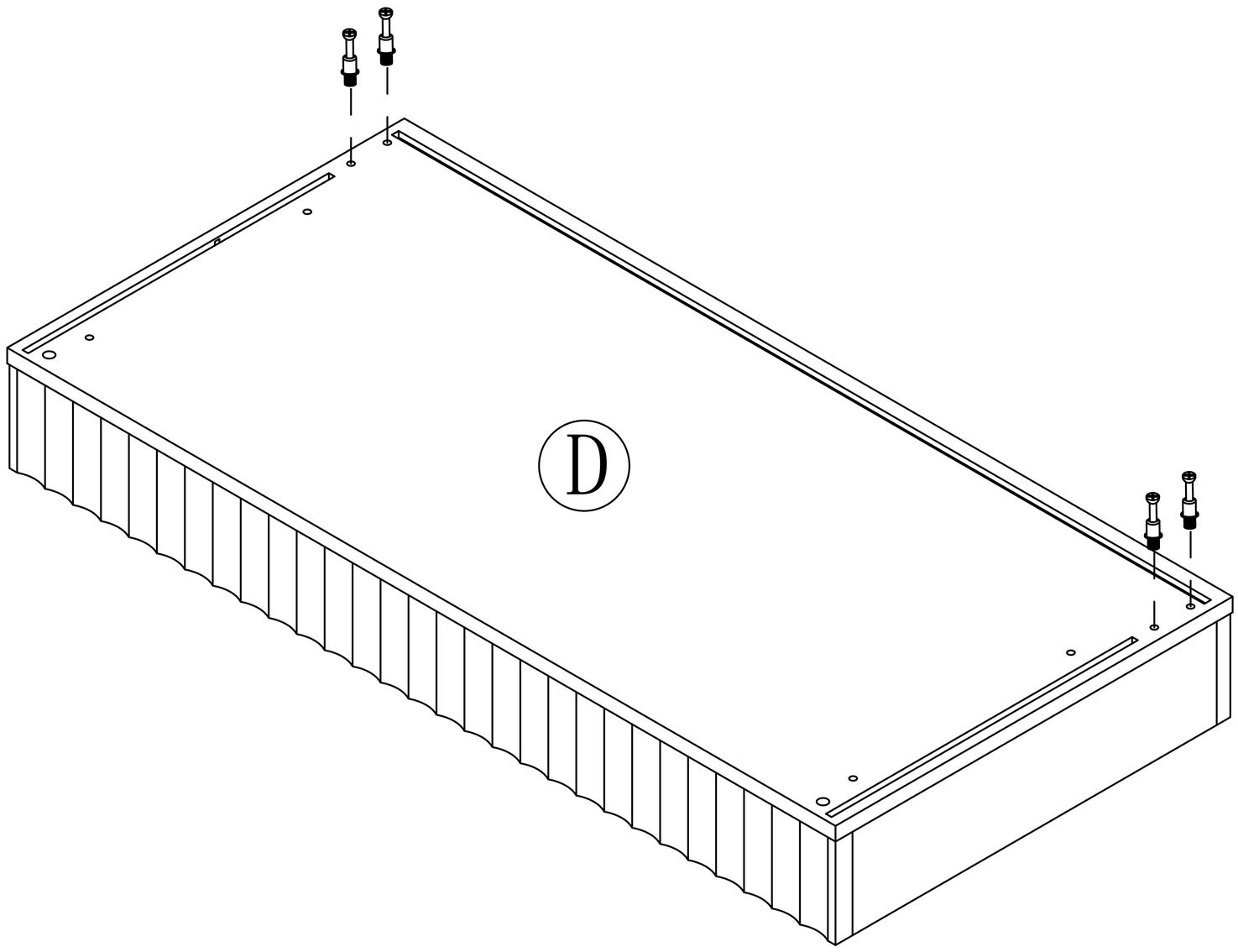

Step 7

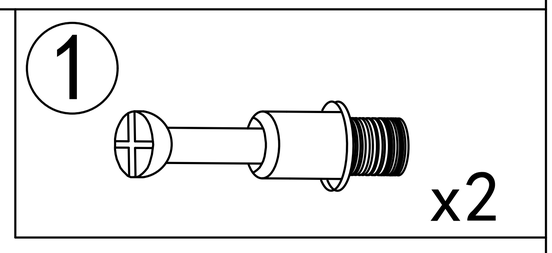

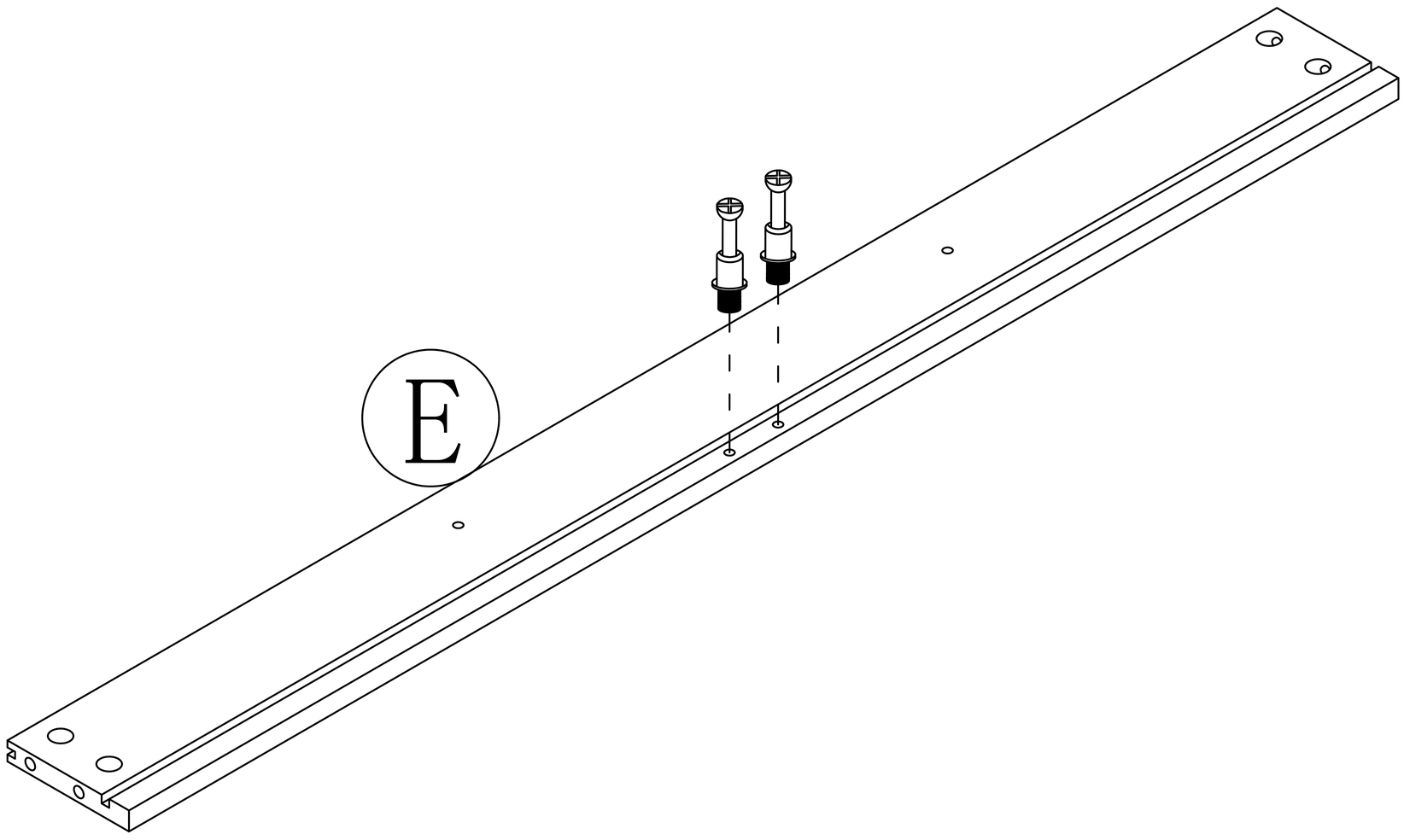

Step 8

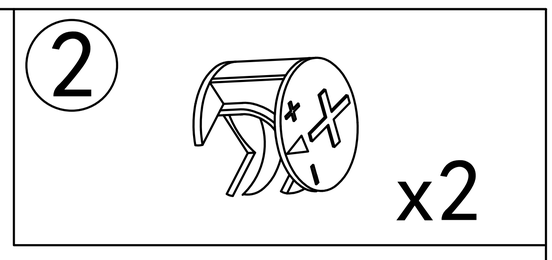

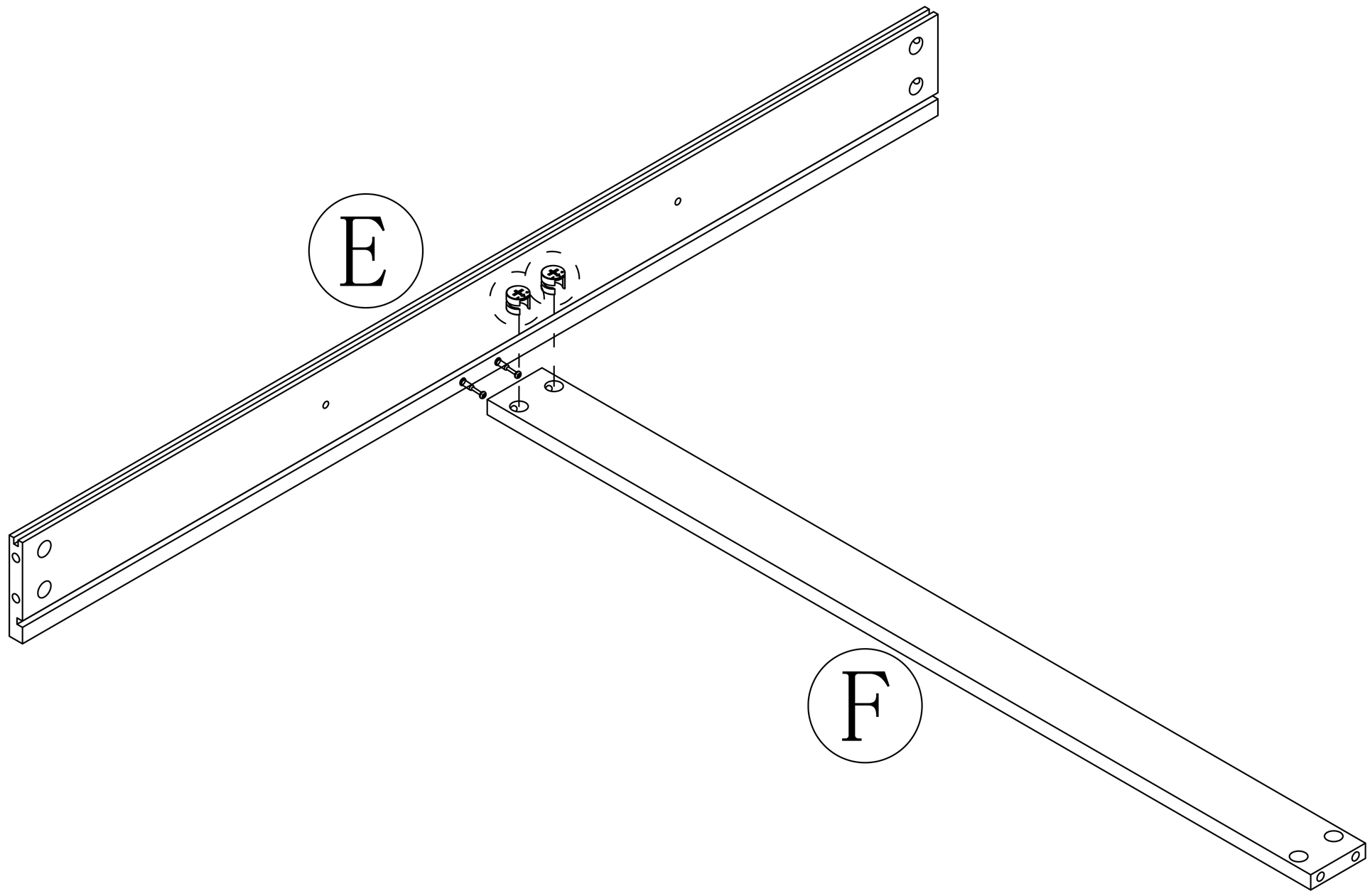

Step 9

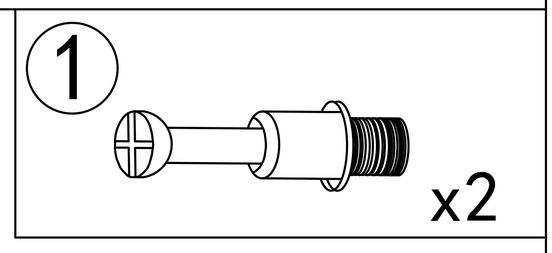

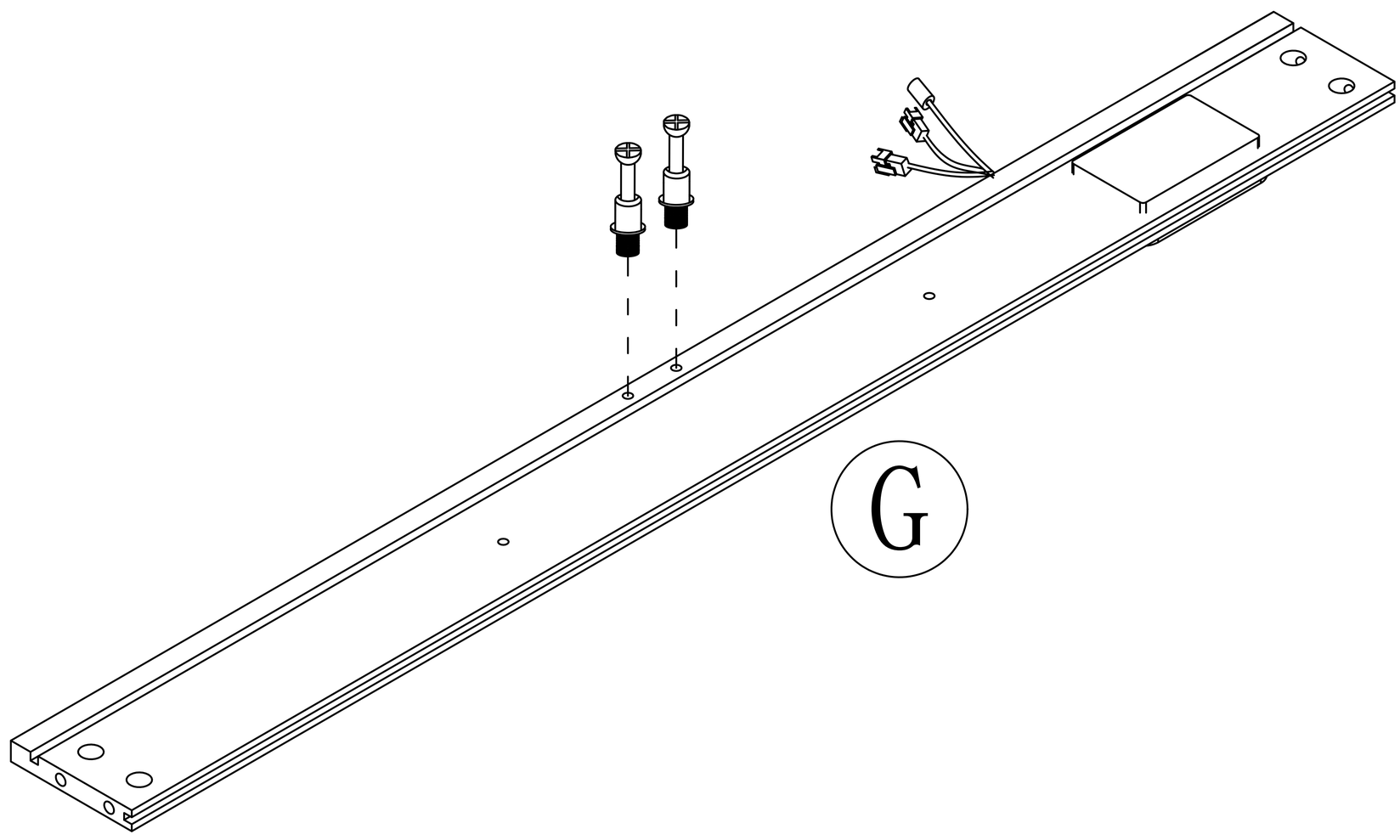

Step 10

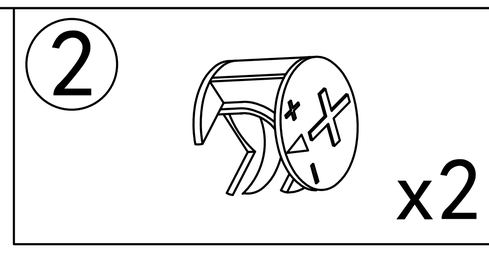

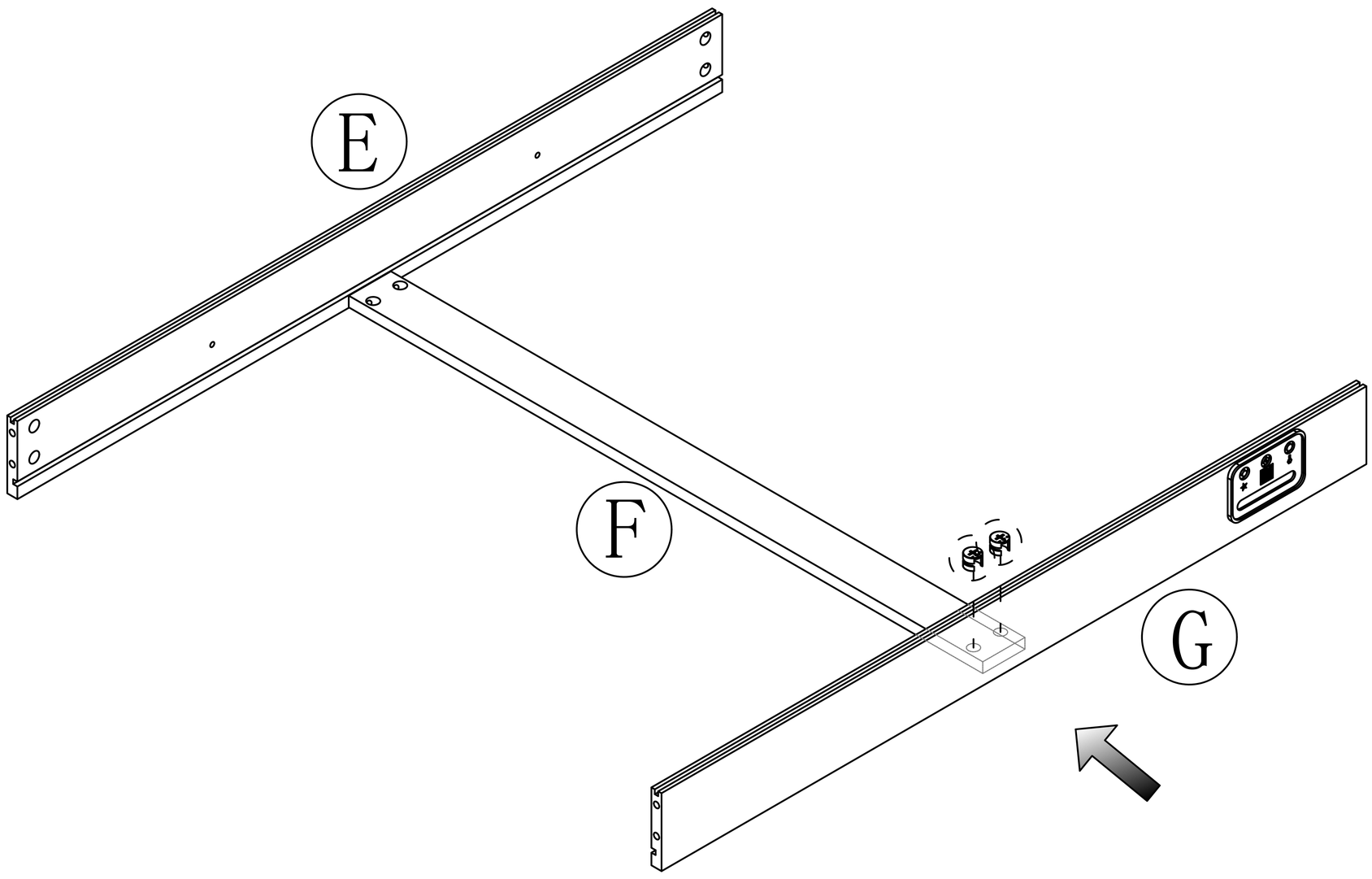

Step 11

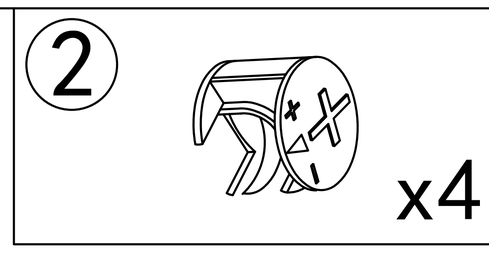

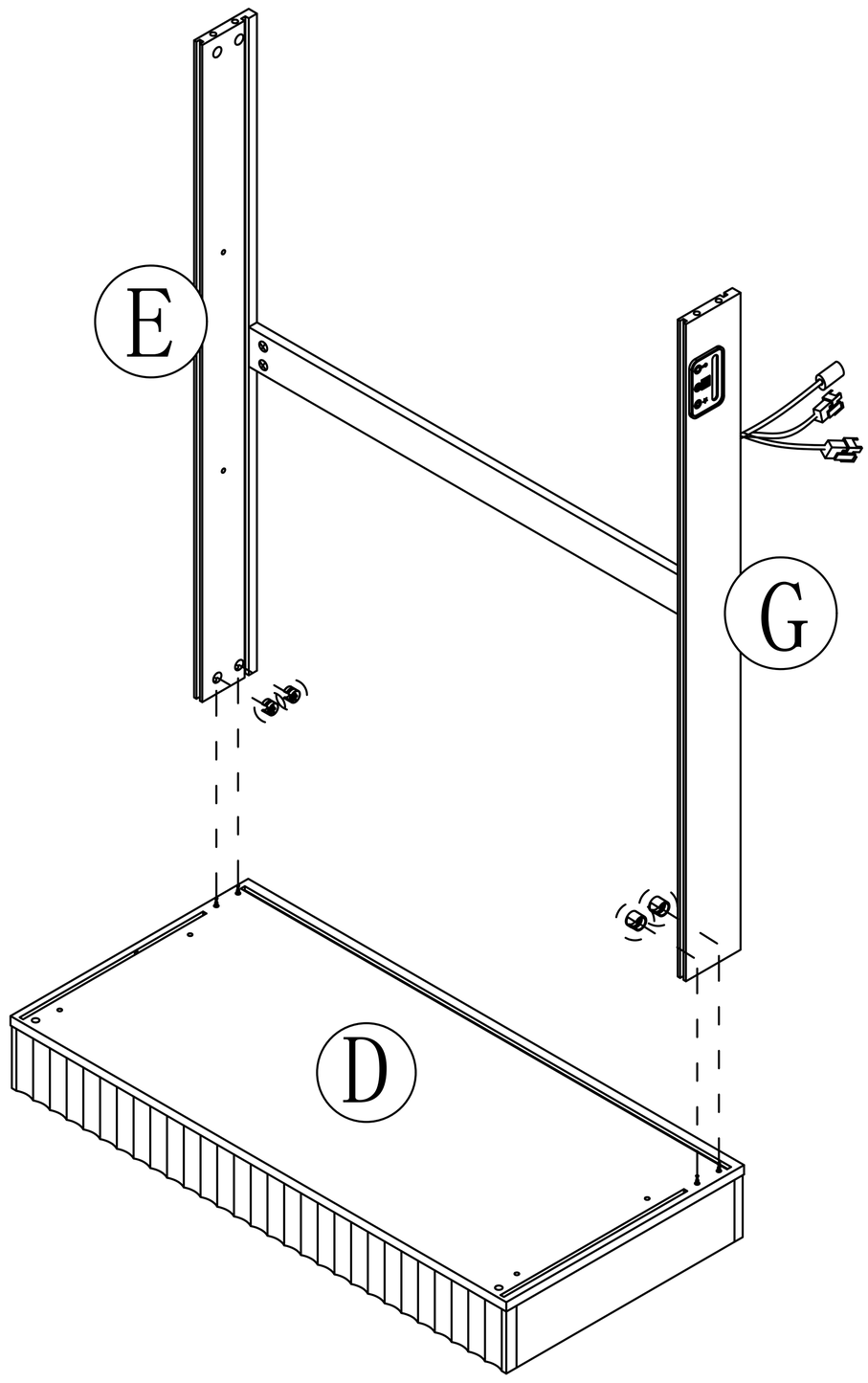

Step 12

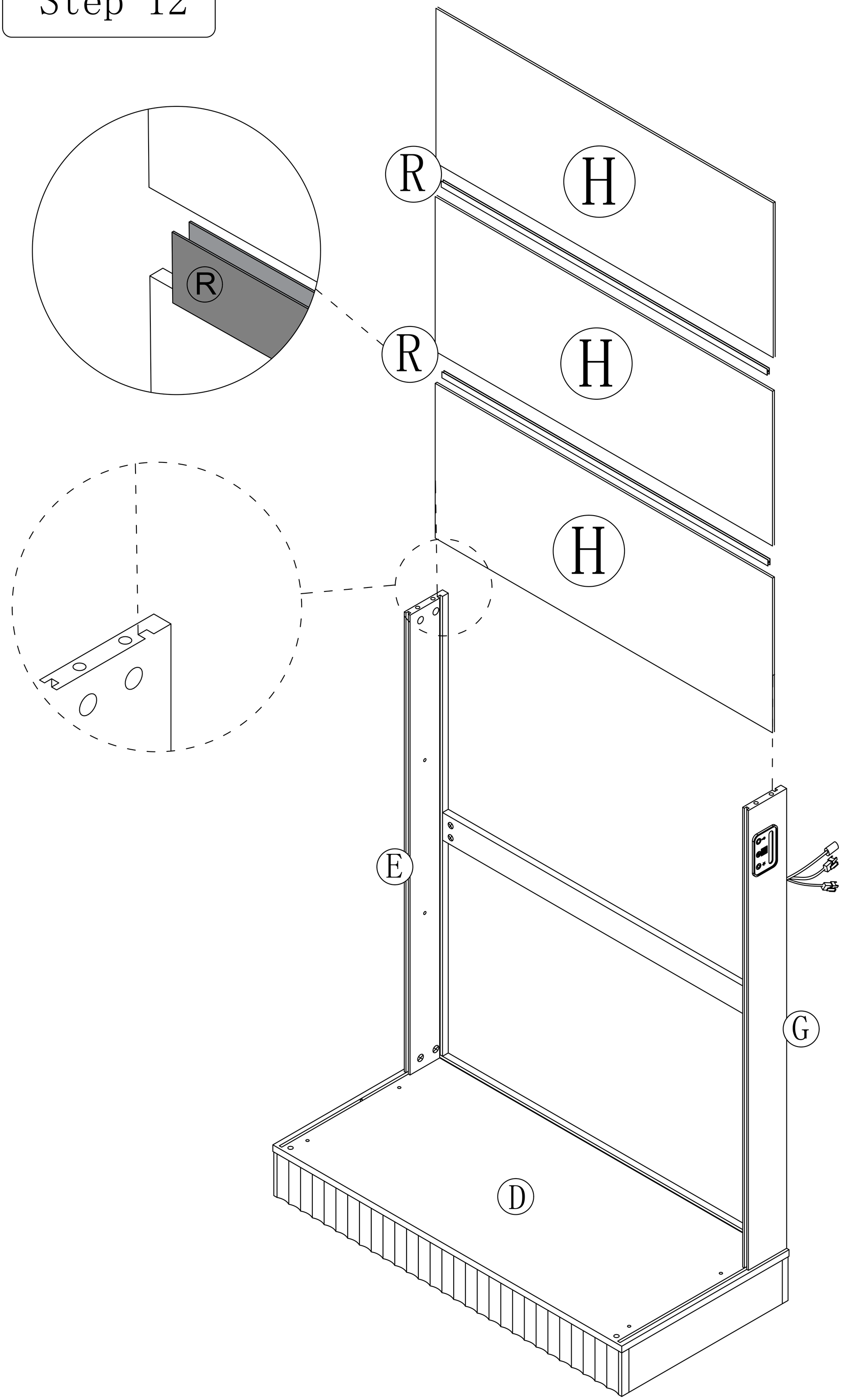

Step 13

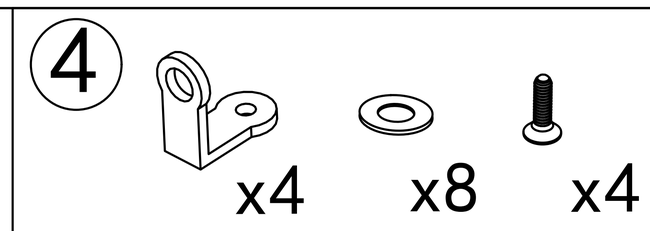

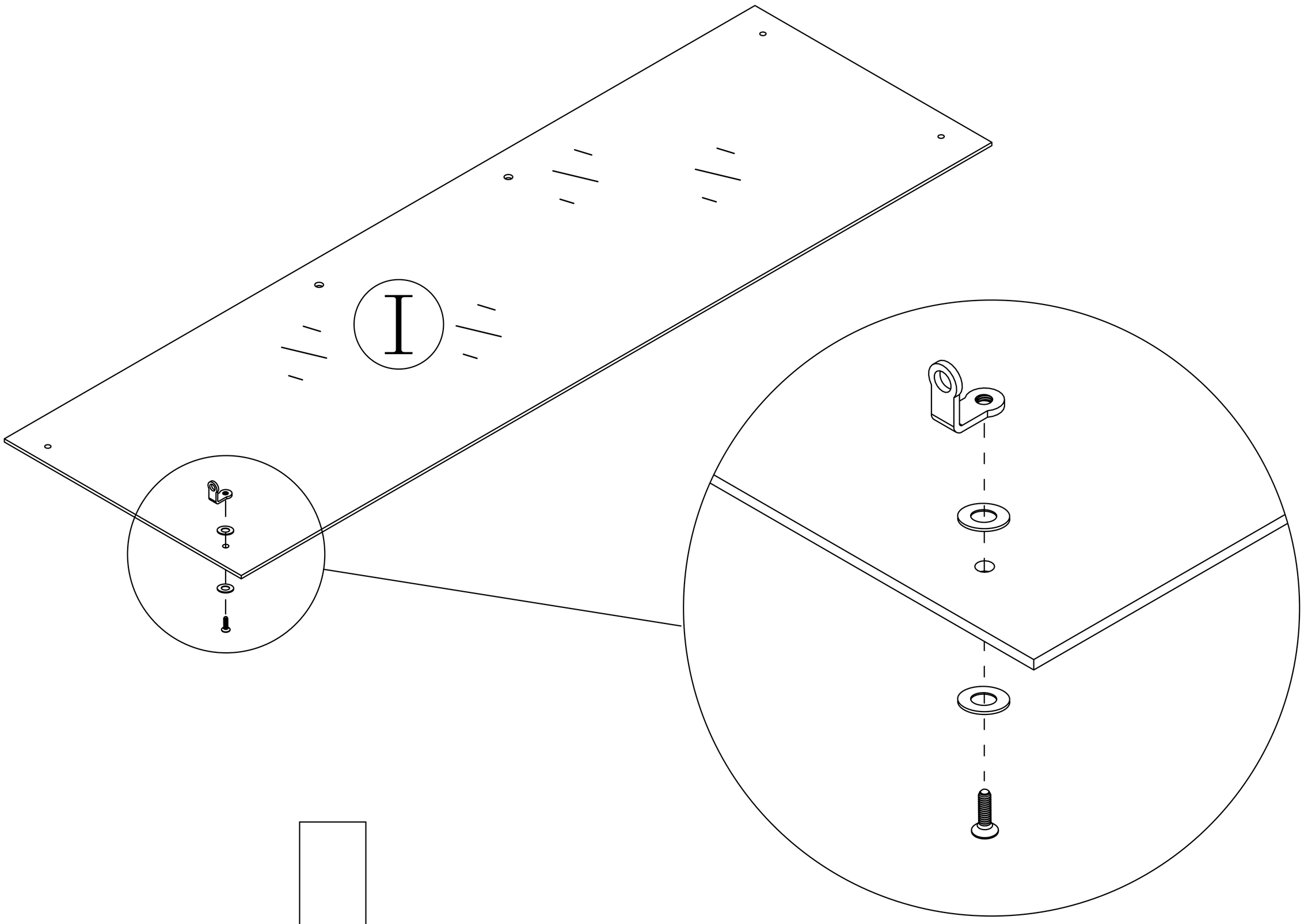

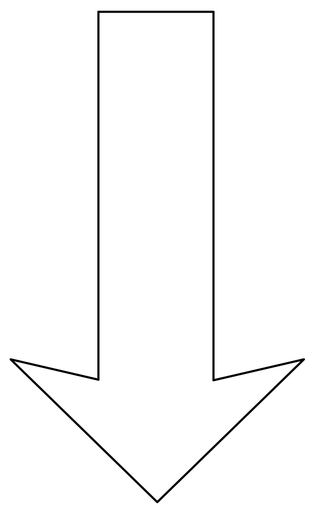

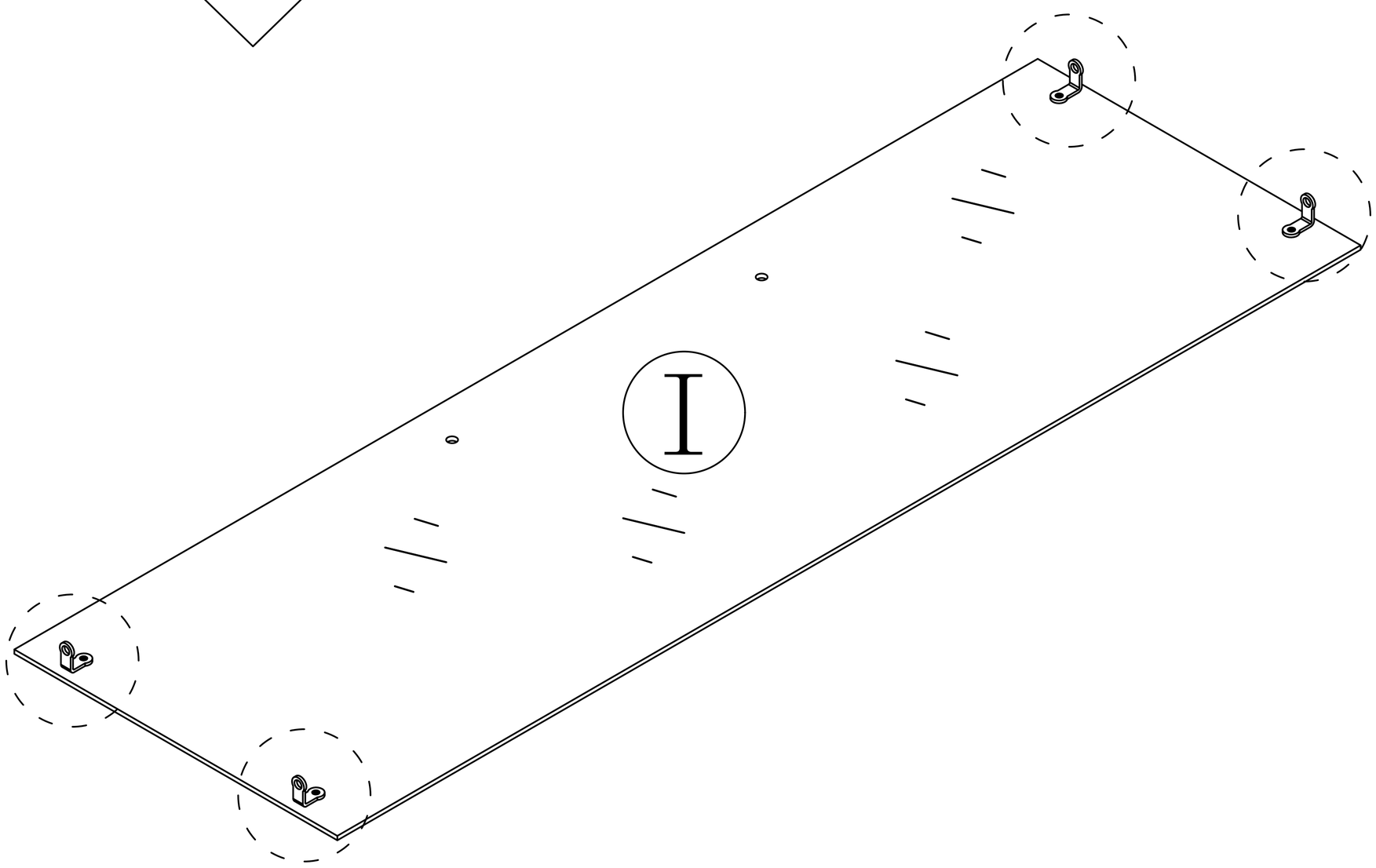

Step 14

⑤ x2

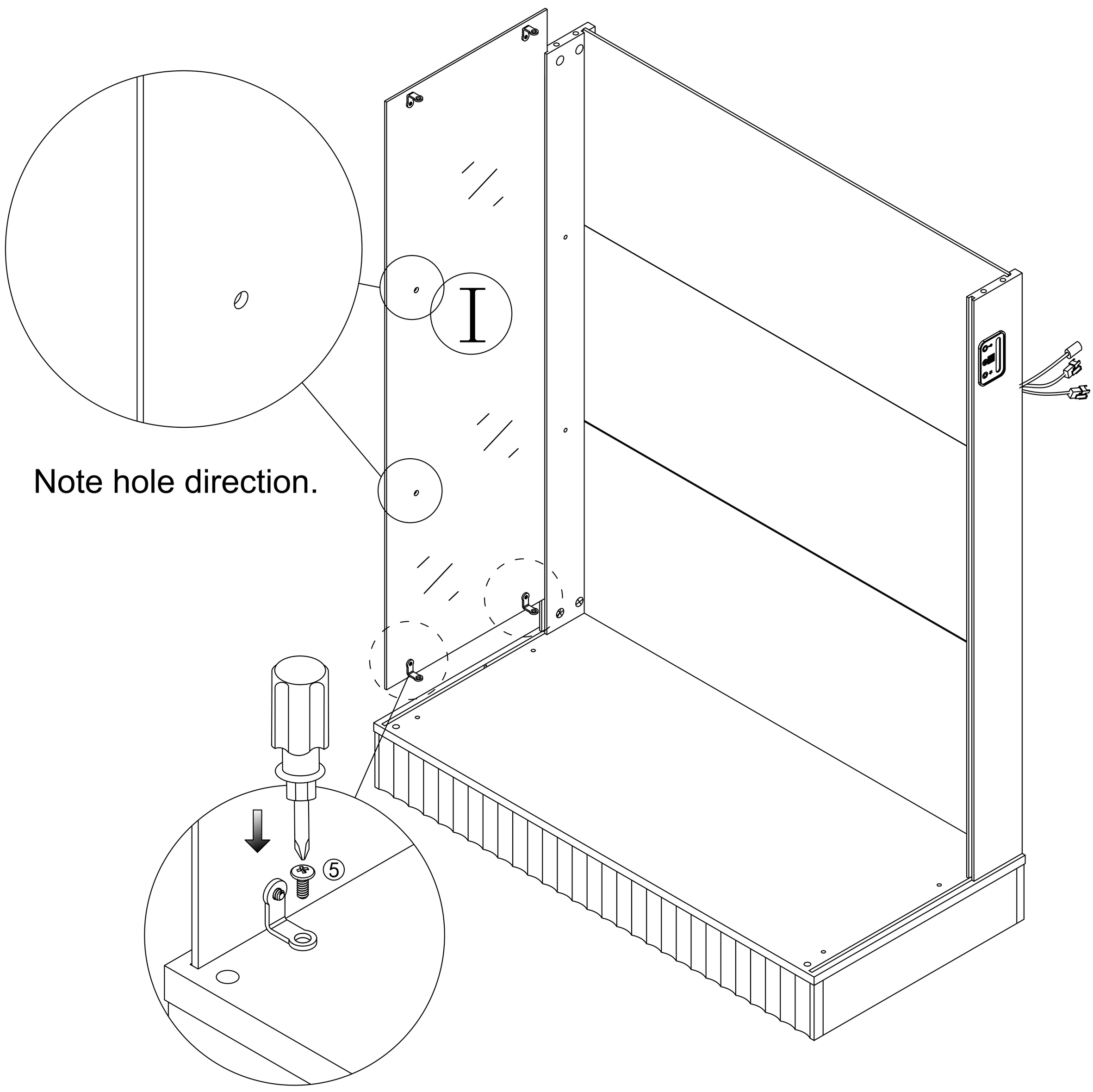

Step 15

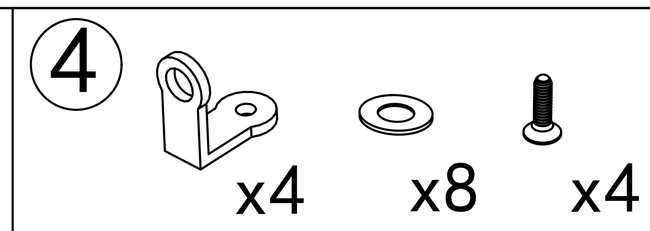

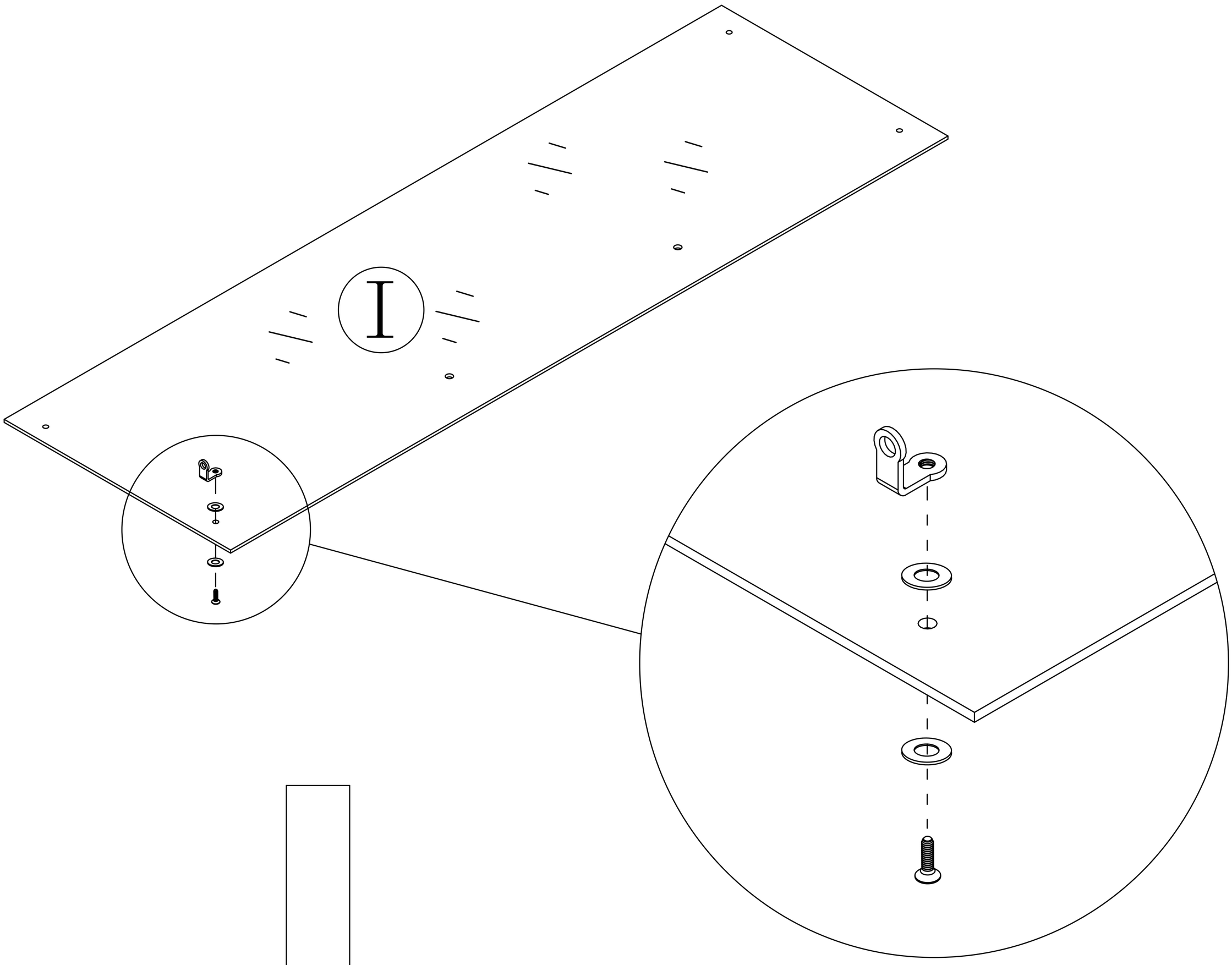

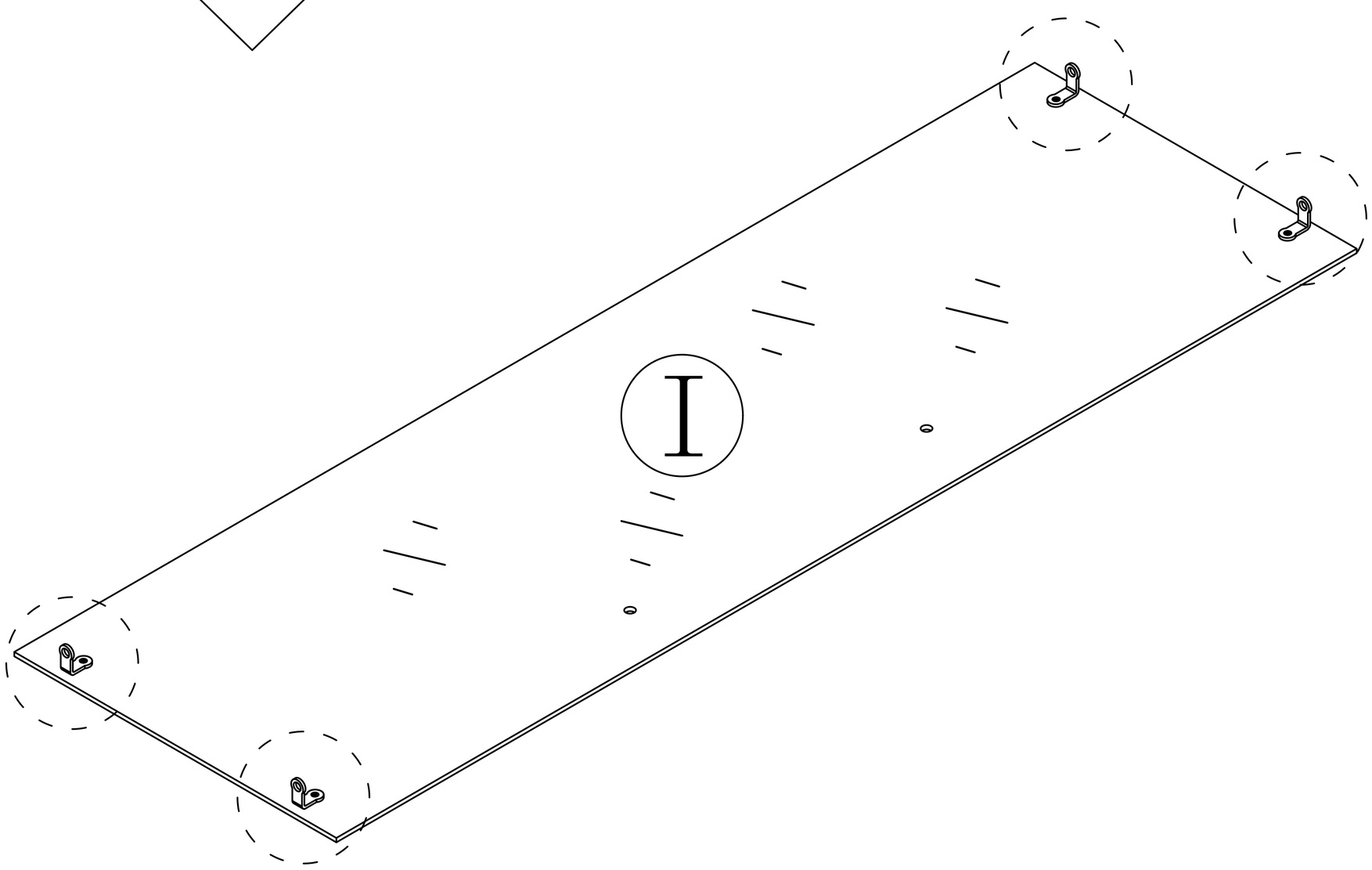

Step 16

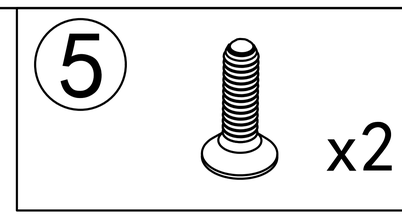

Note hole direction.

Step 17

6 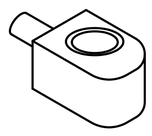 x4

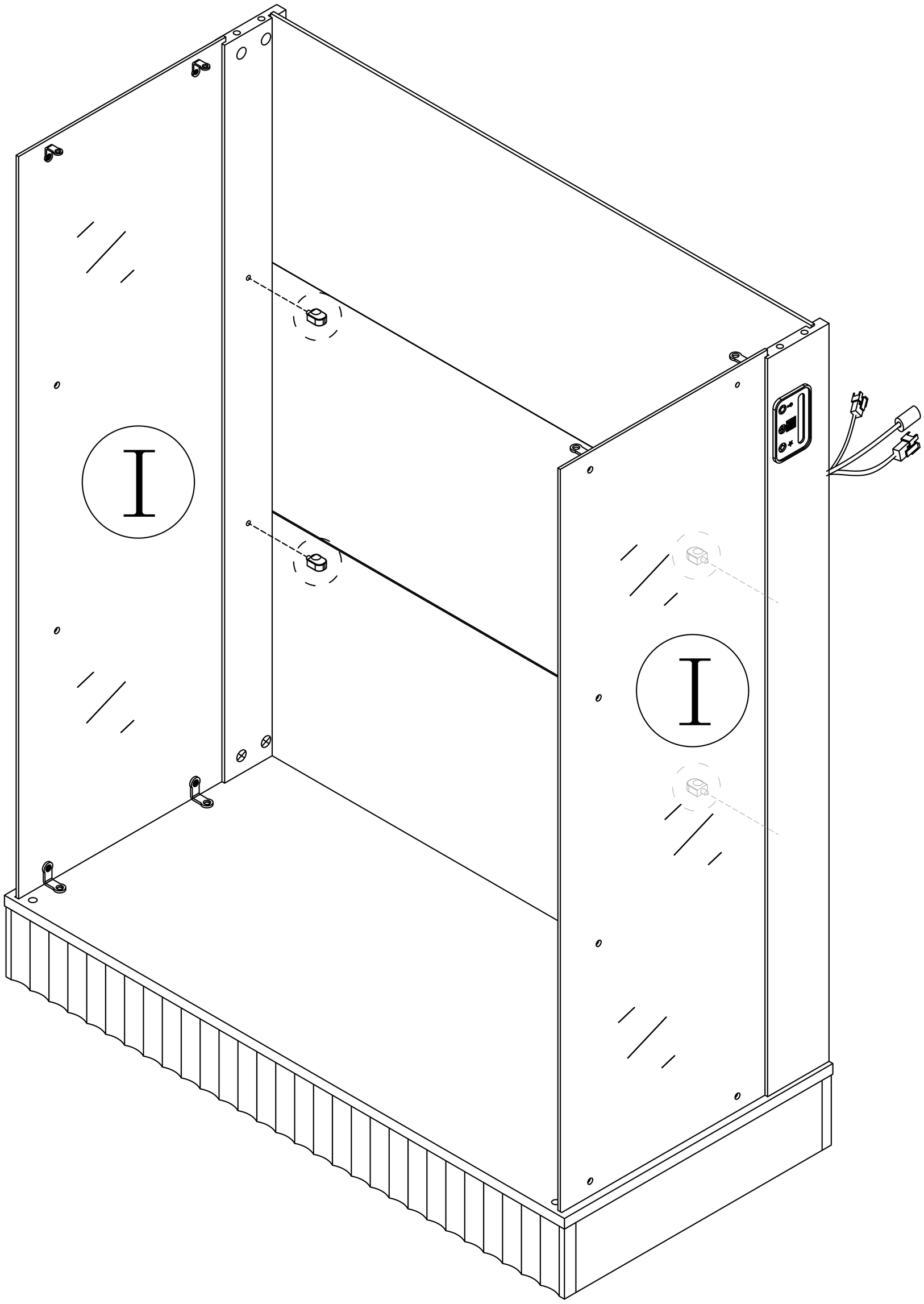

Step 18

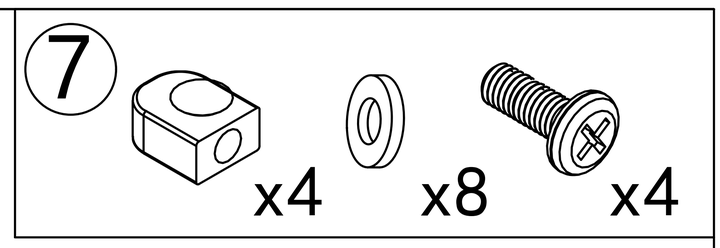

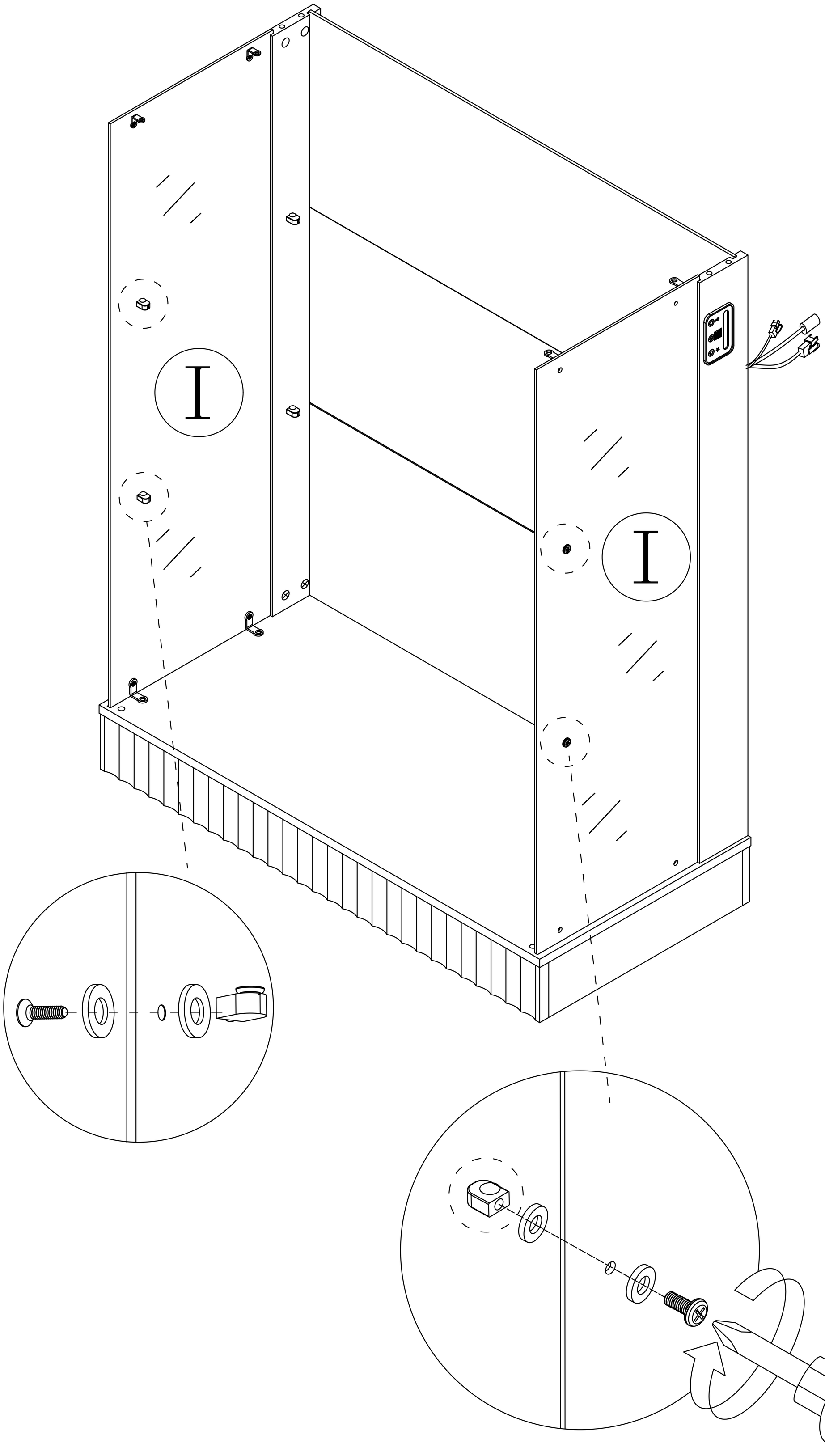

Step 19

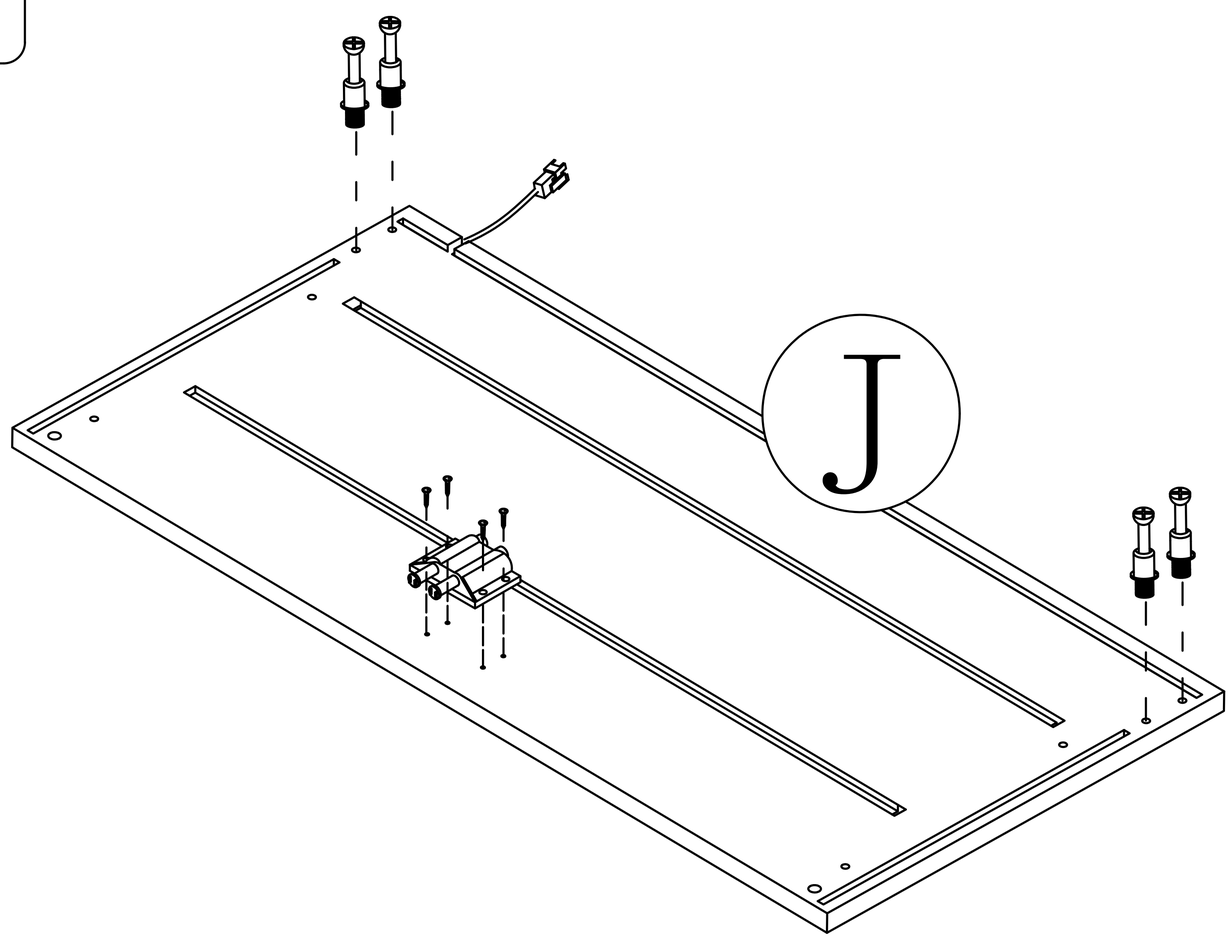

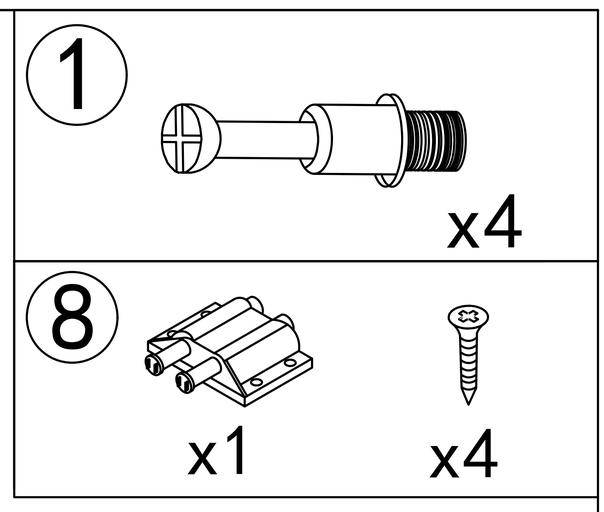

Step 20

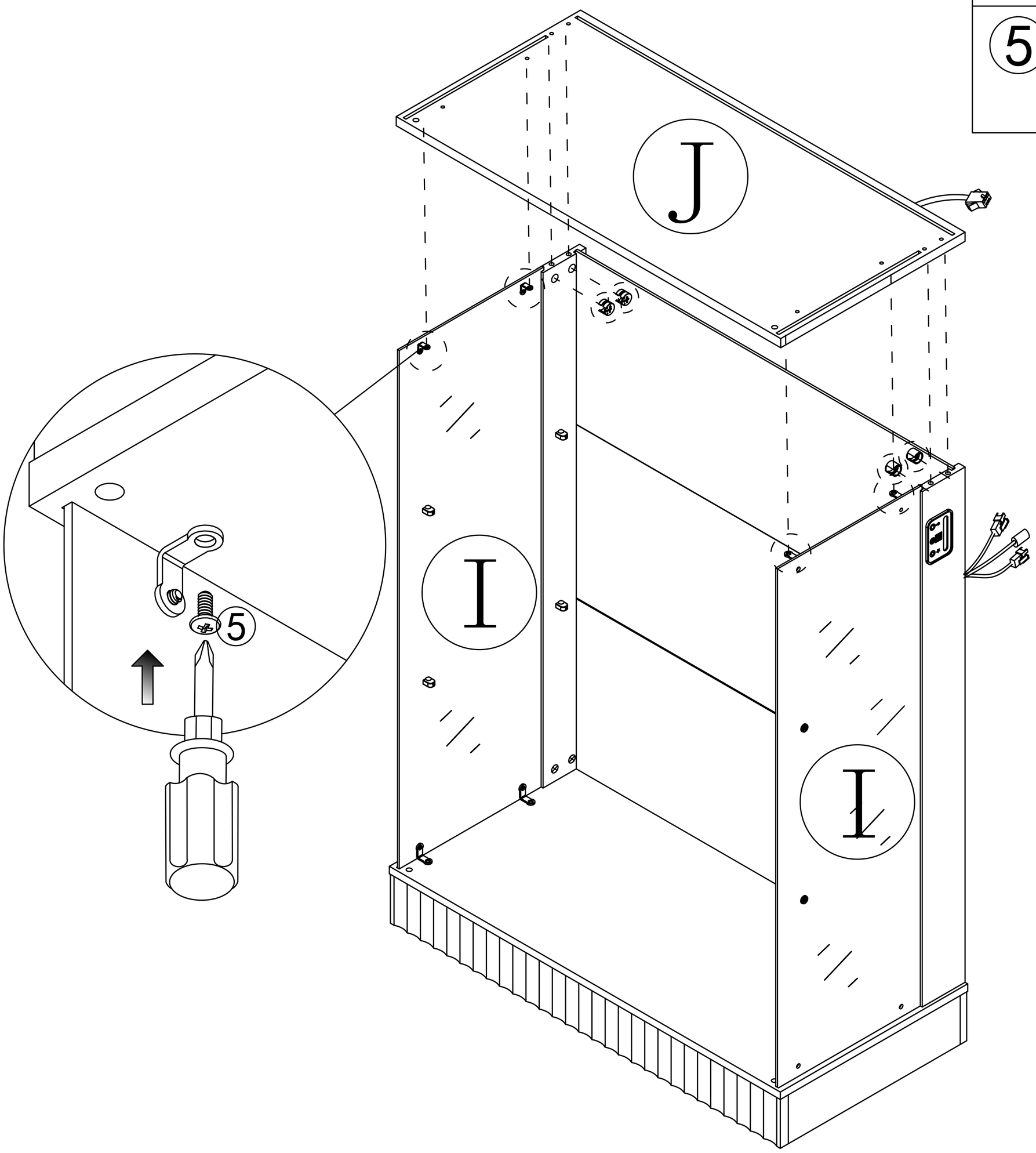

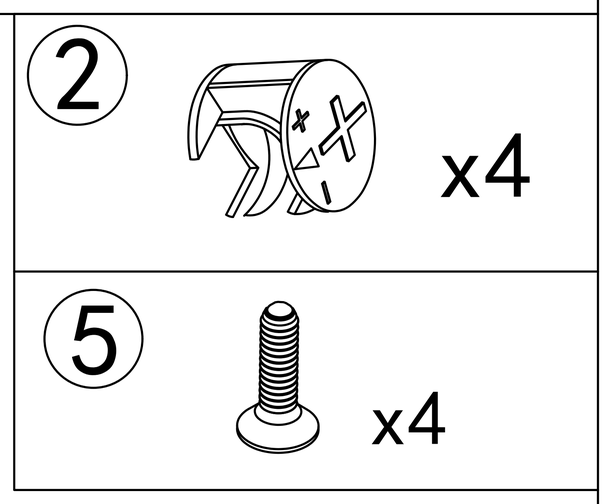

Step 21

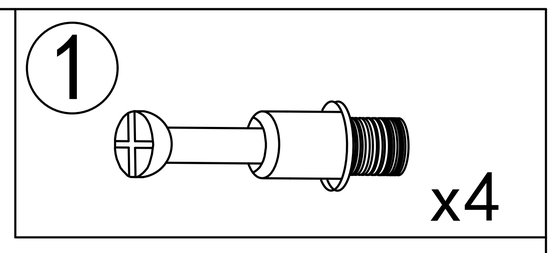

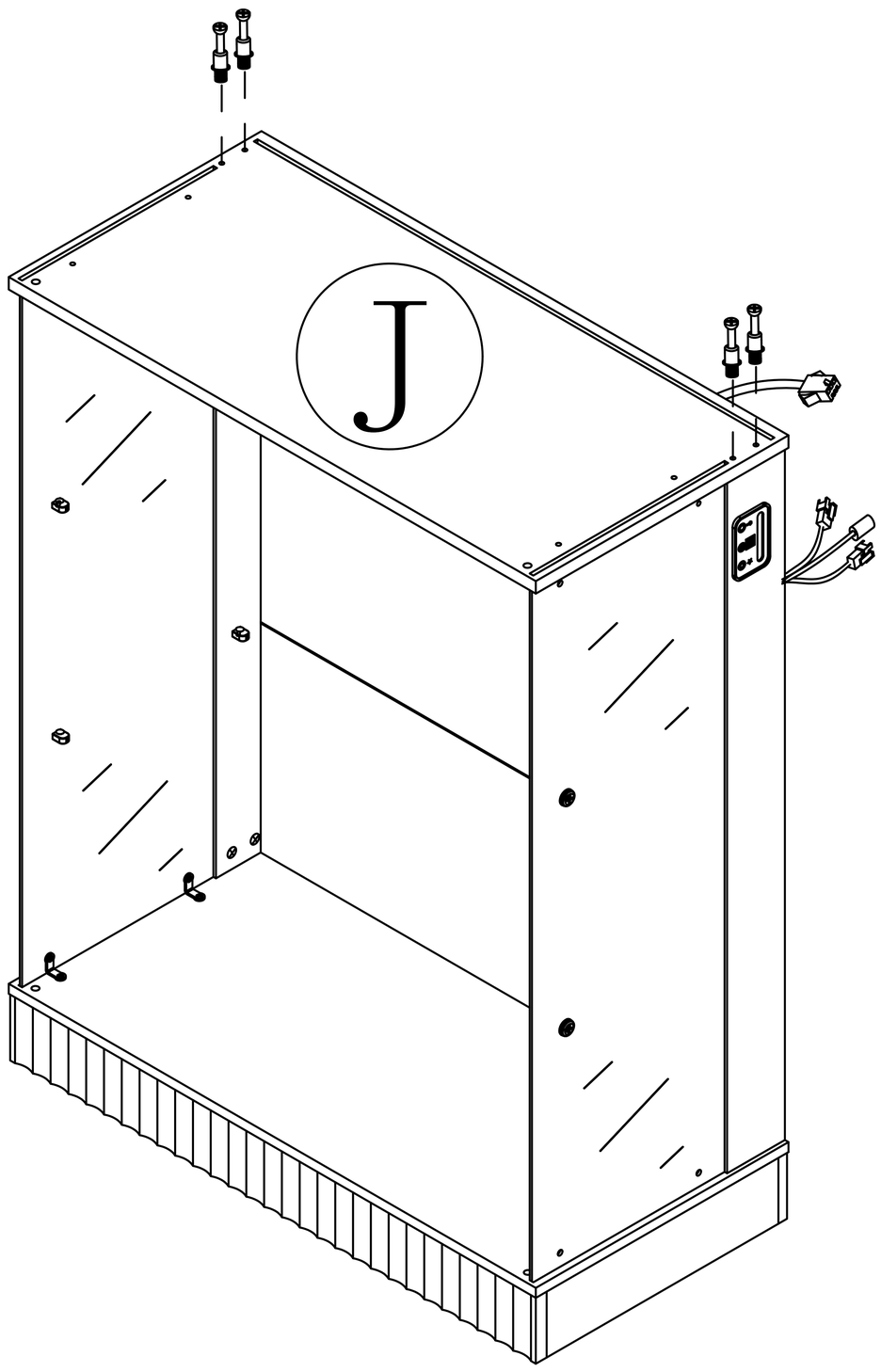

Step 22

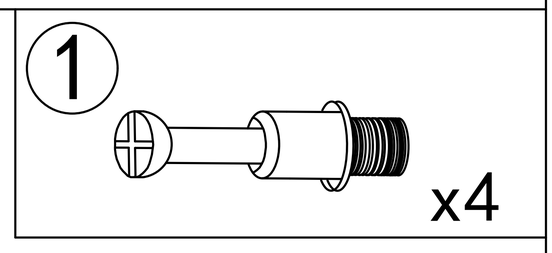

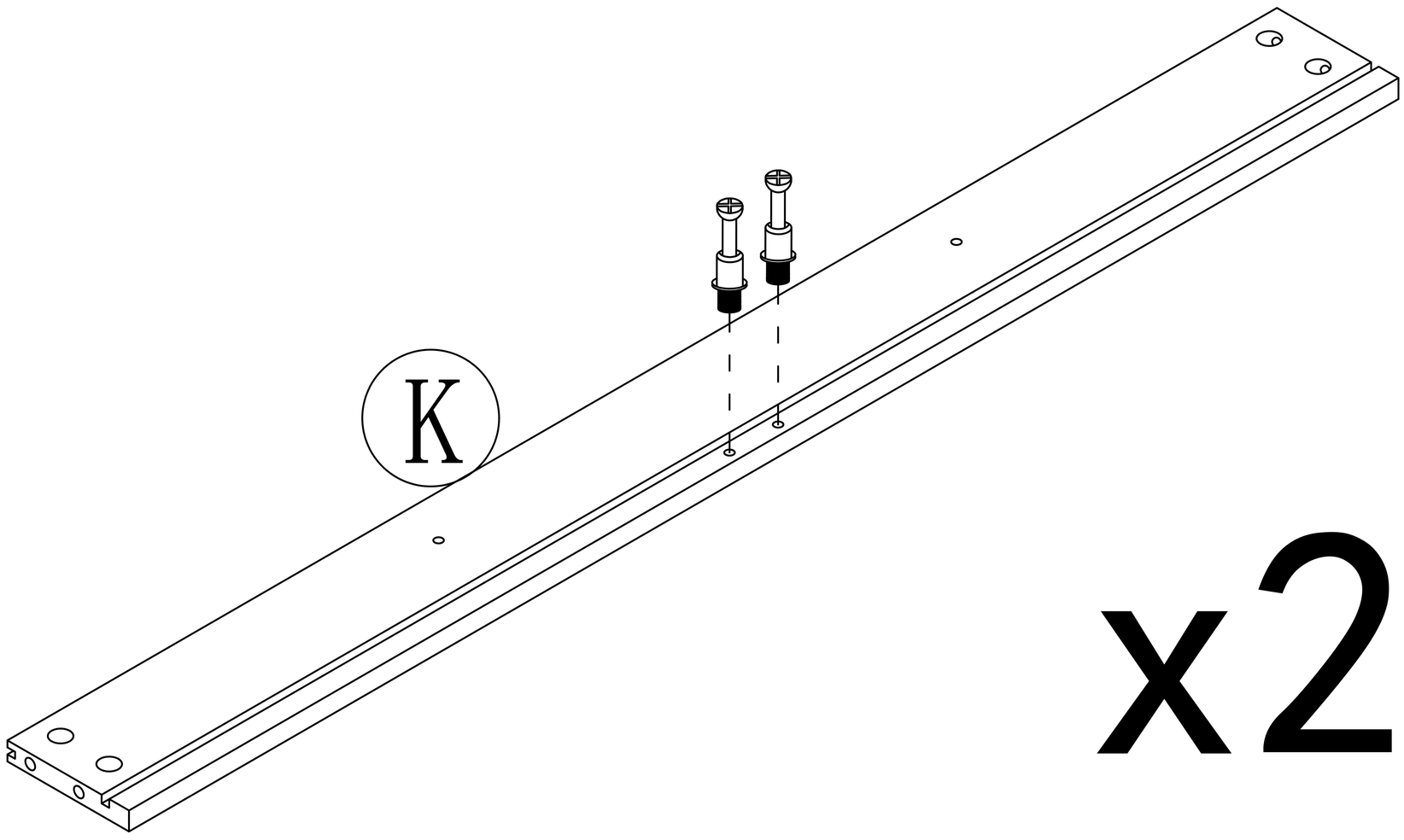

Step 23

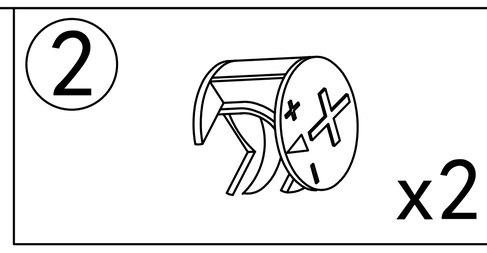

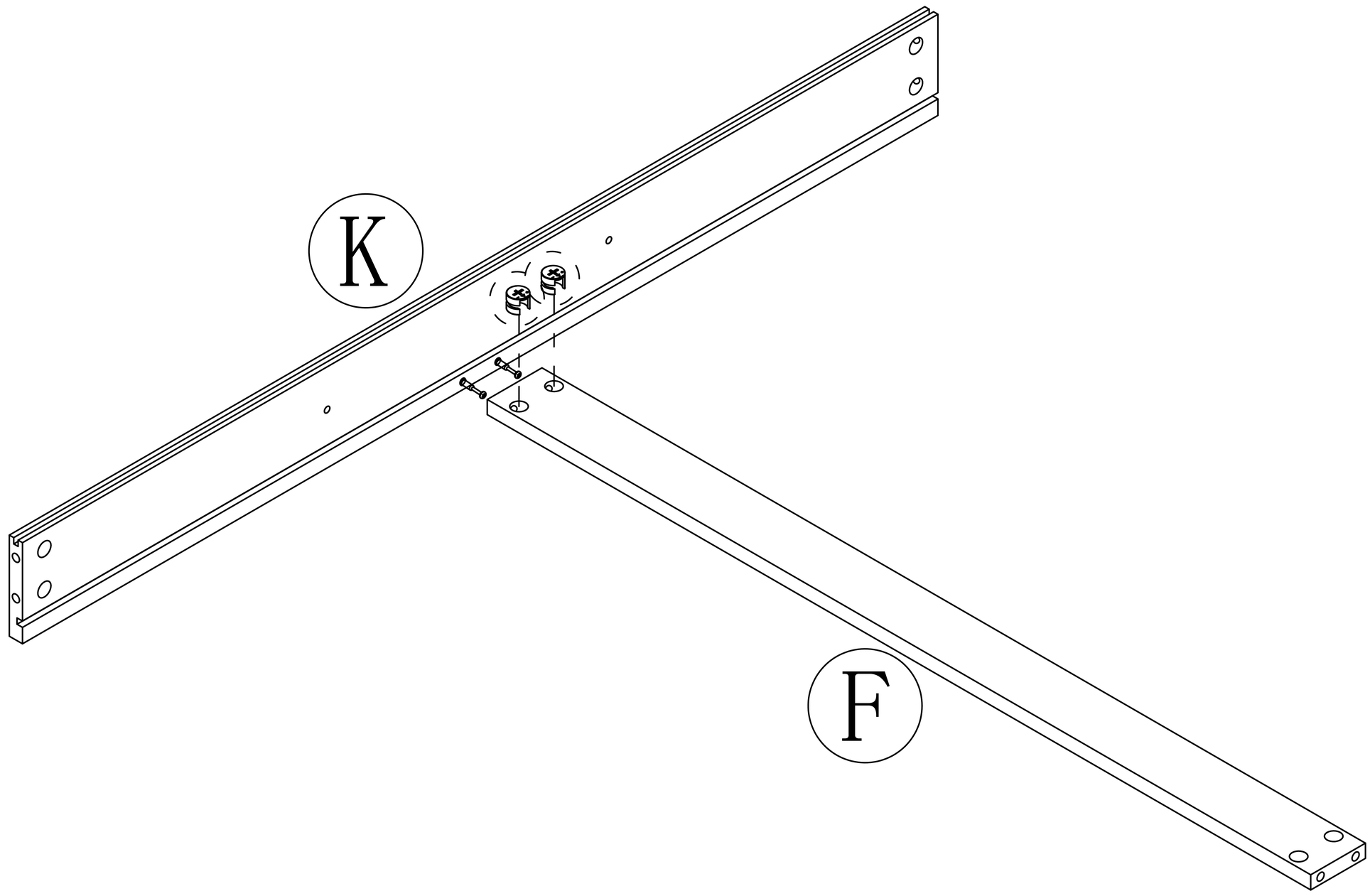

Step 24

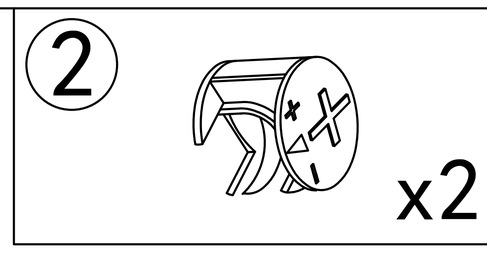

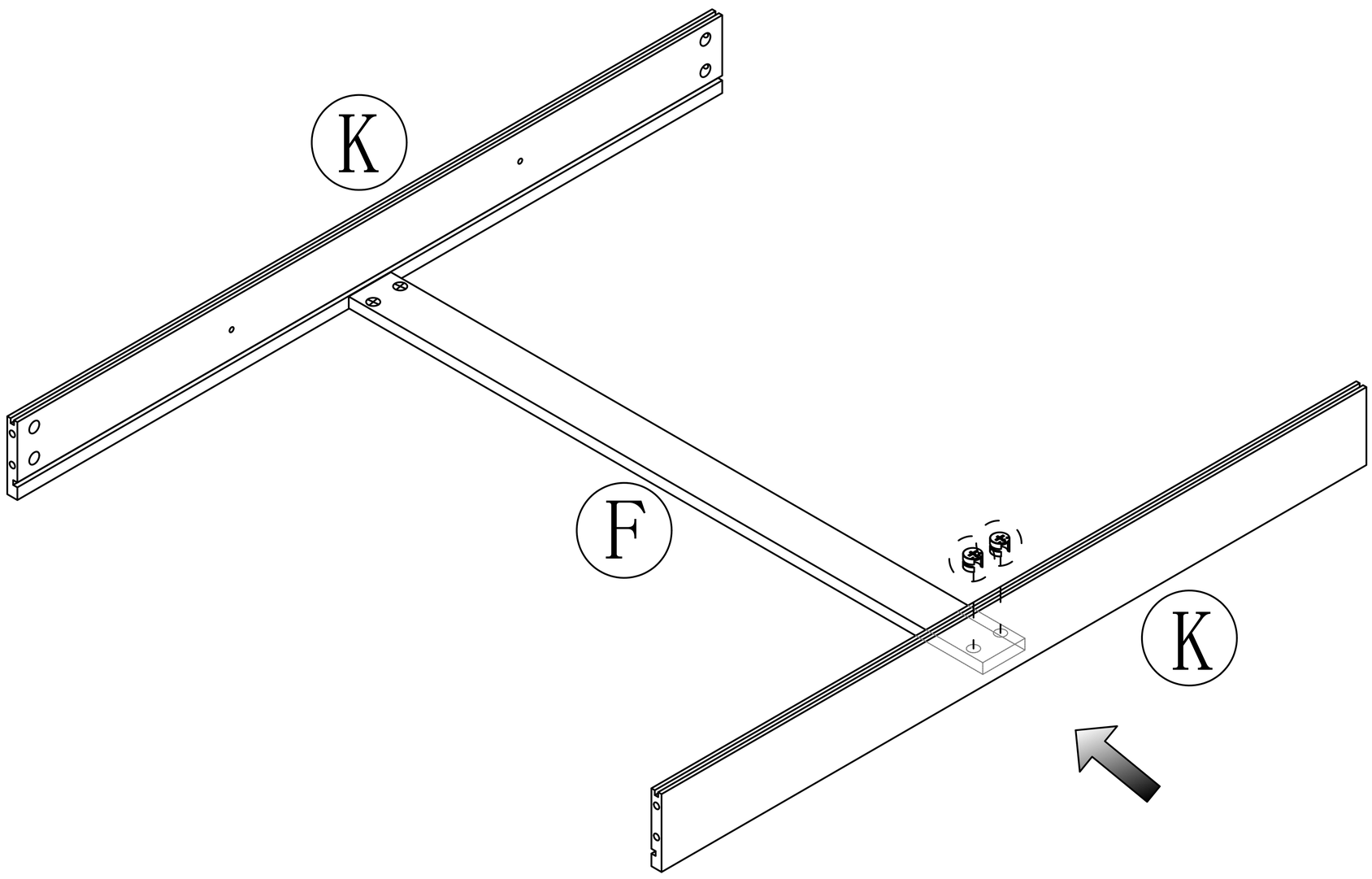

Step 25

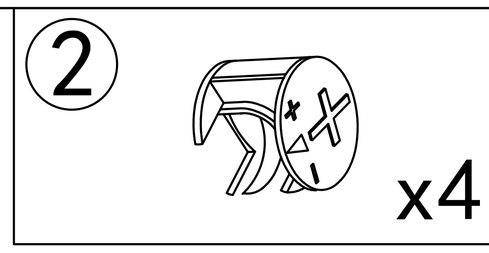

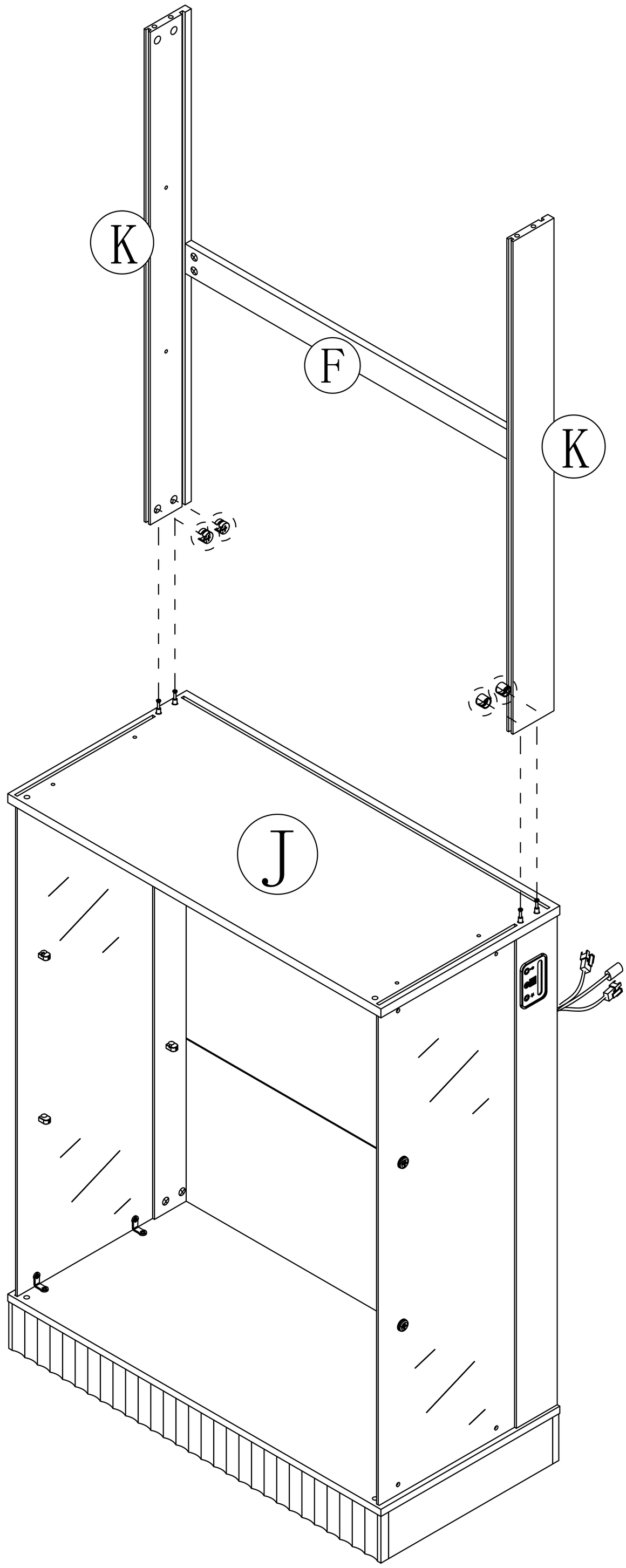

Step 26

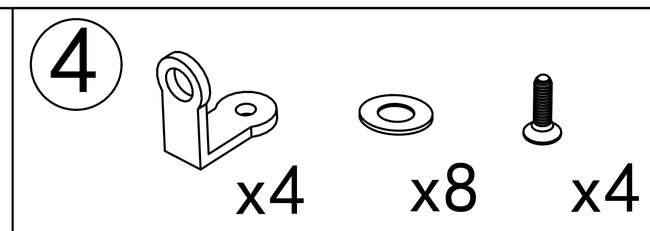

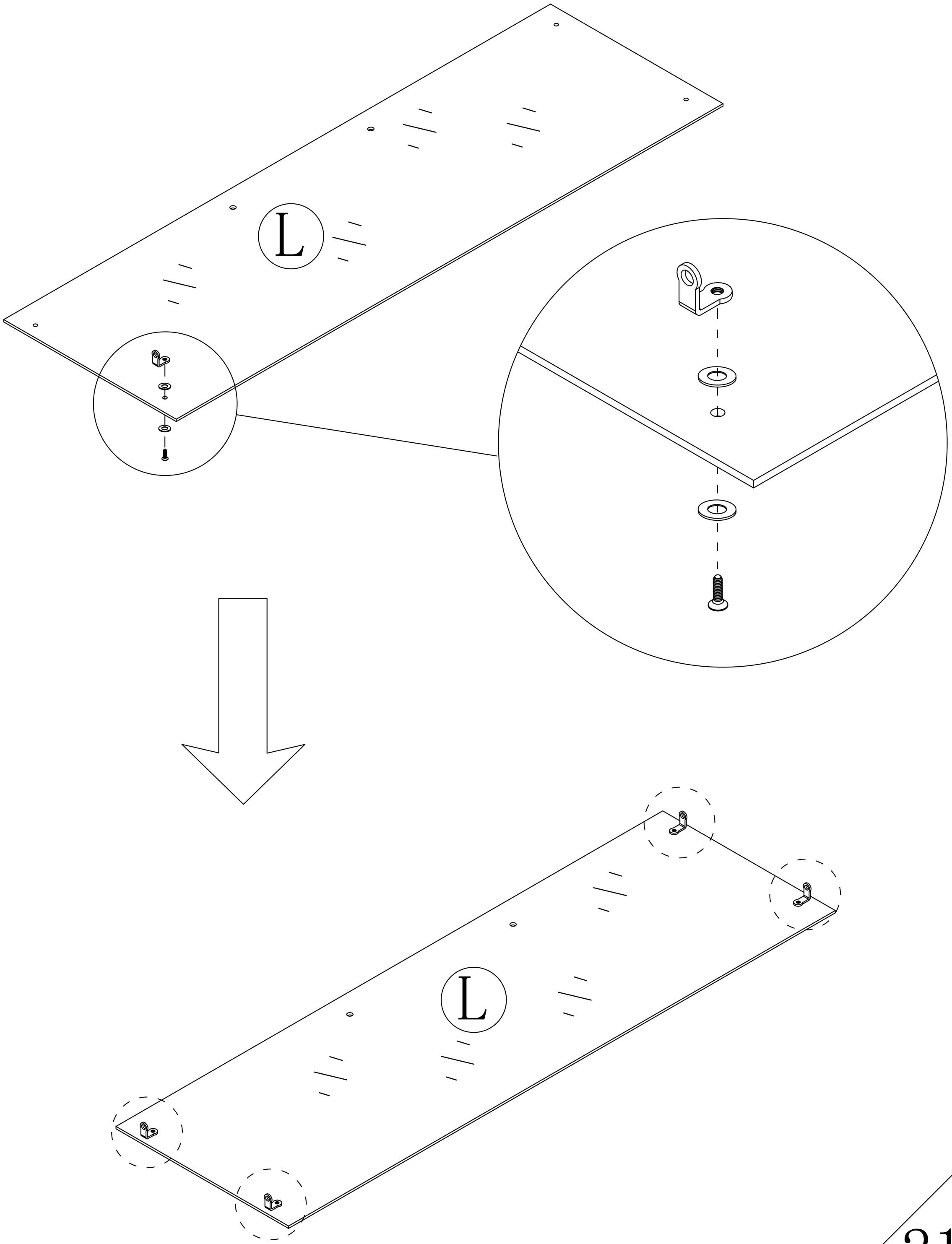

Step 27

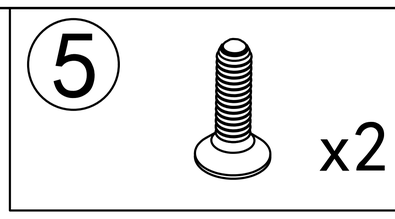

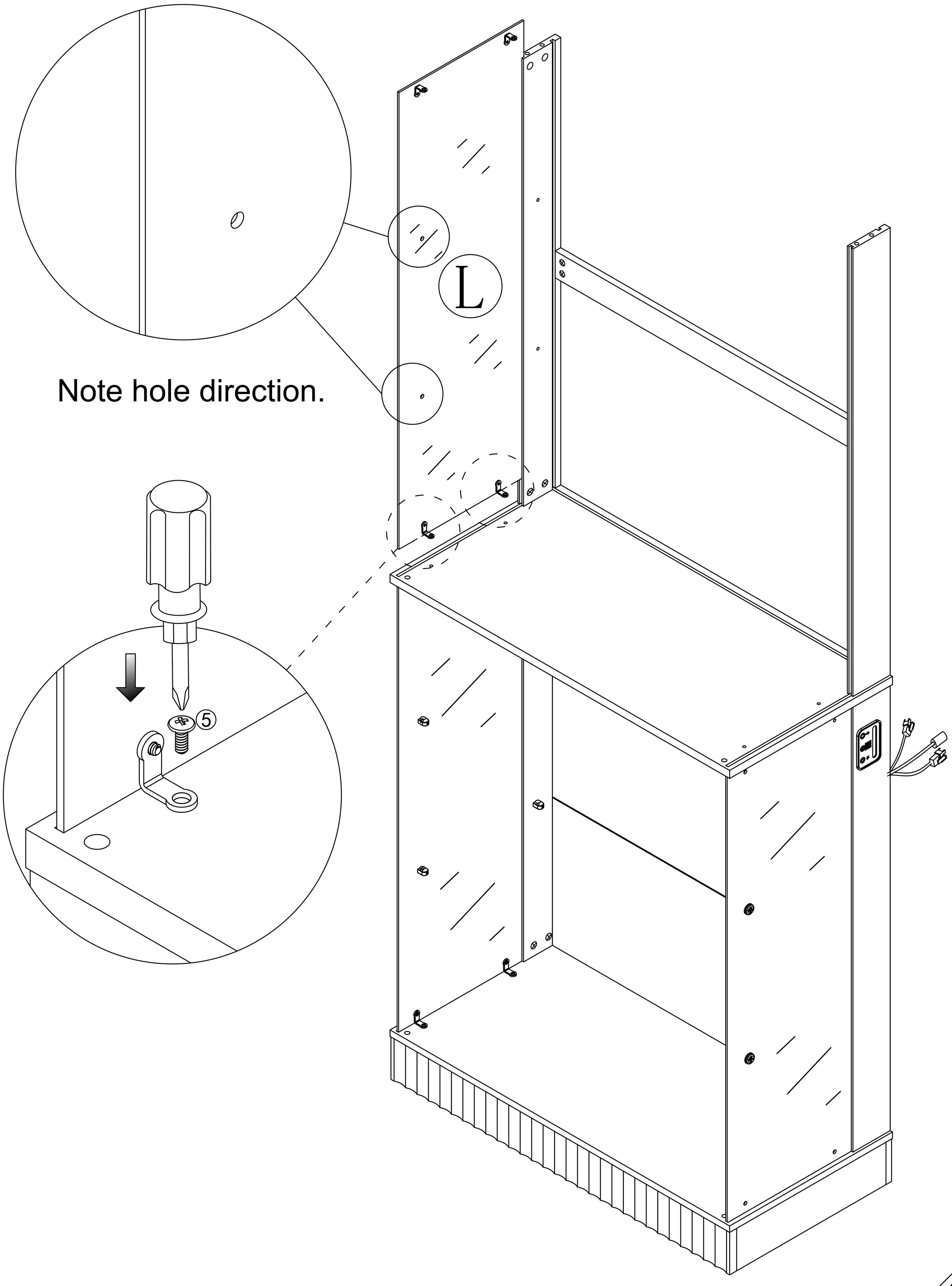

Step 28

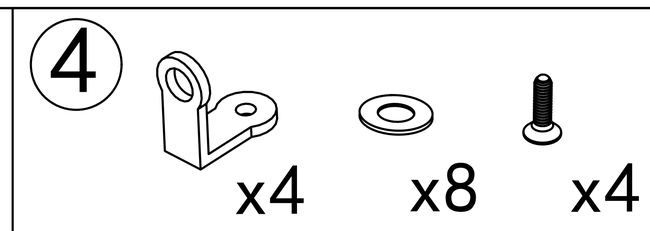

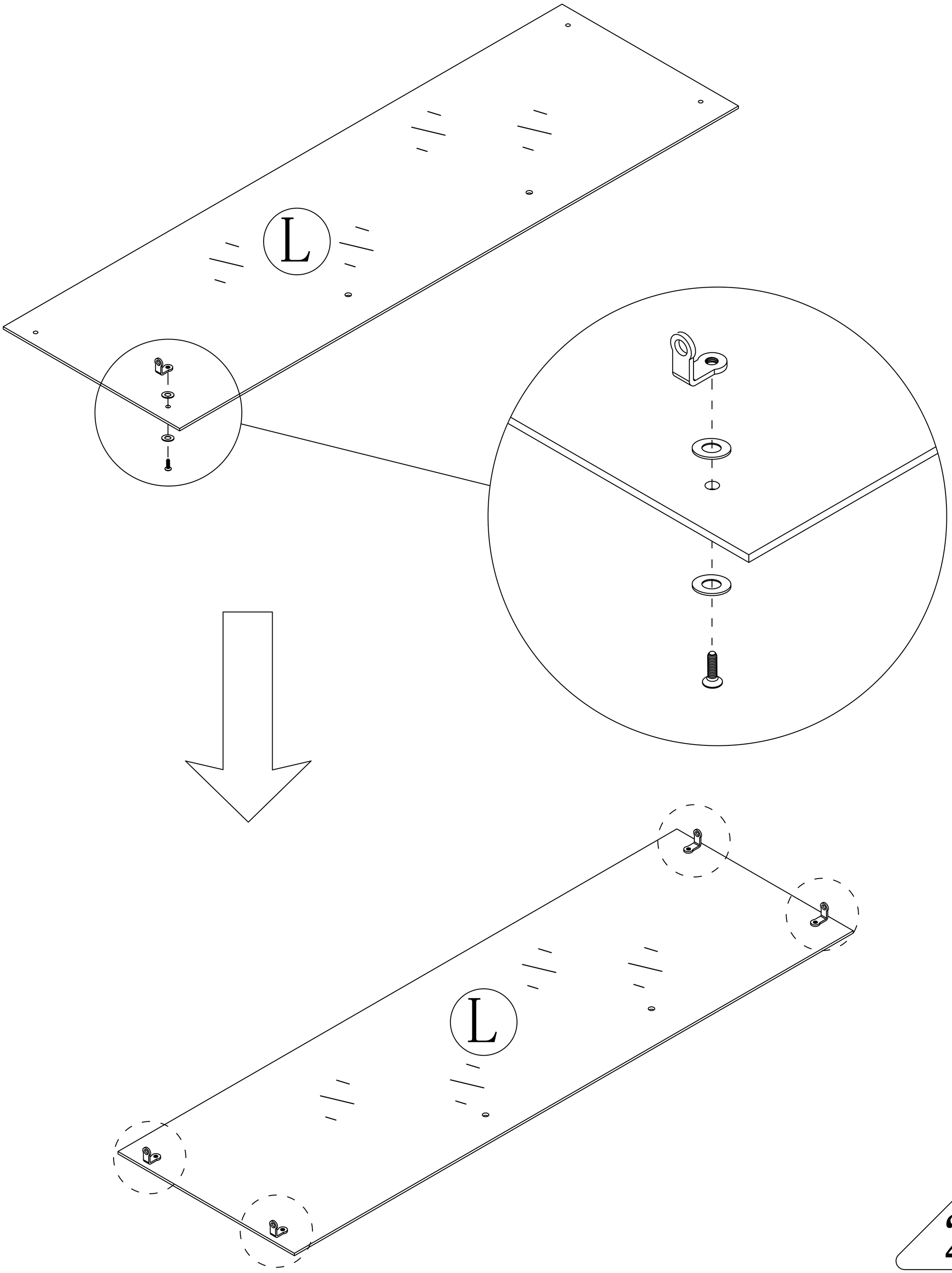

Step 29

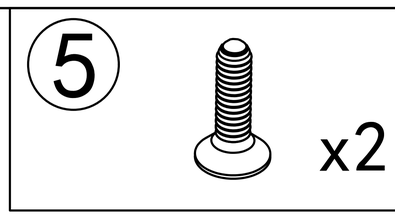

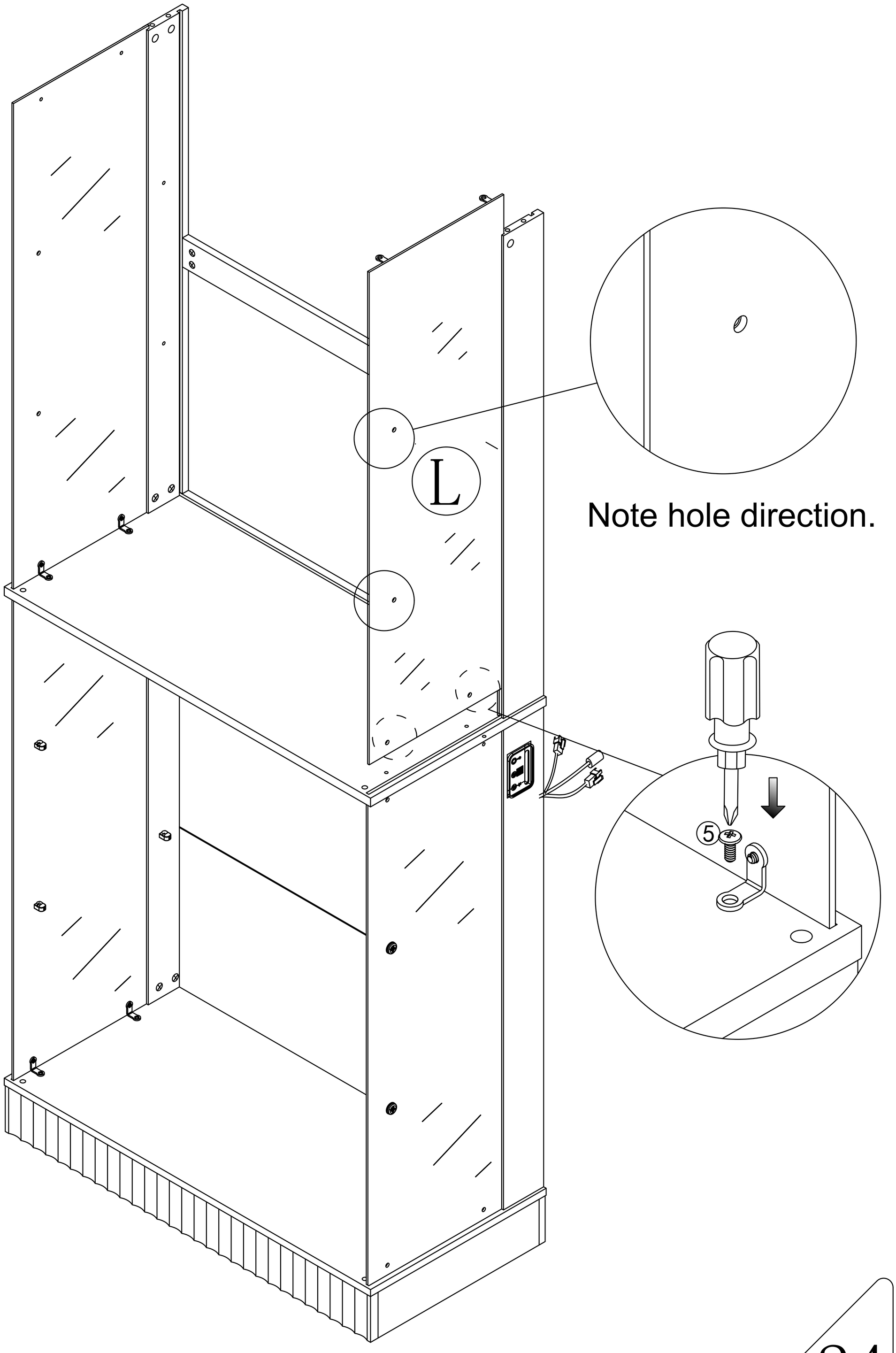

Step 30

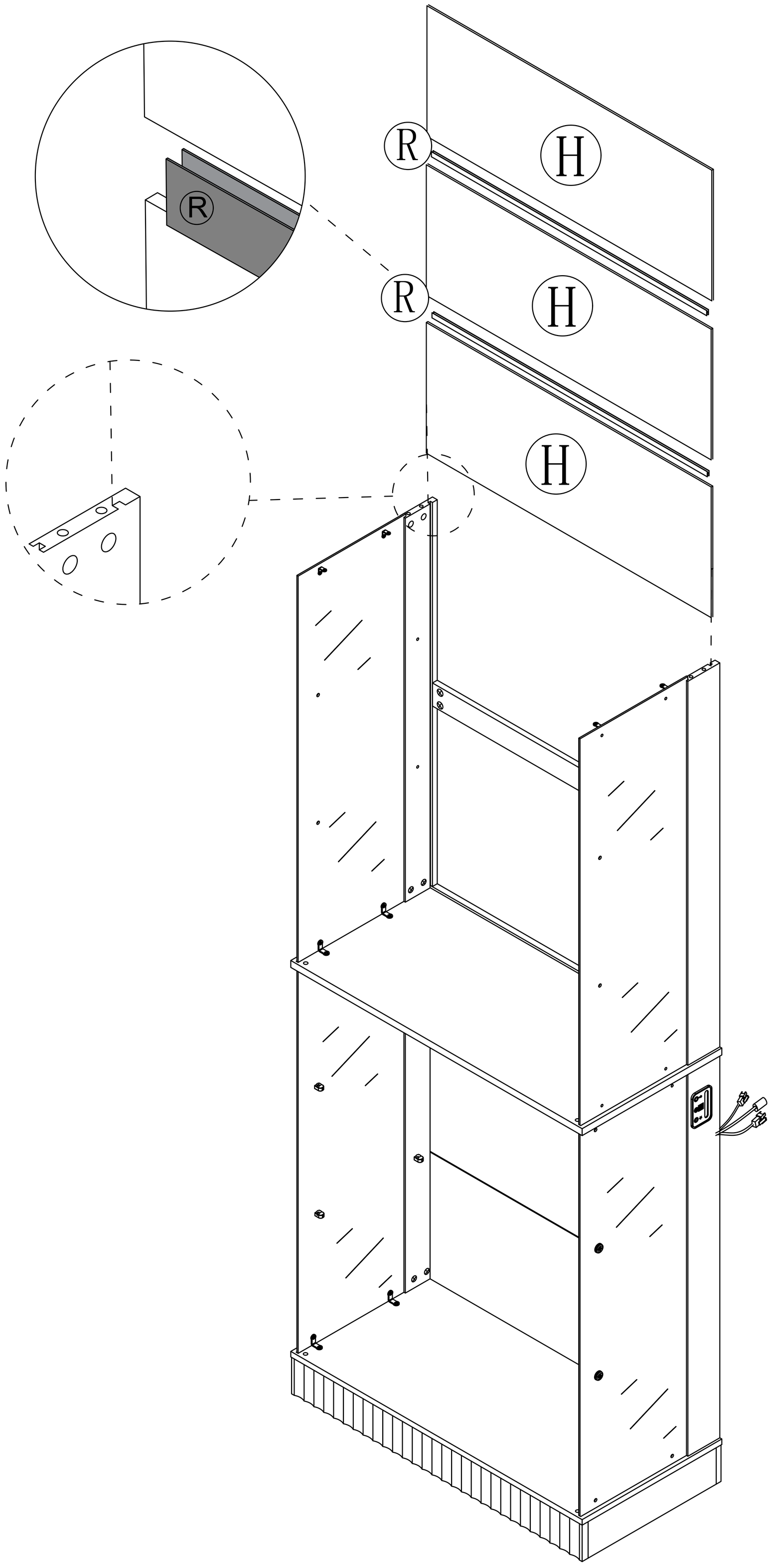

Step 31

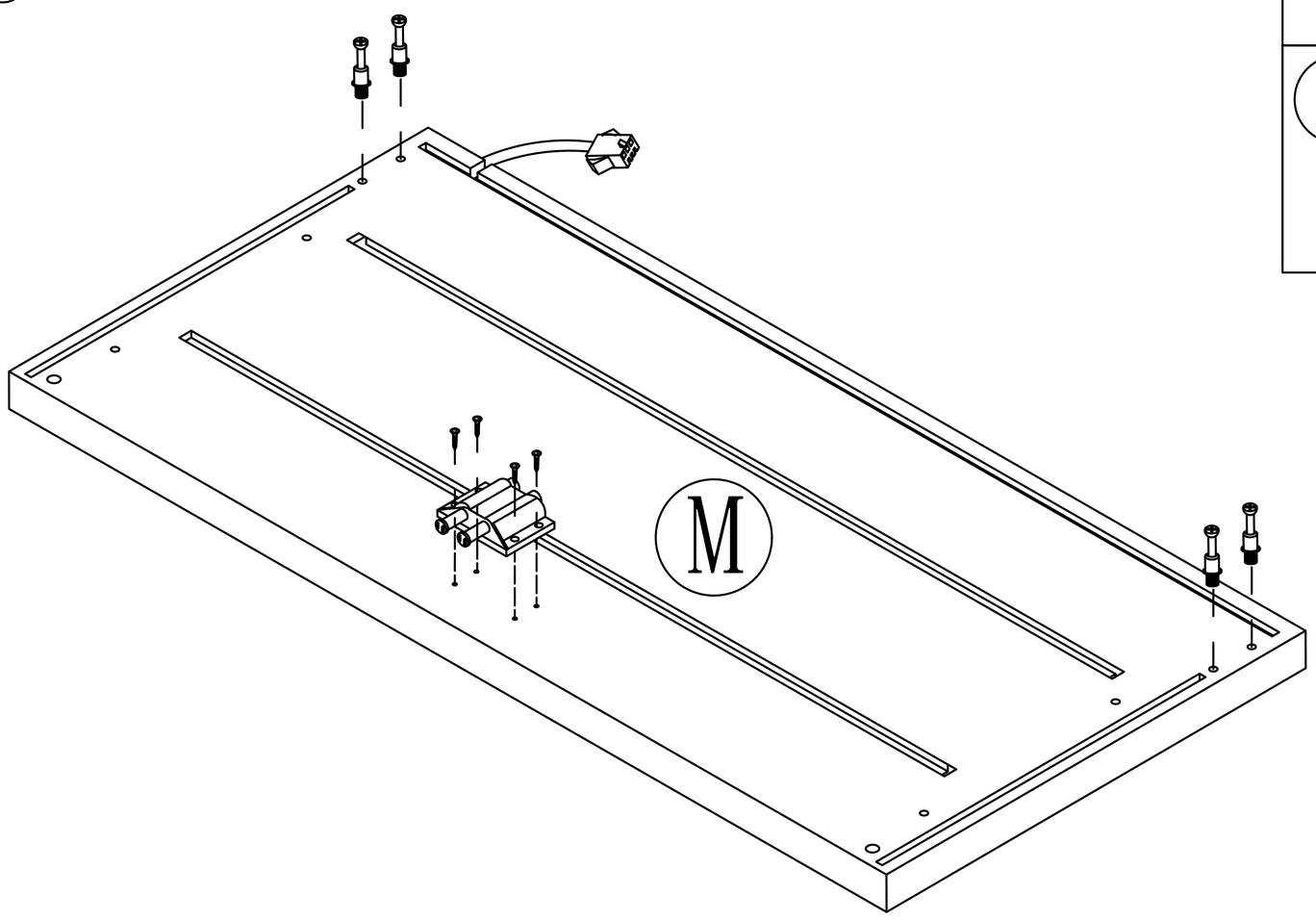

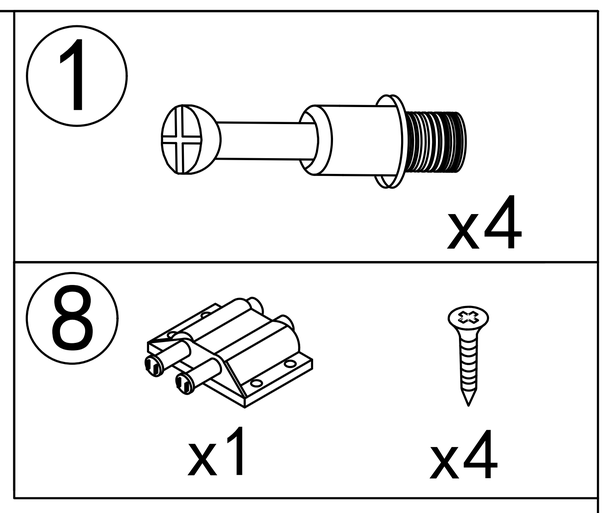

Step 32

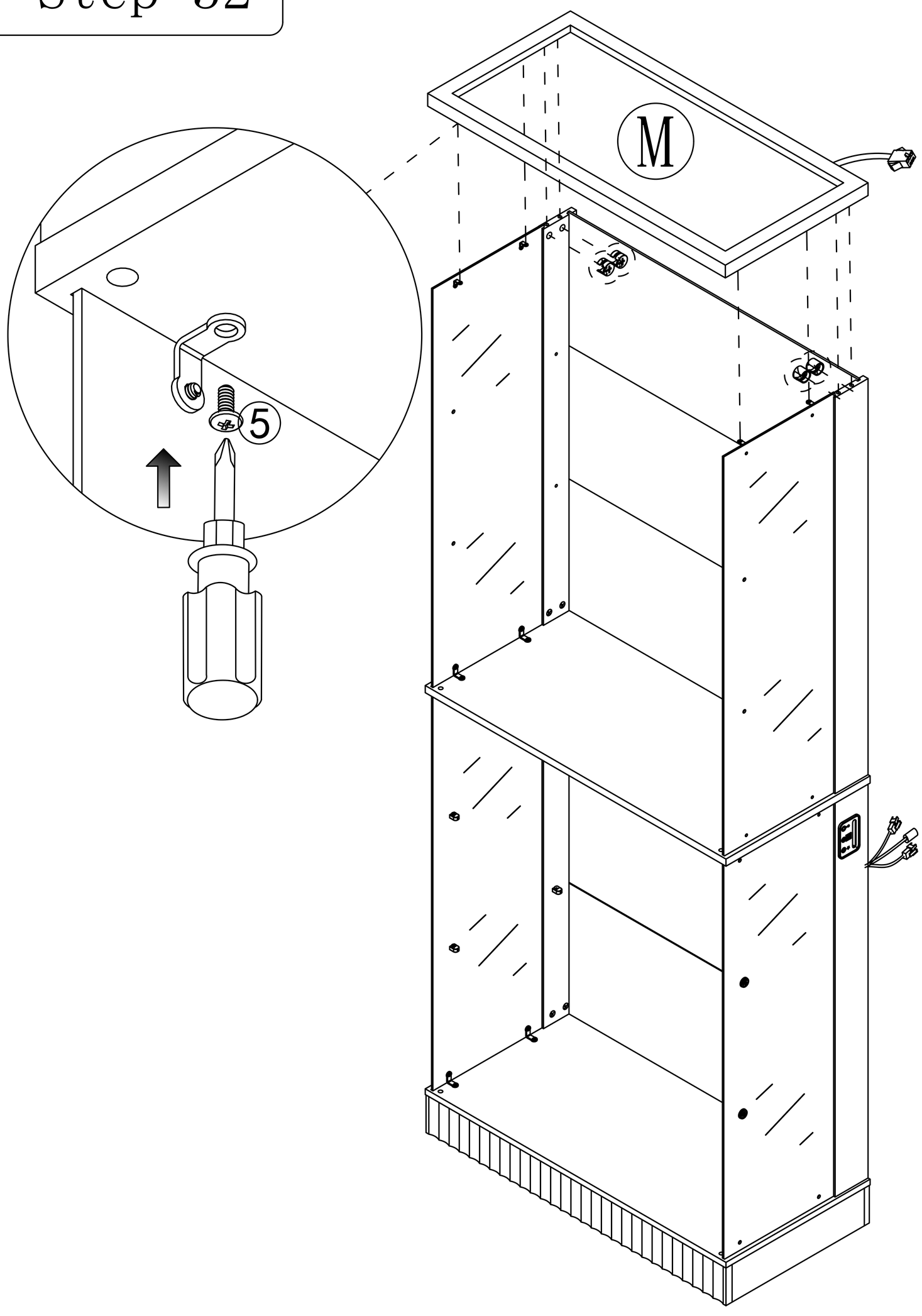

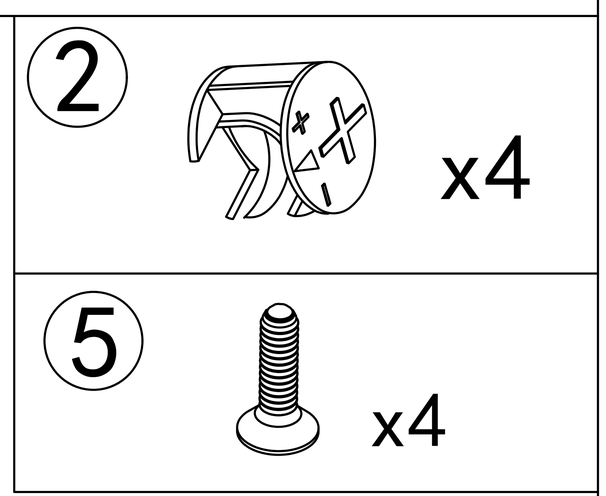

Step 33

6 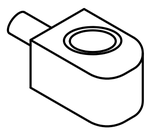 x4

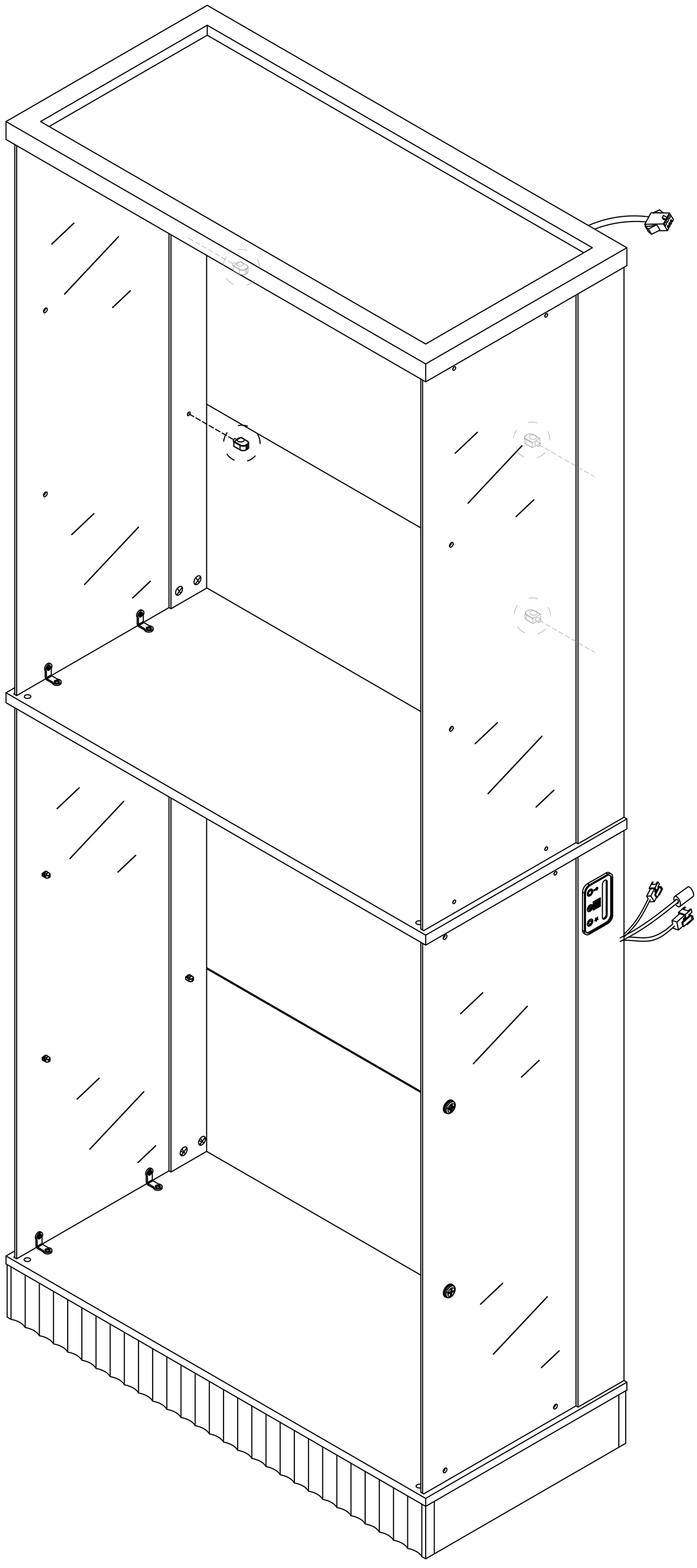

Step 34

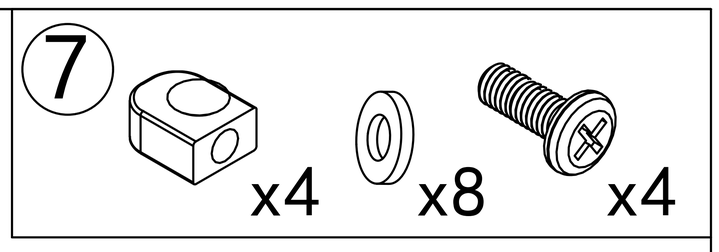

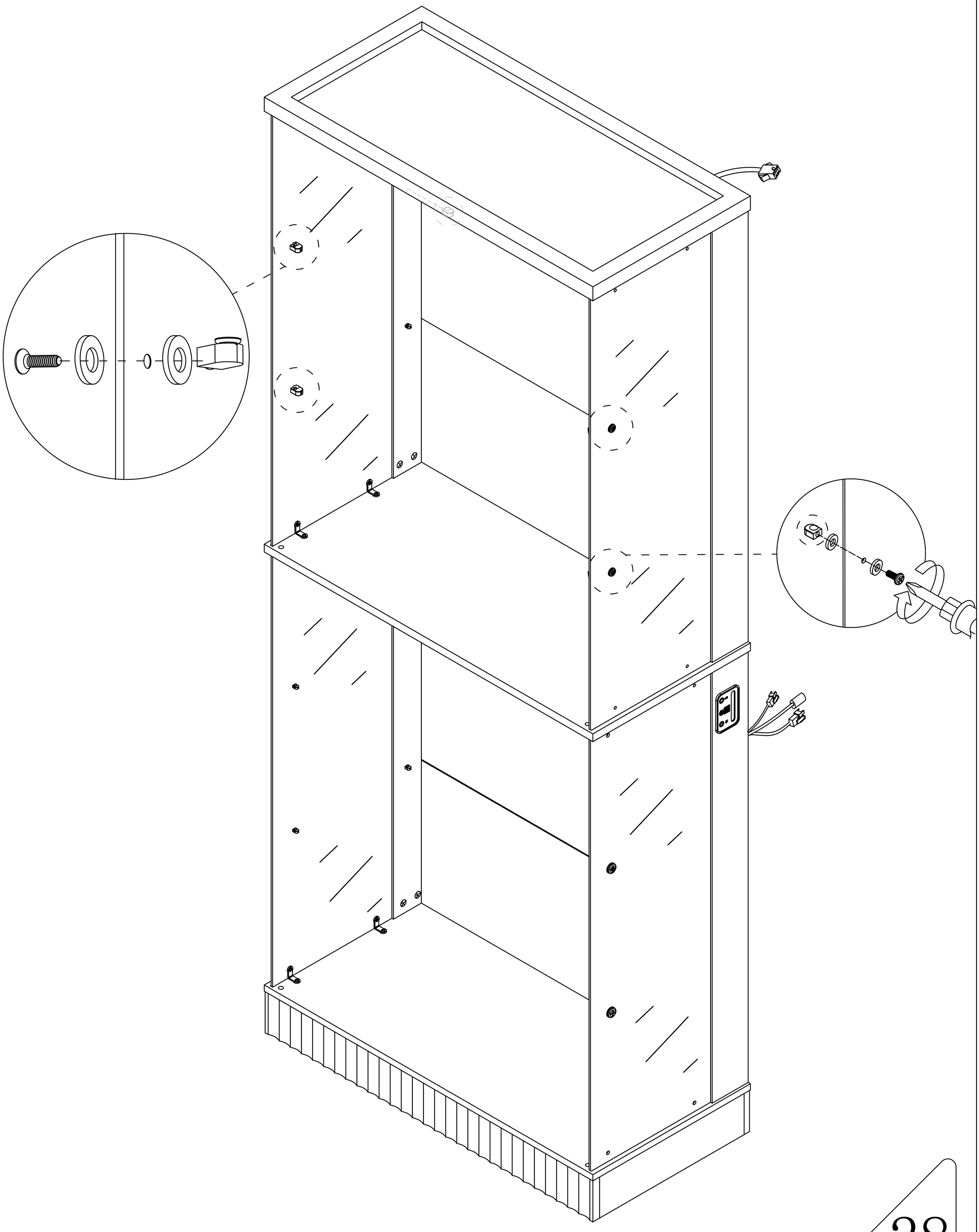

Step 35

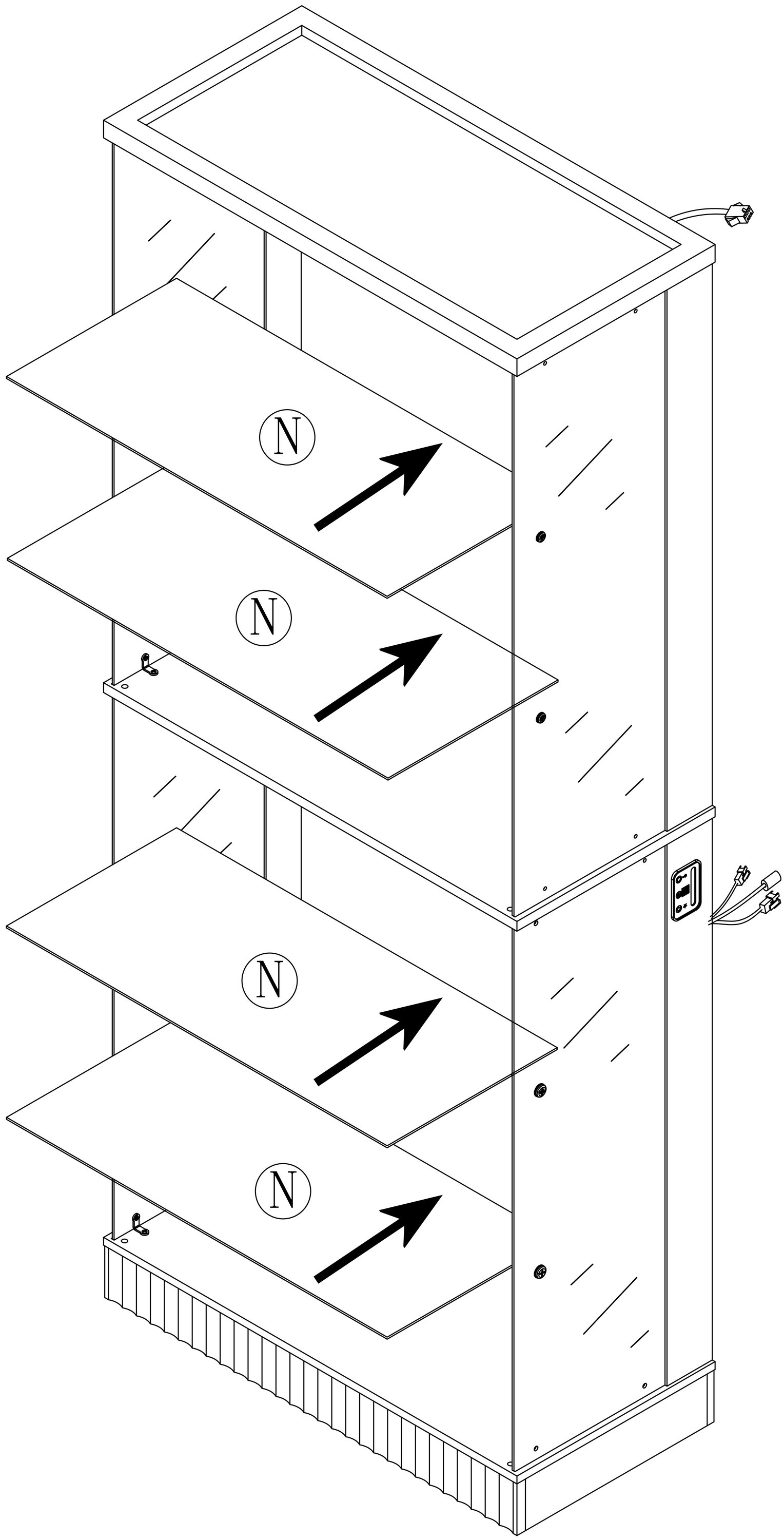

Step 36

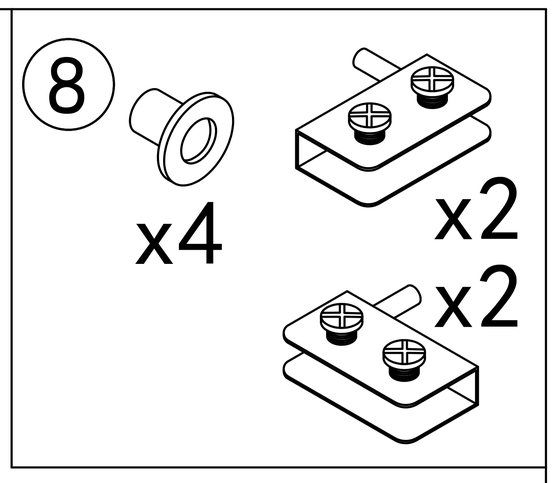

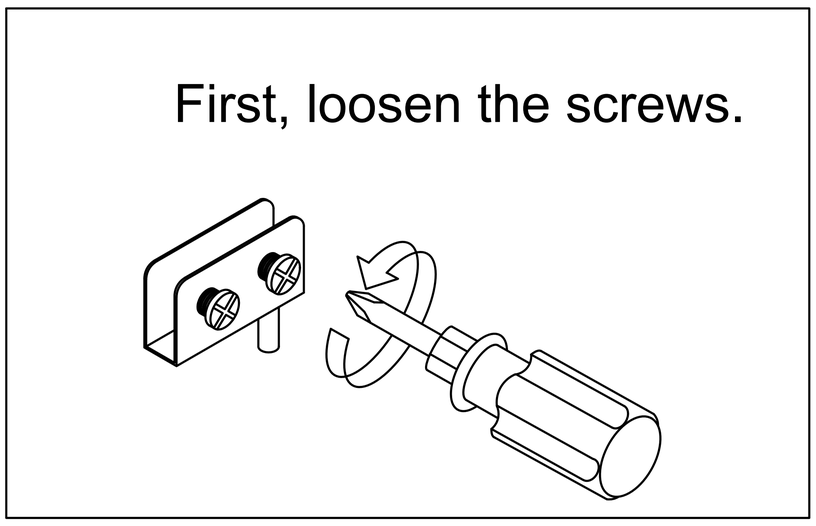

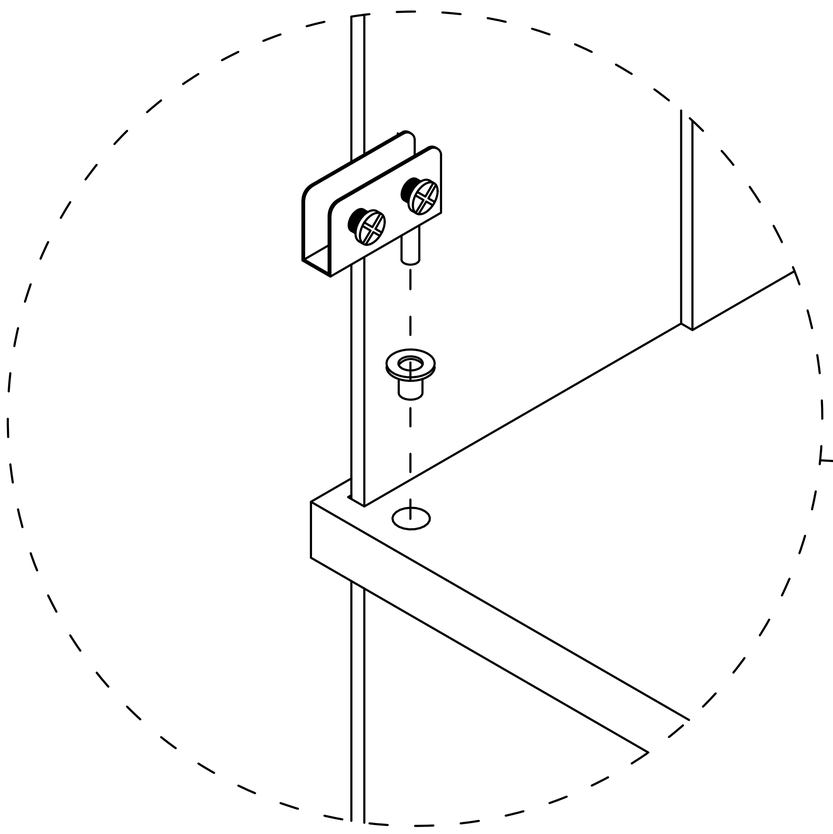

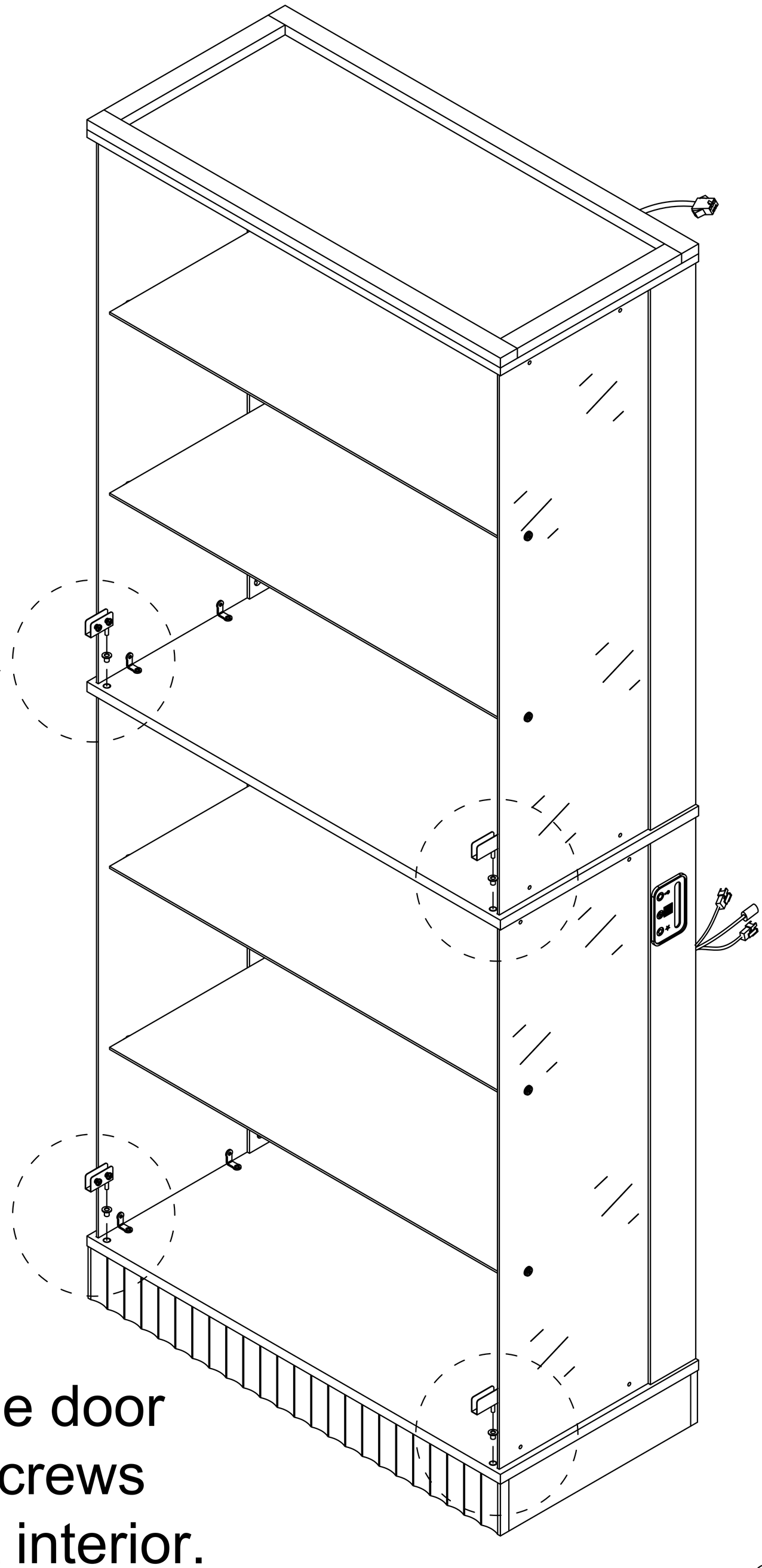

Note the orientation of the door hinge: the end with the screws faces toward the cabinet interior.

Step 37

First, loosen the screws.

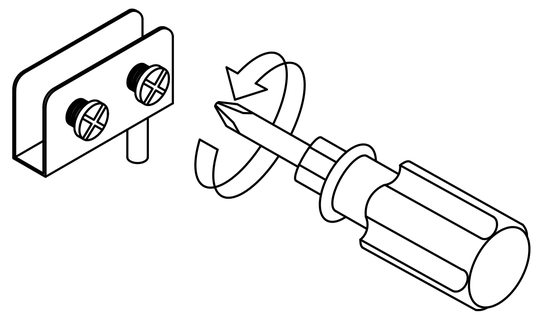

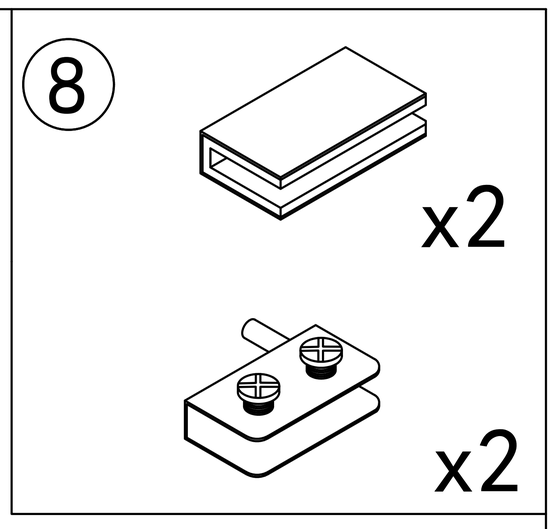

1. Take out the white foam pad
2. Fit the pad around the edge of the glass panel
3. Then slide the metal clamp over the assembled position
4. Finally, tighten the screws securely

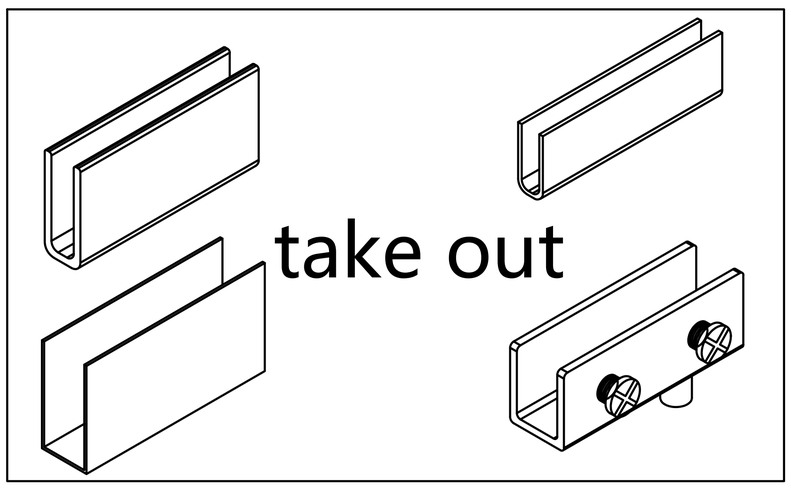

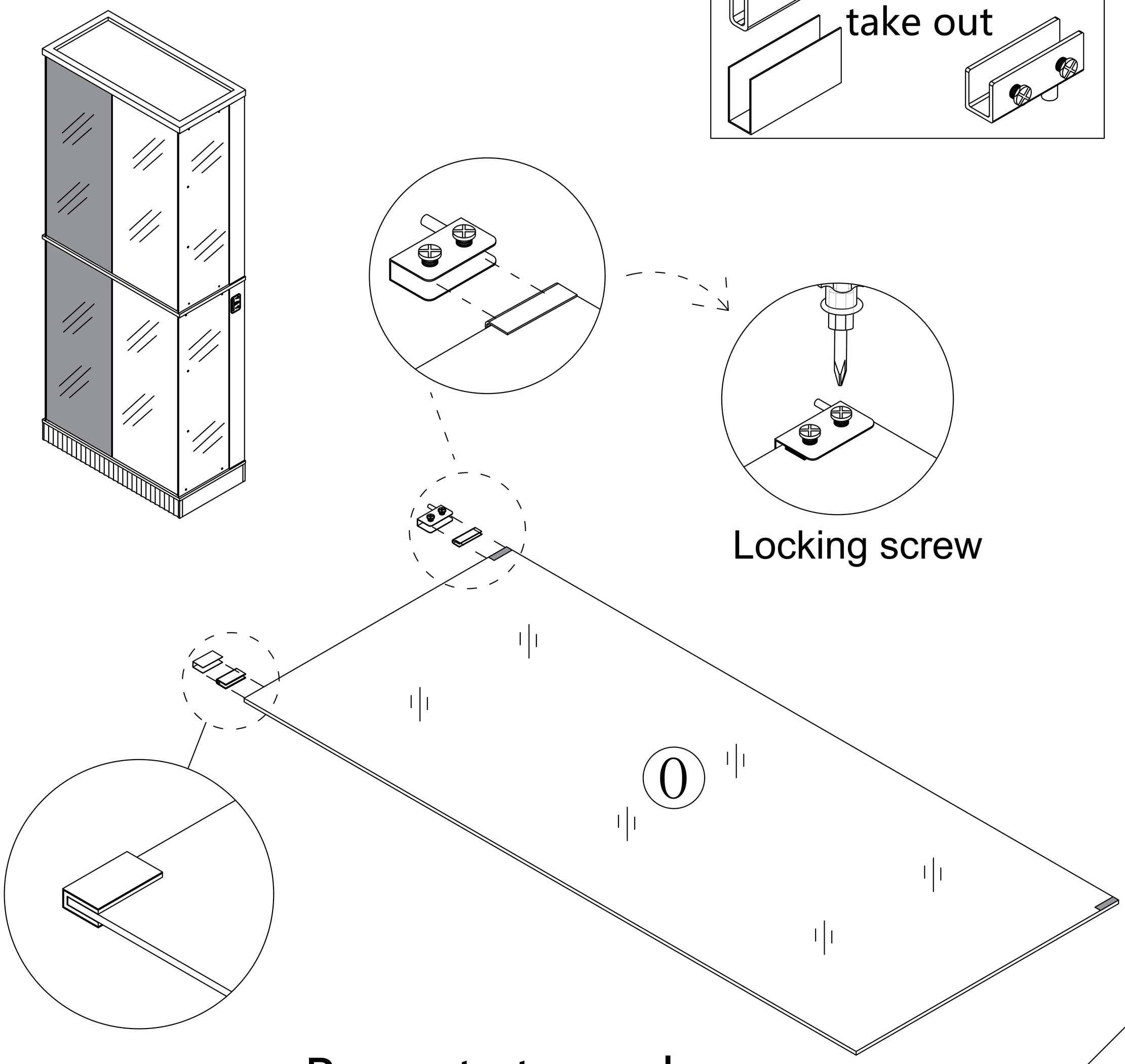

Repeat steps above.

Step 38

First, loosen the screws.

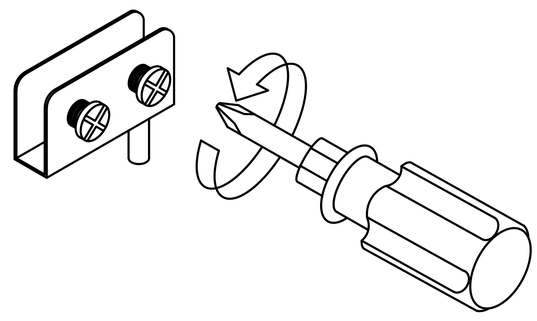

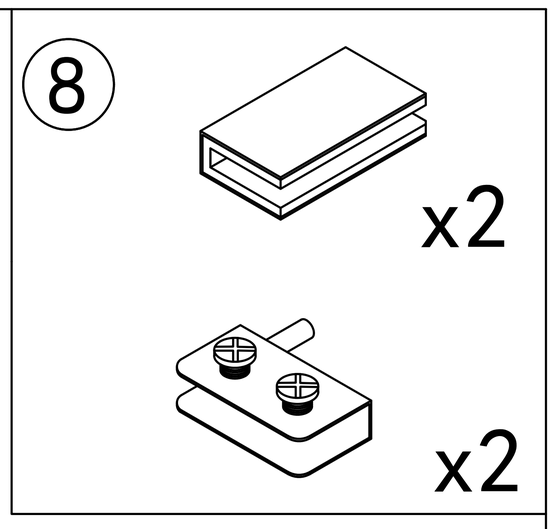

1. Take out the white foam pad
2. Fit the pad around the edge of the glass panel
3. Then slide the metal clamp over the assembled position
4. Finally, tighten the screws securely

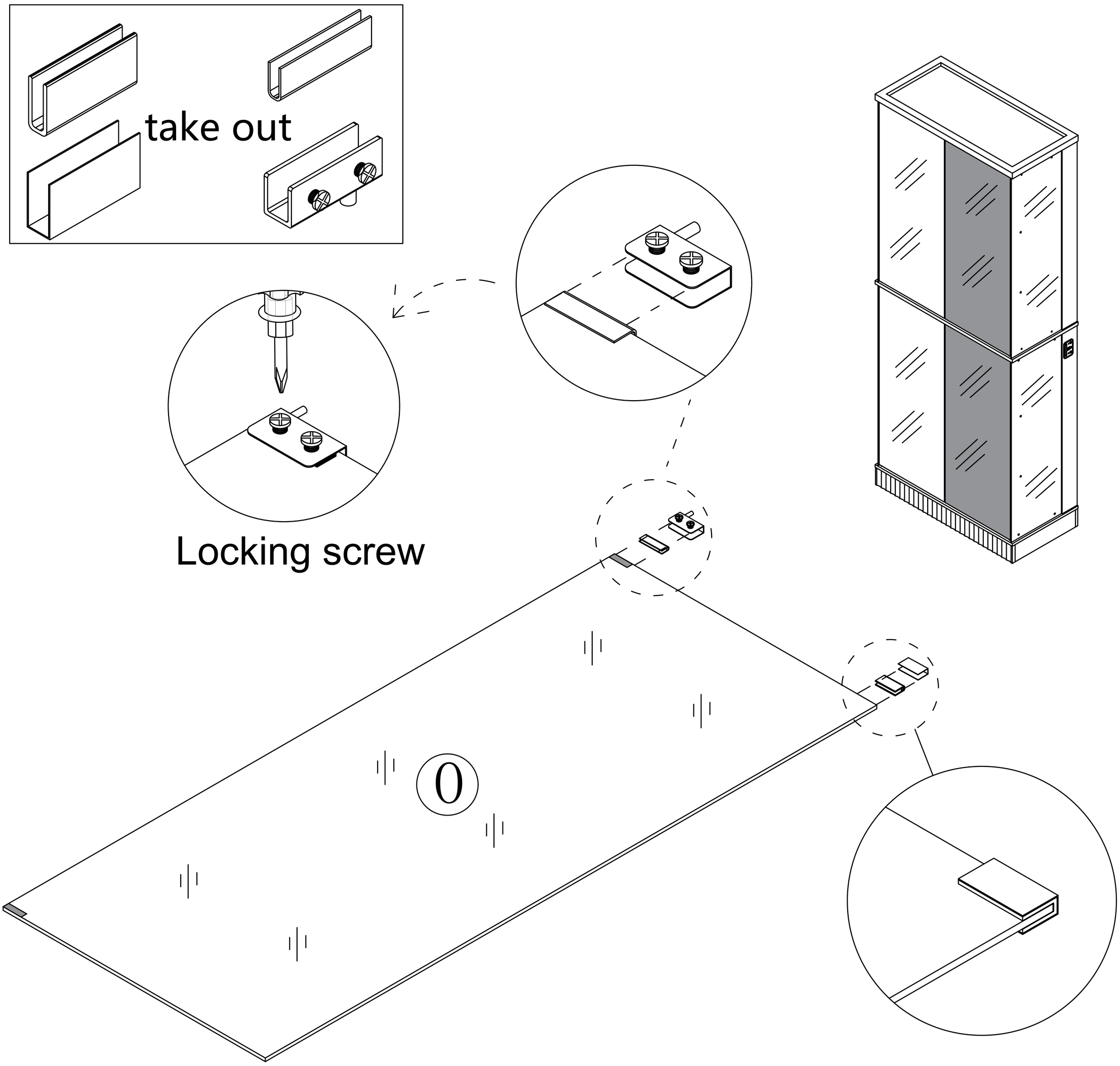

Repeat steps above.

Step 39

Pay attention to the direction of the door hinge during installation

8 x2

When installing a glass door, it is recommended to have two people install it to avoid the glass door colliding or hitting oneself.

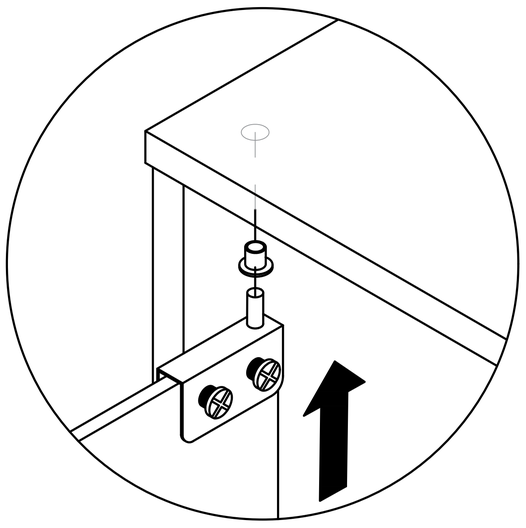

first

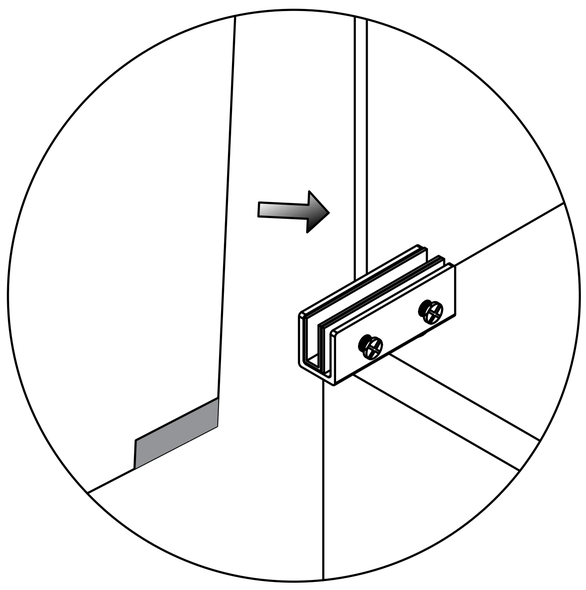

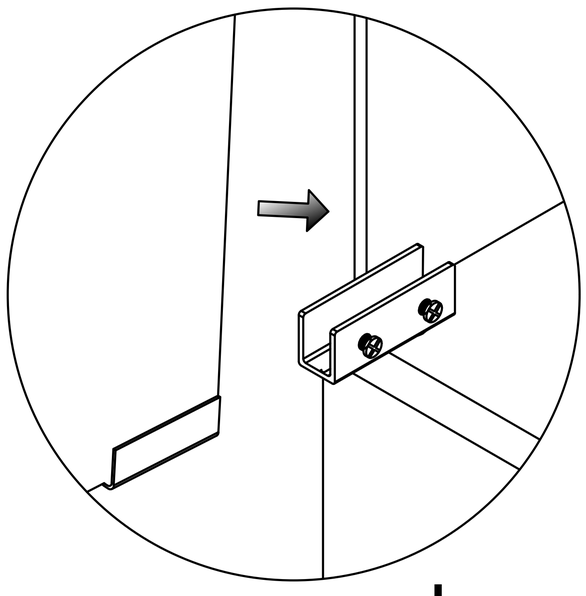

second

Insert the glass into the door hinge's slot.

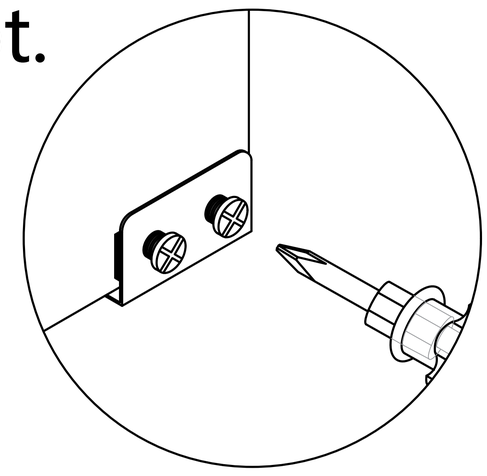

third

Locking screw

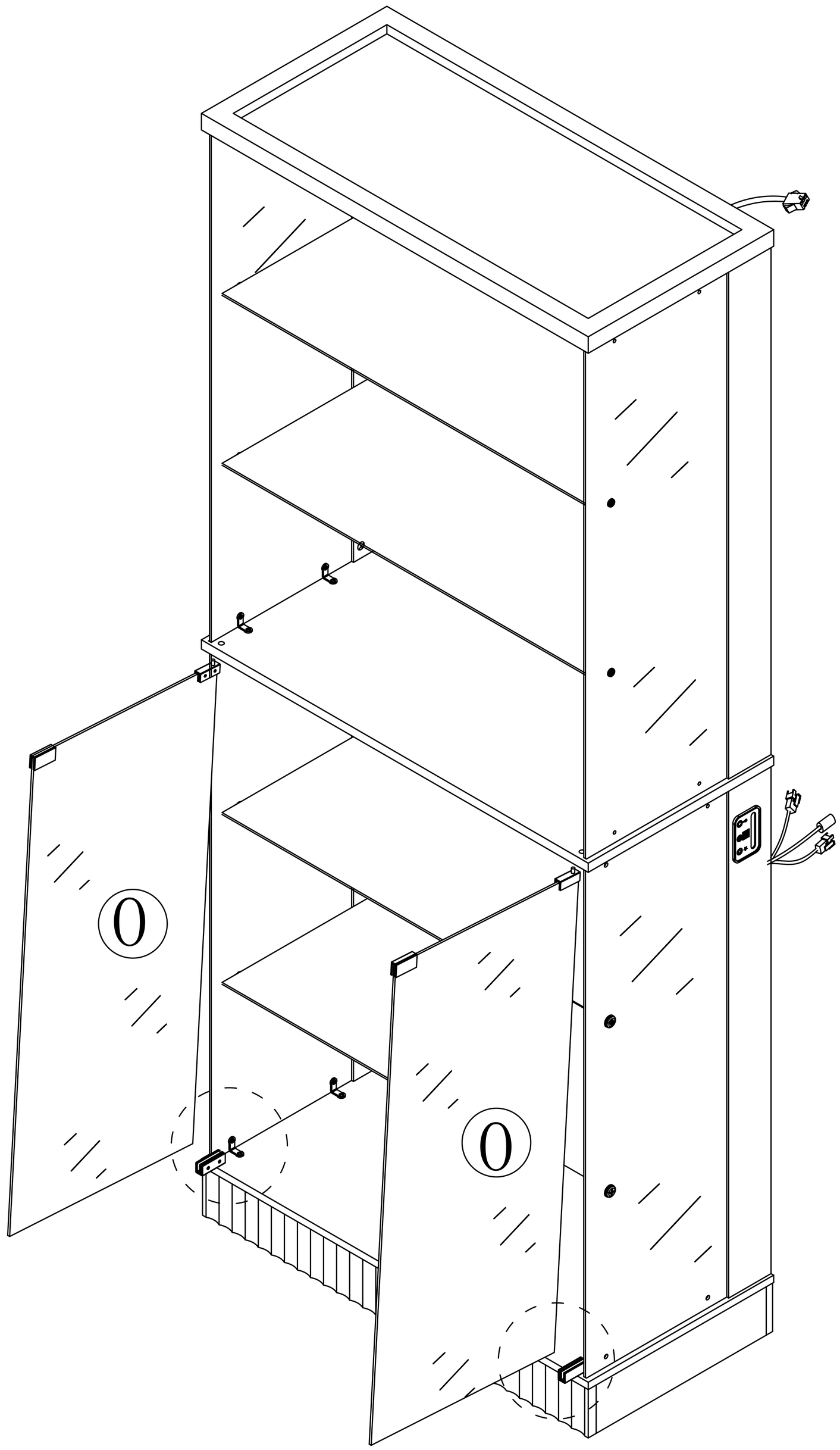

Step 40

Pay attention to the direction of the door hinge during installation

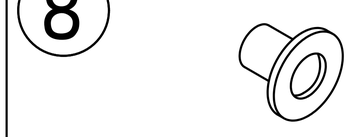

When installing a glass door, it is recommended to have two people install it to avoid the glass door colliding or hitting oneself.

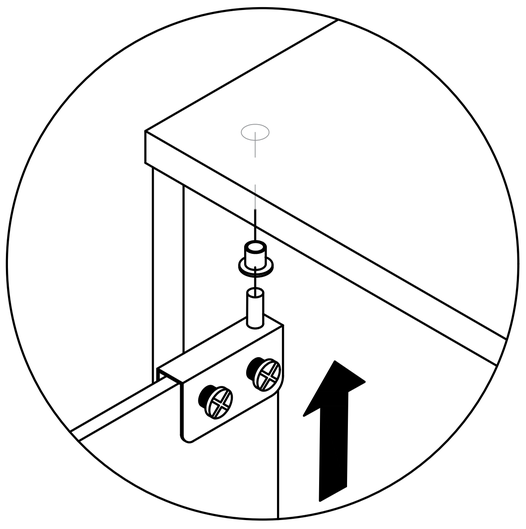

first

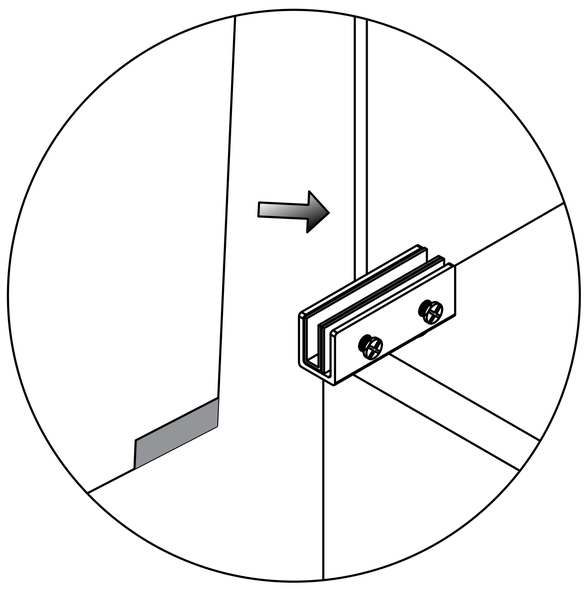

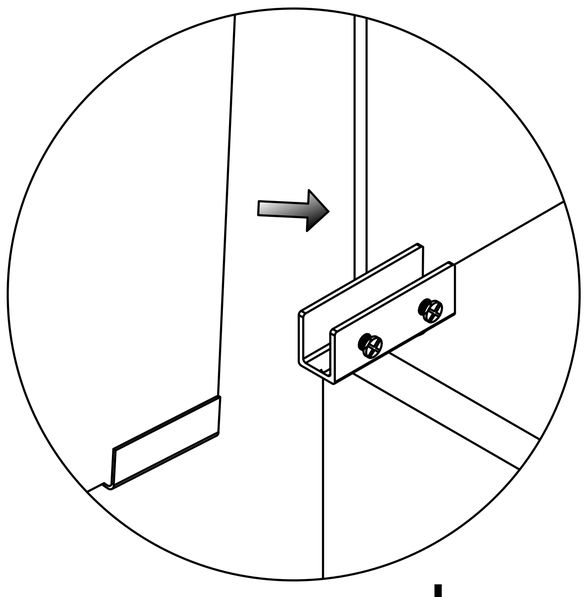

second

Insert the glass into the door hinge's slot.

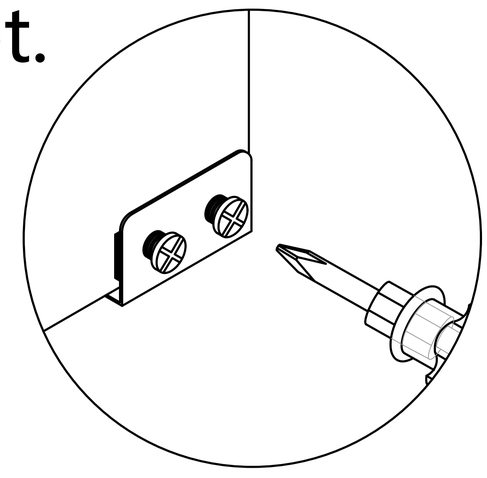

third

Locking screw

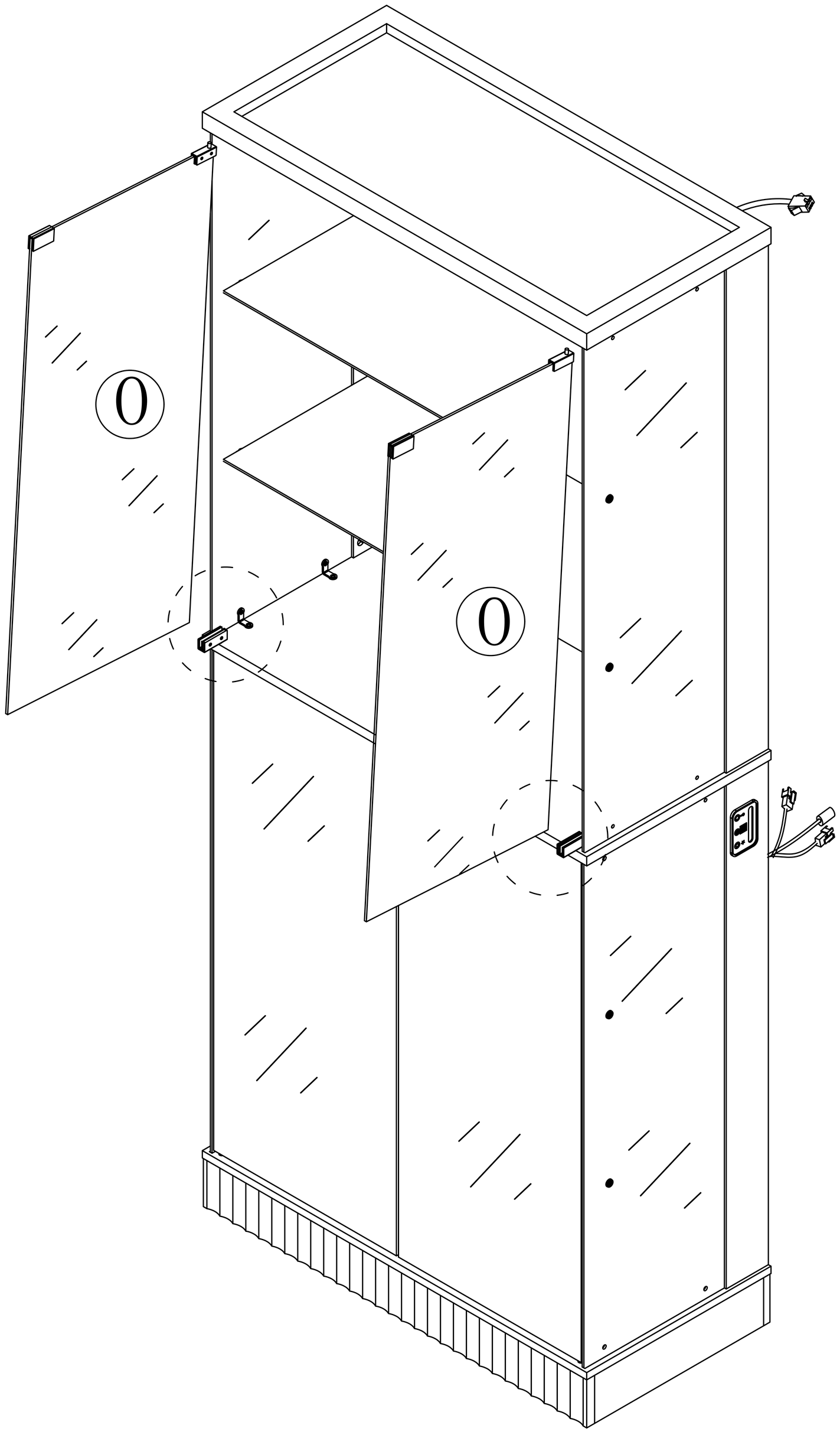

Tip: Turning the door lock to the right will close it

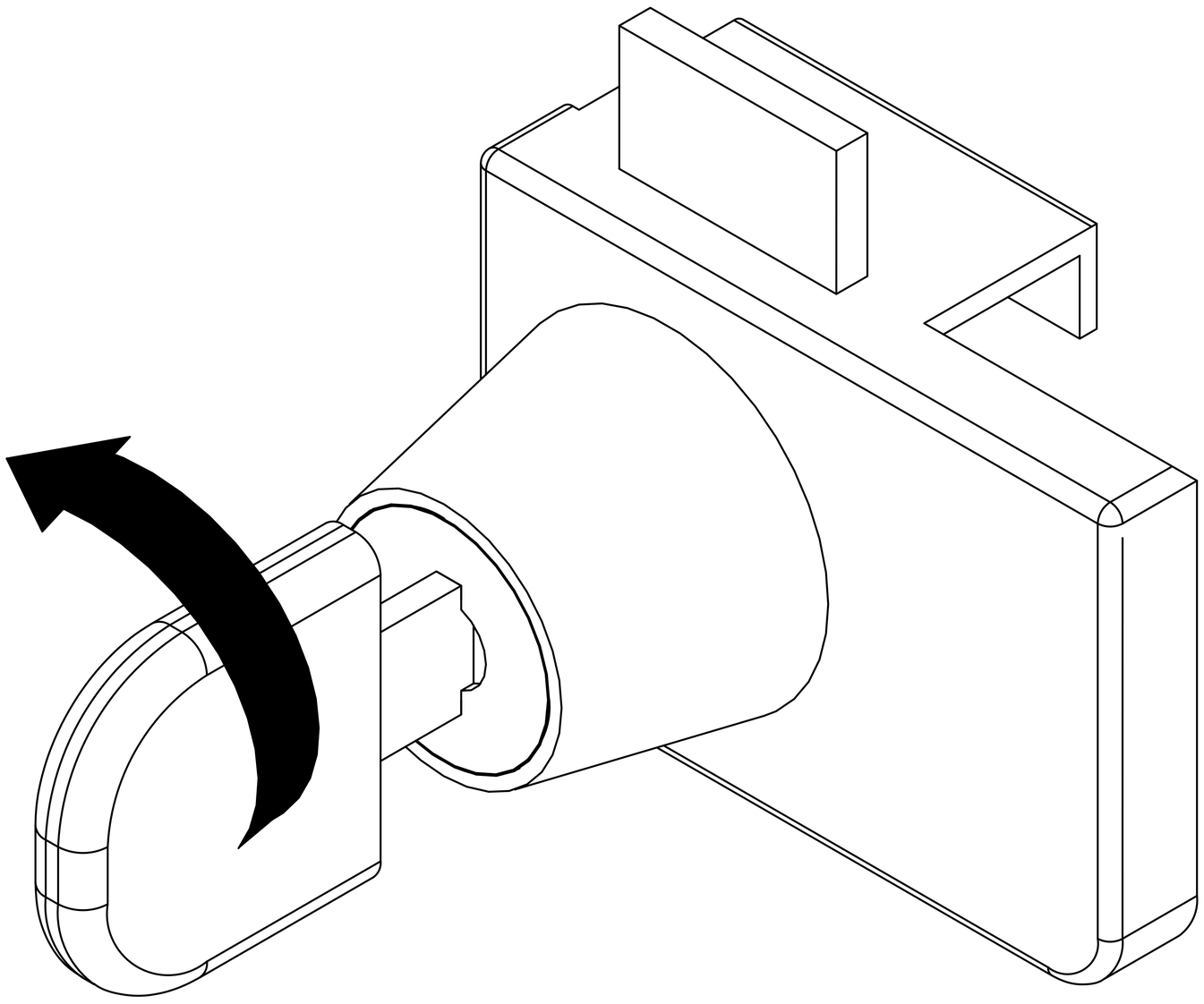

Tip: Turning the door lock to the left opens it

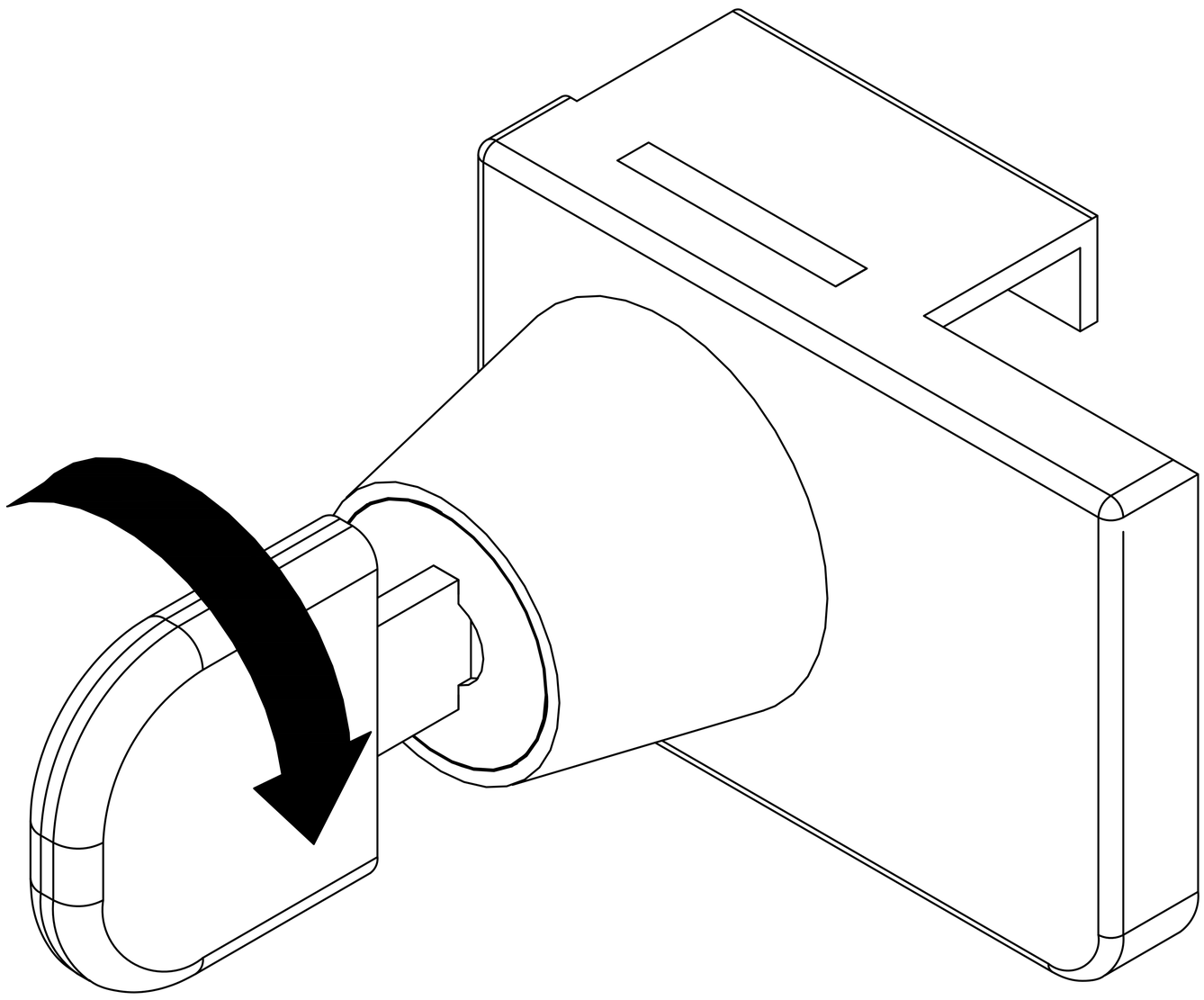

Step 41

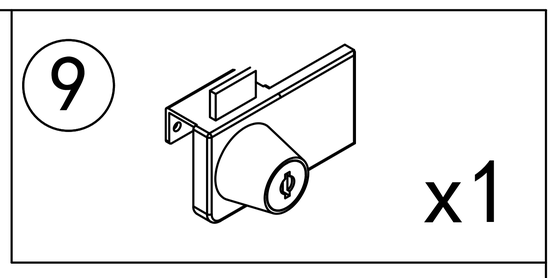

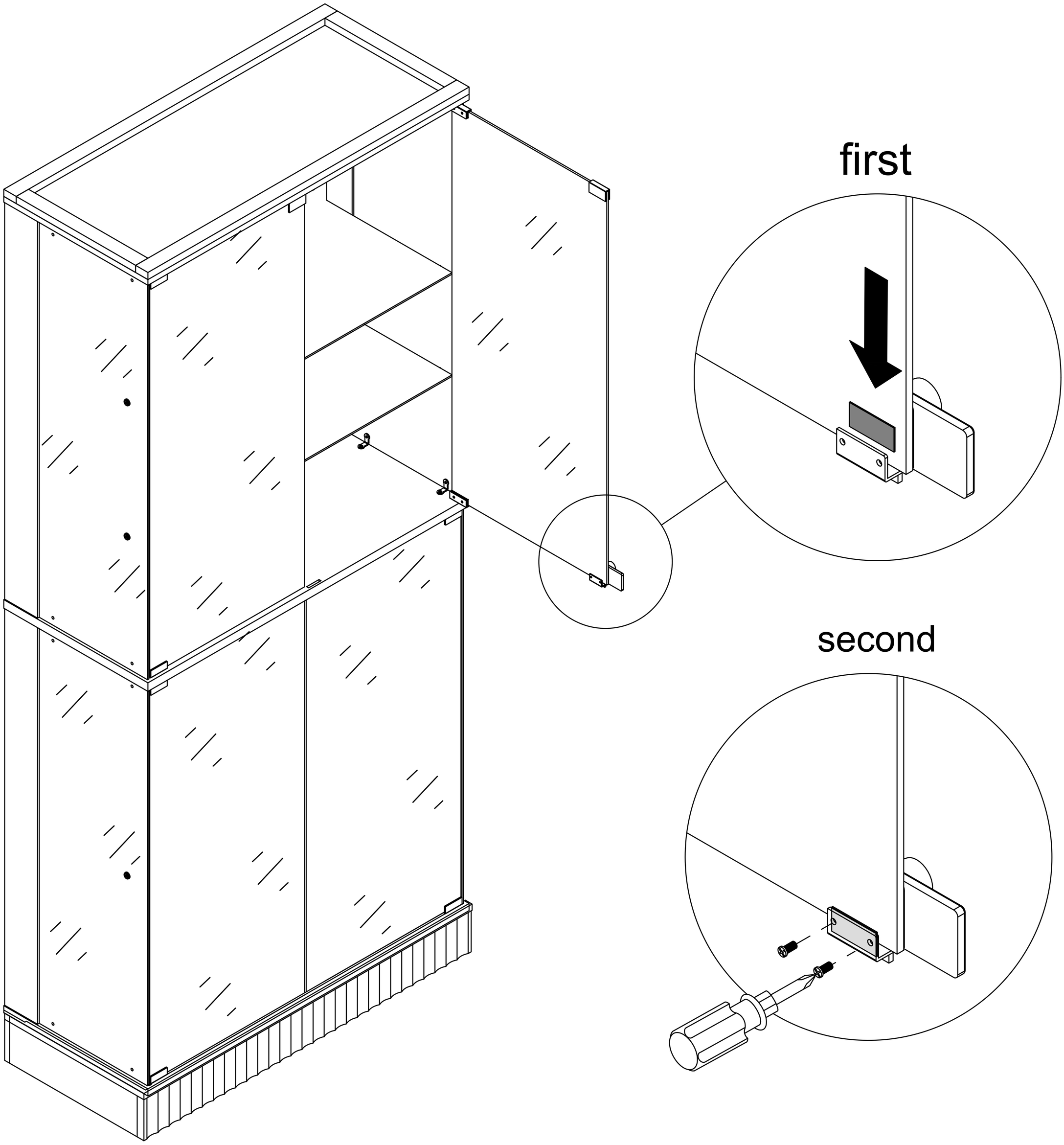

Step 42

Open the glass door

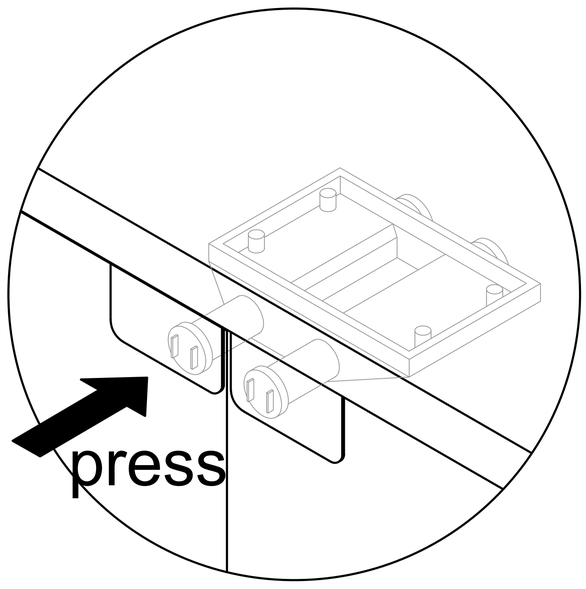

Close the glass door

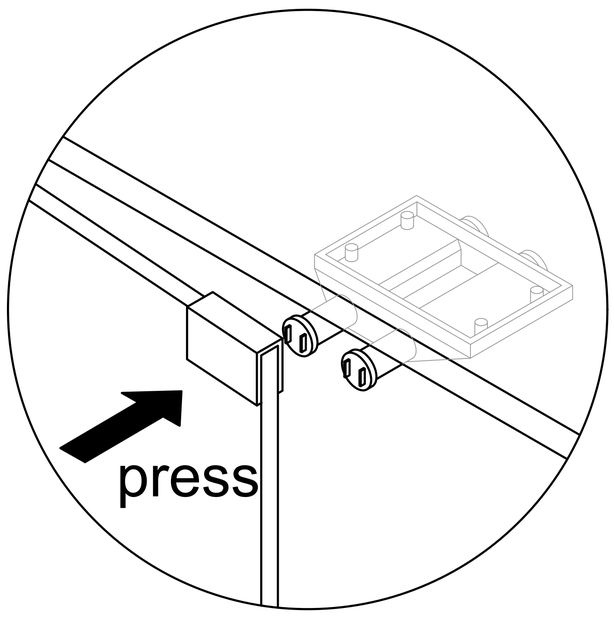

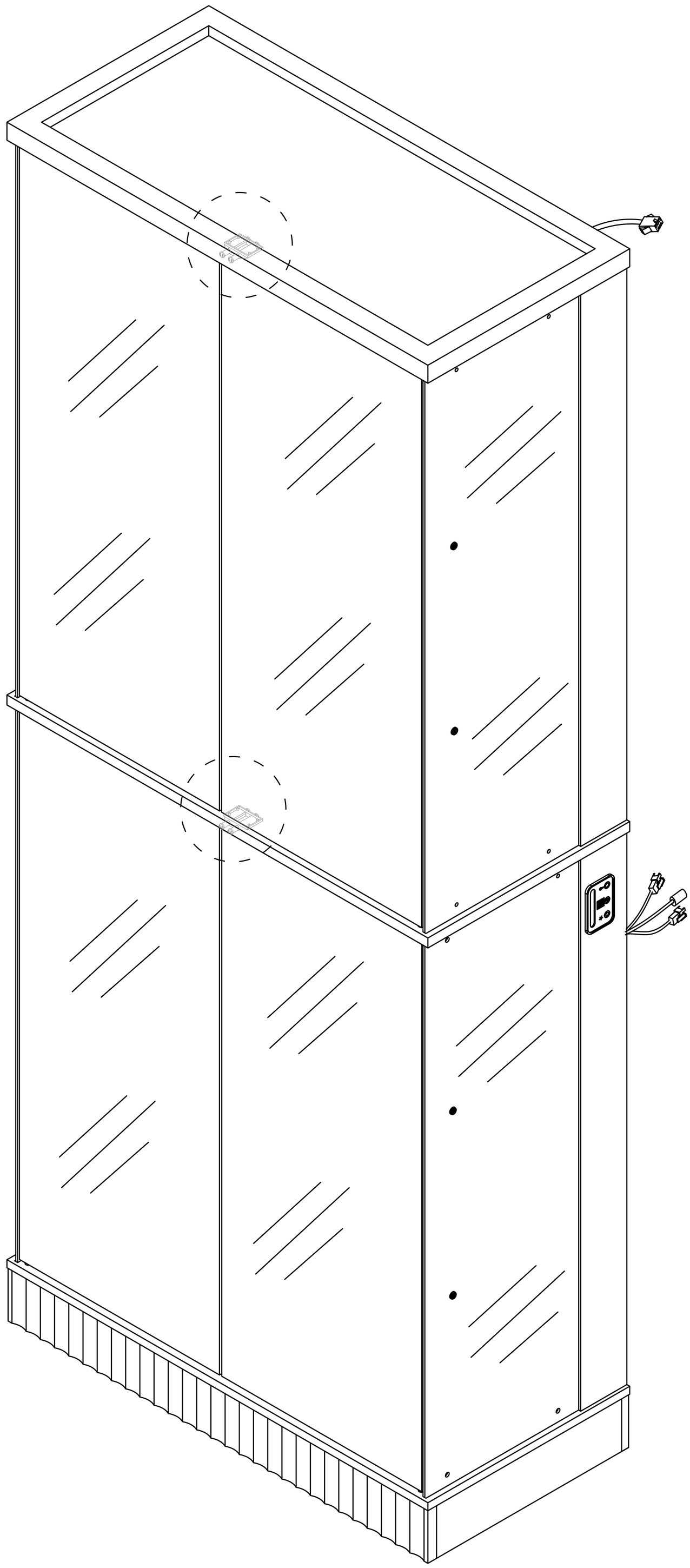

Step 43

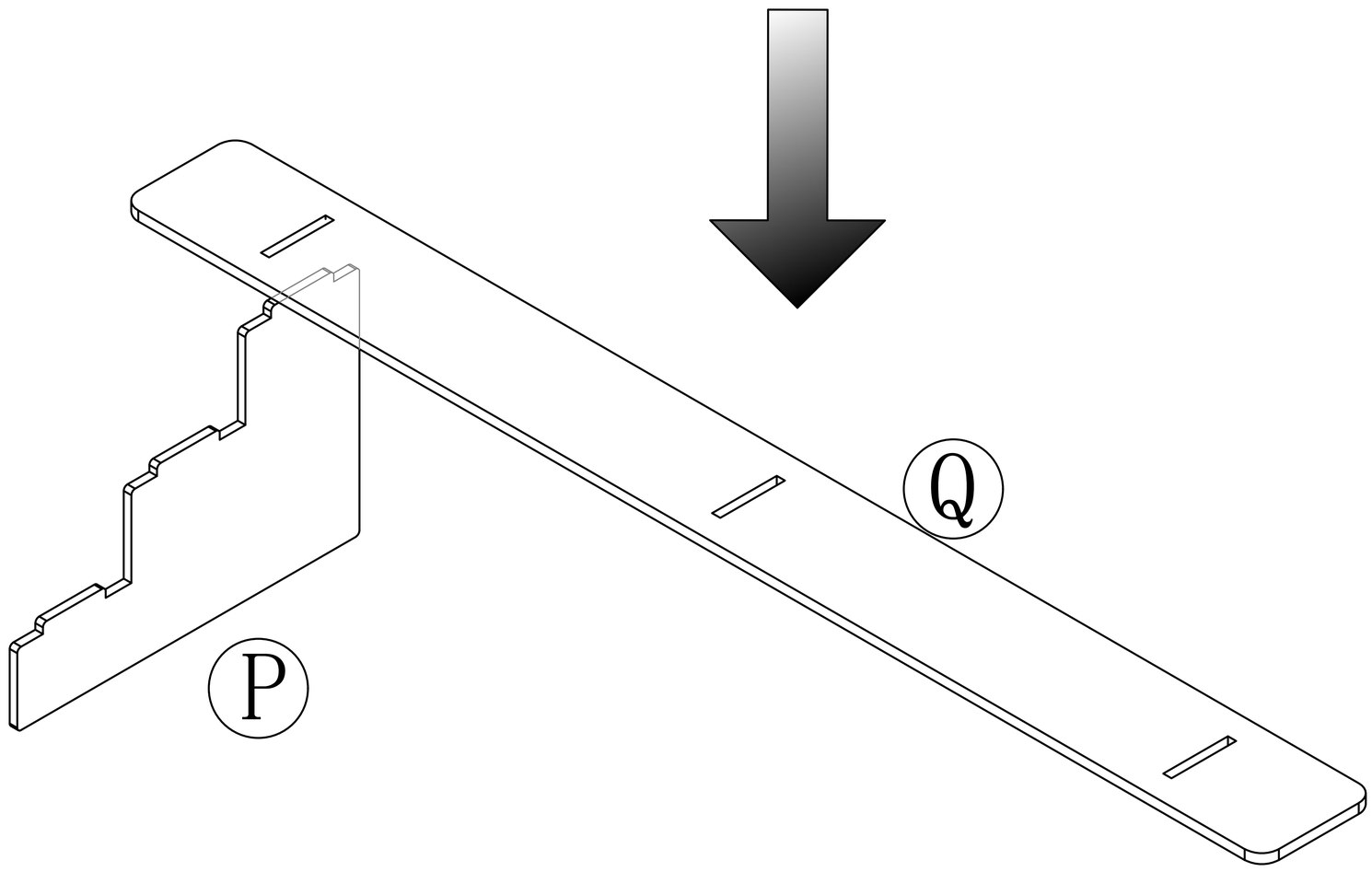

Step 44

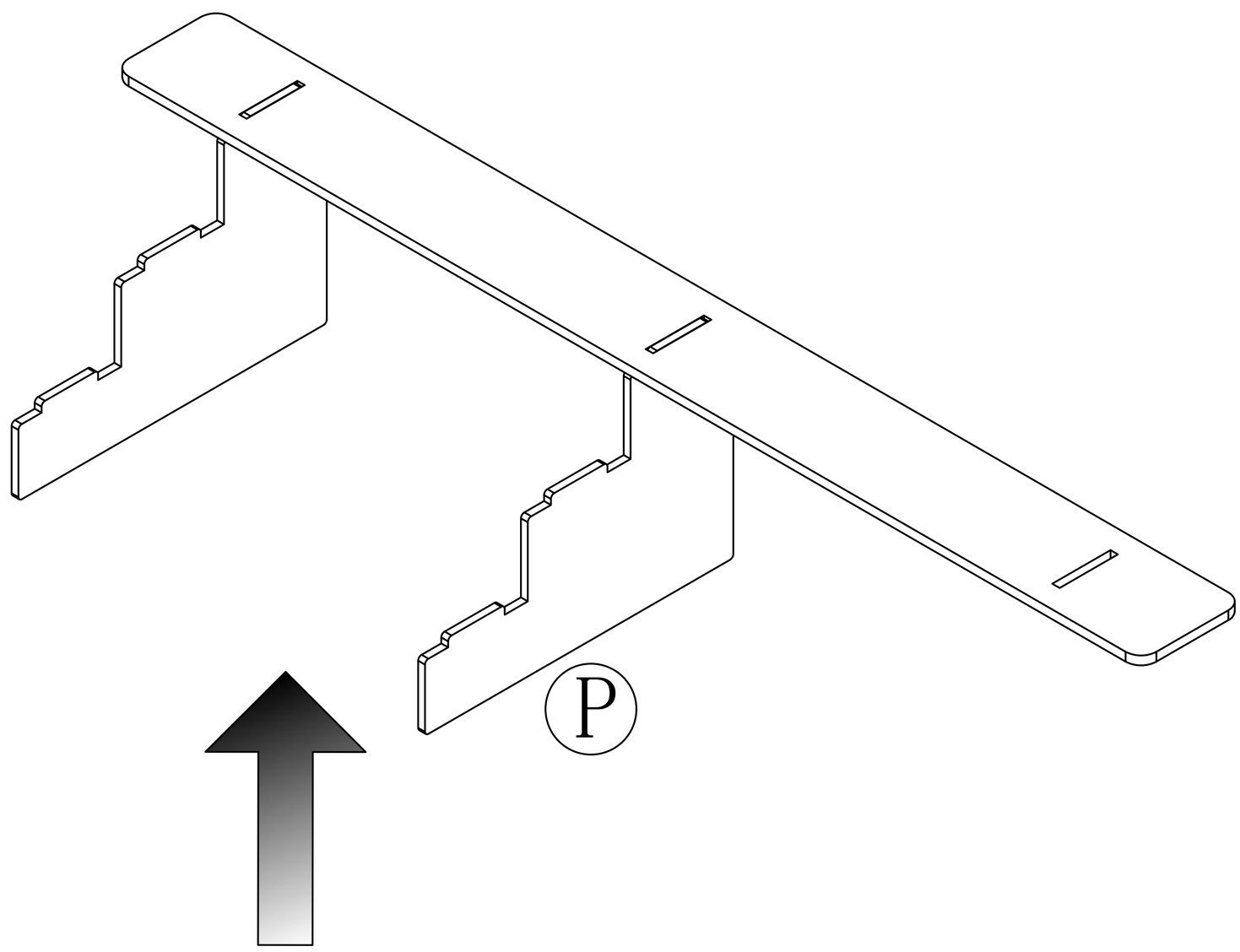

Step 45

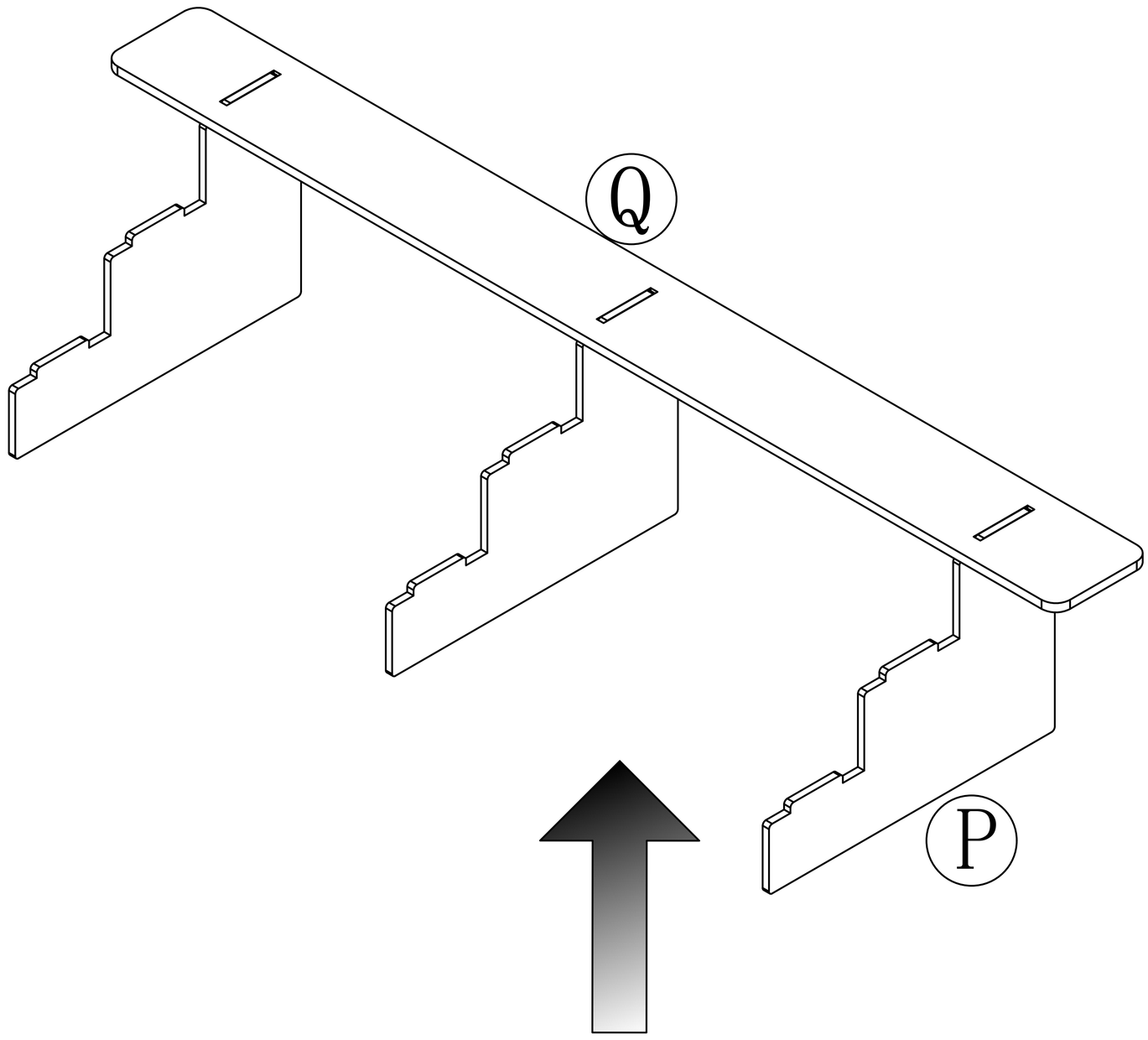

Step 46

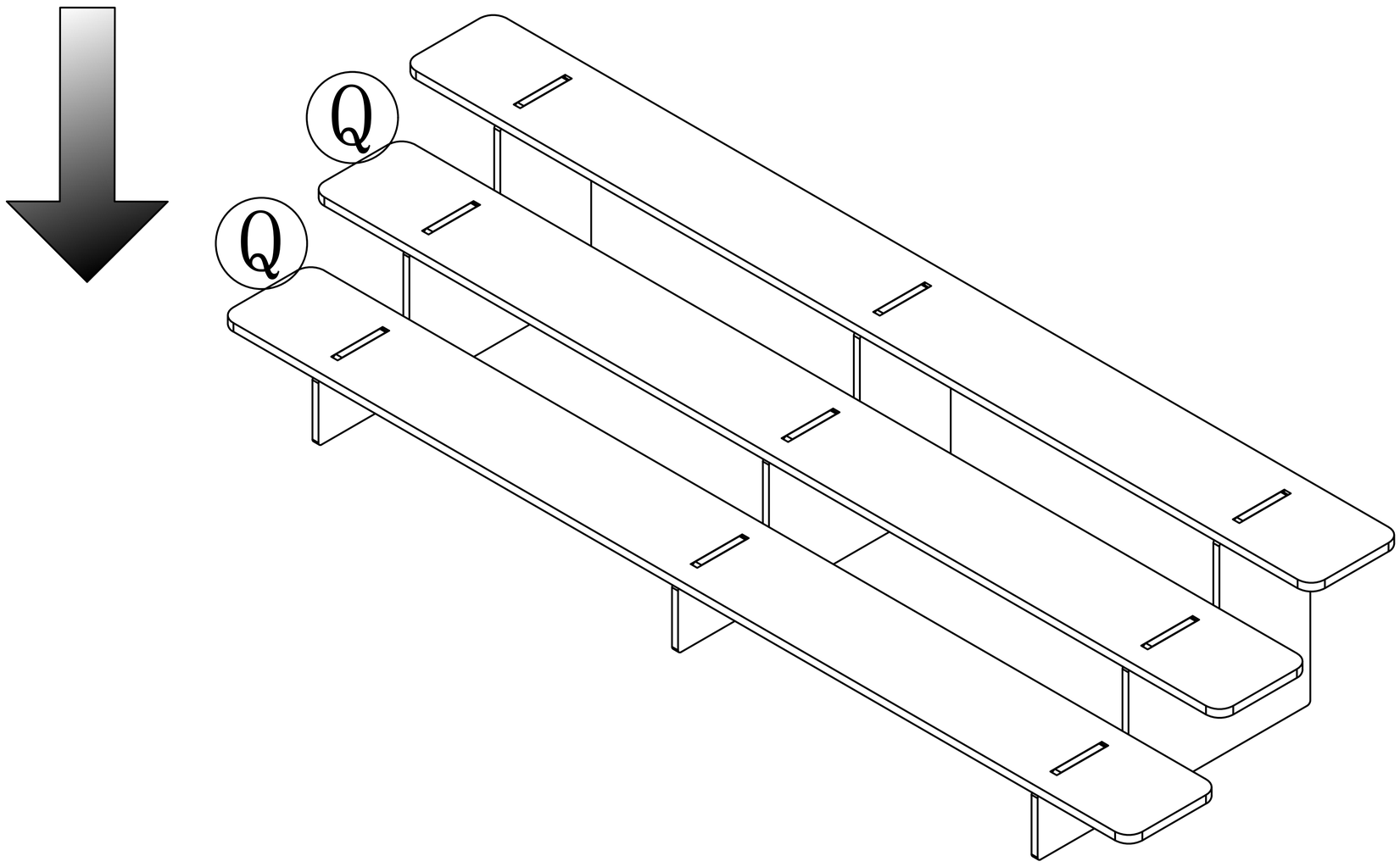

Step 47

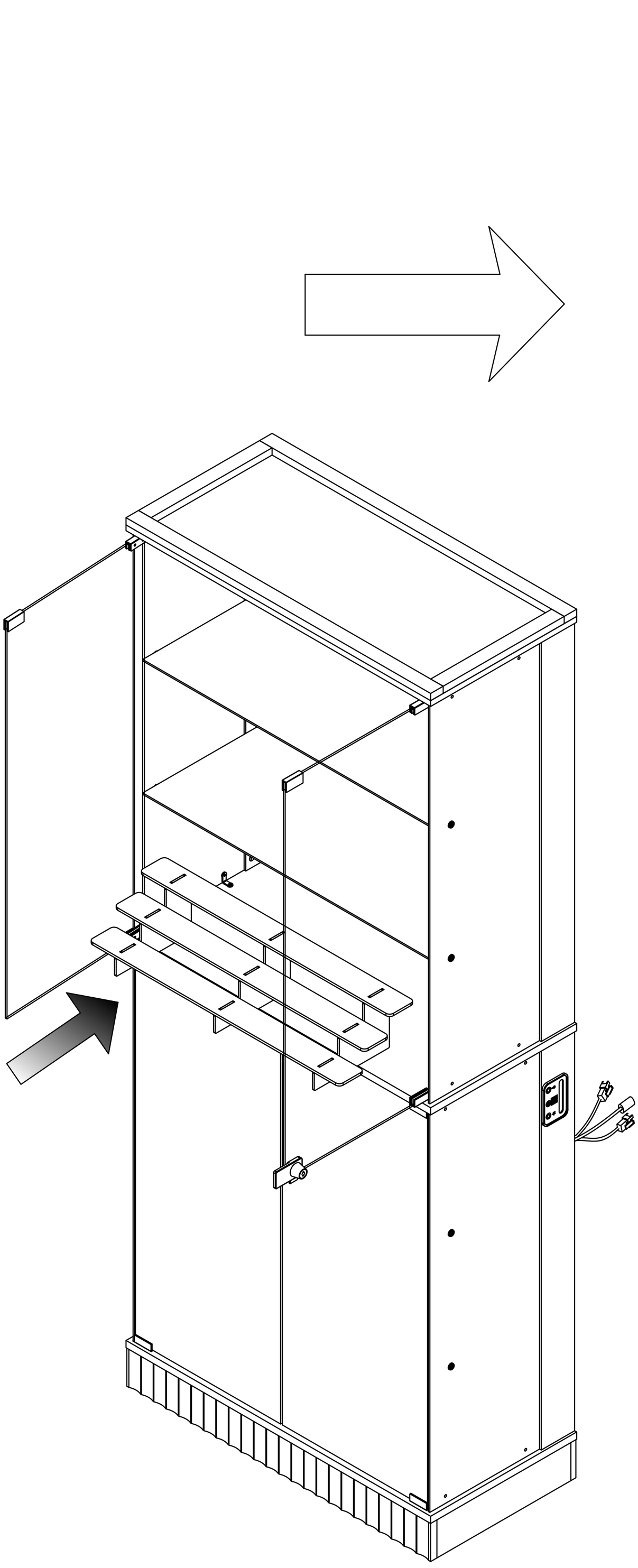

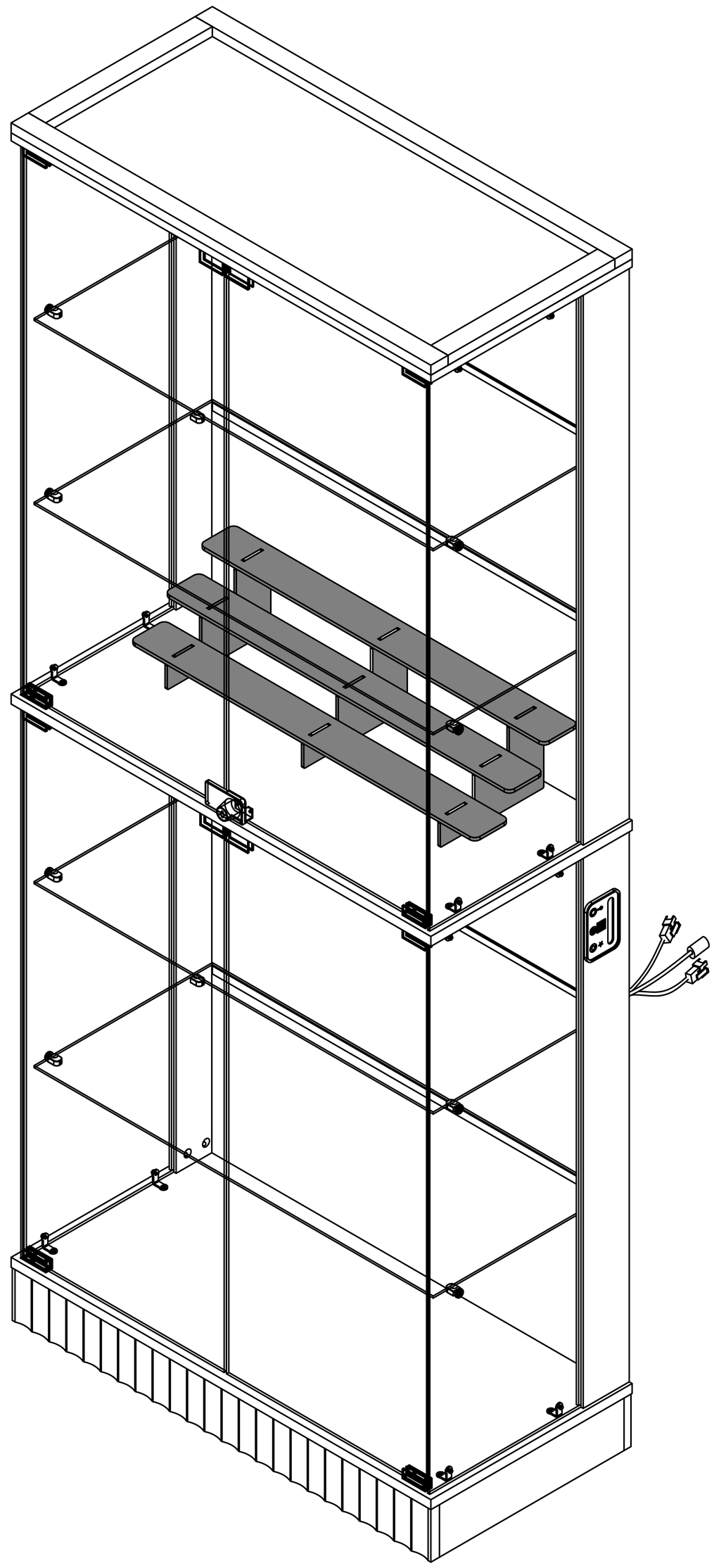

Step 48

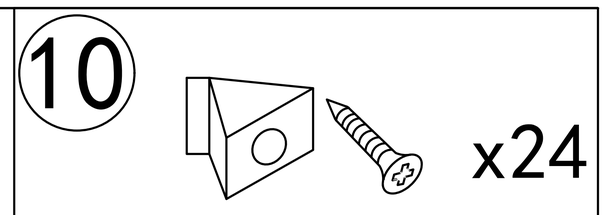

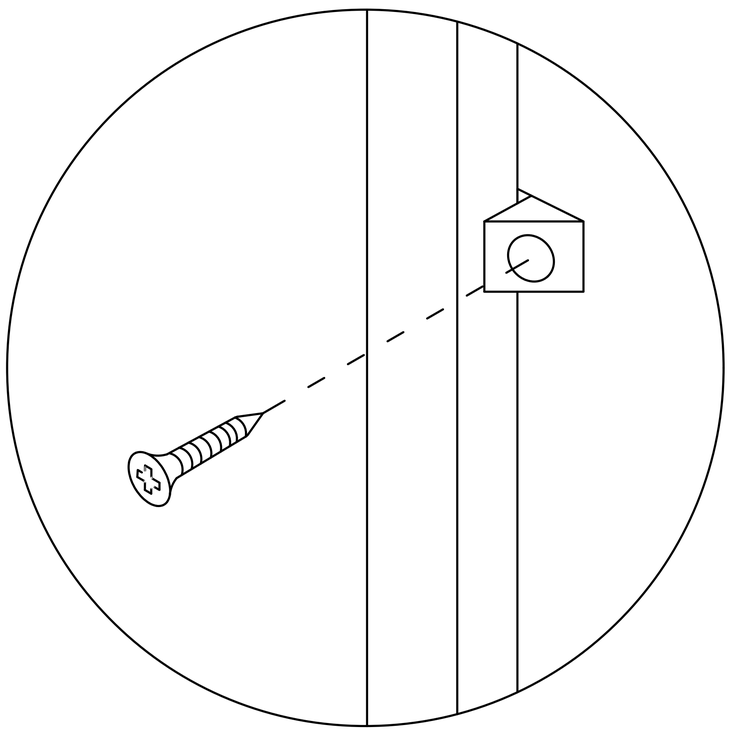

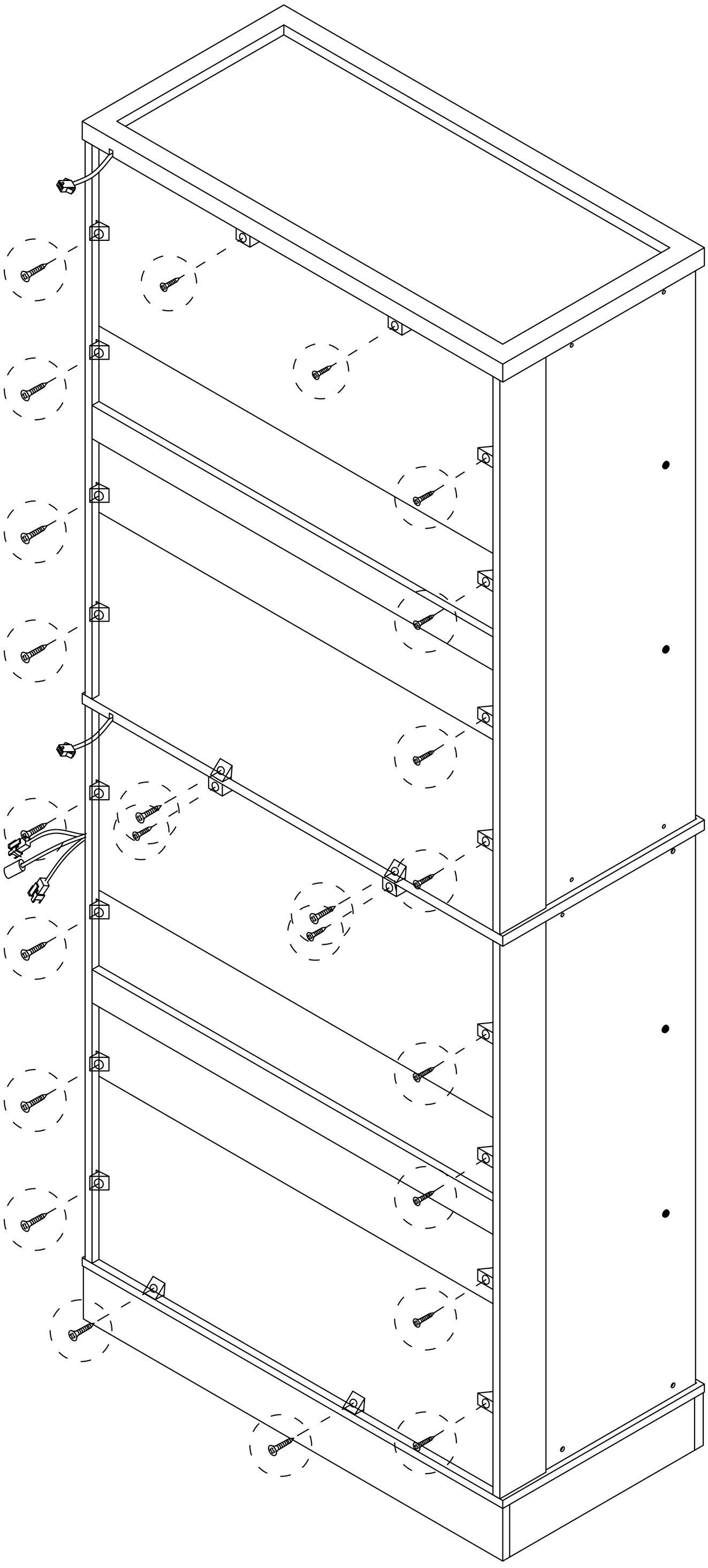

Step 49

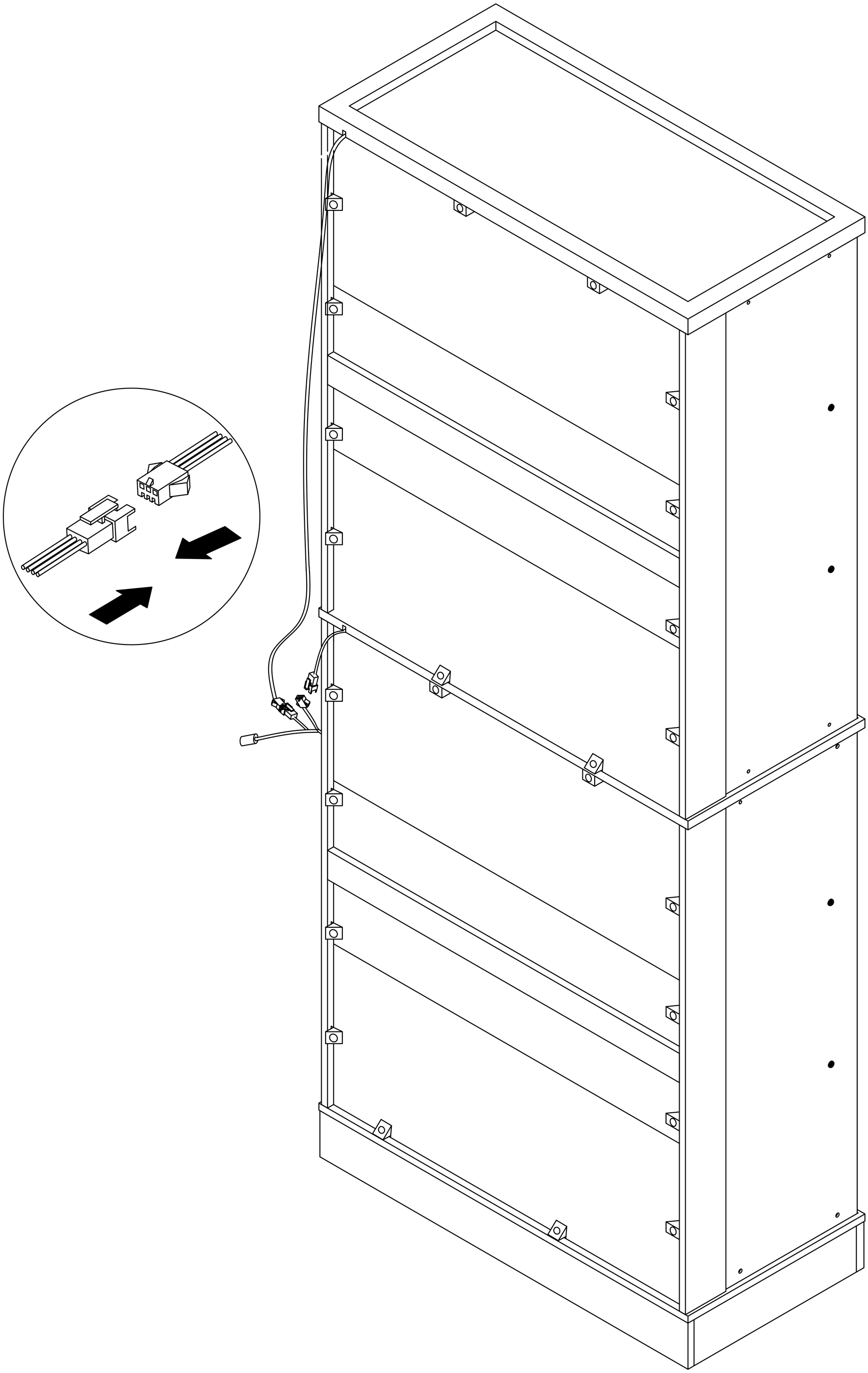

Step 50

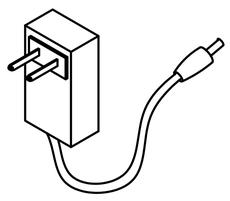

x1

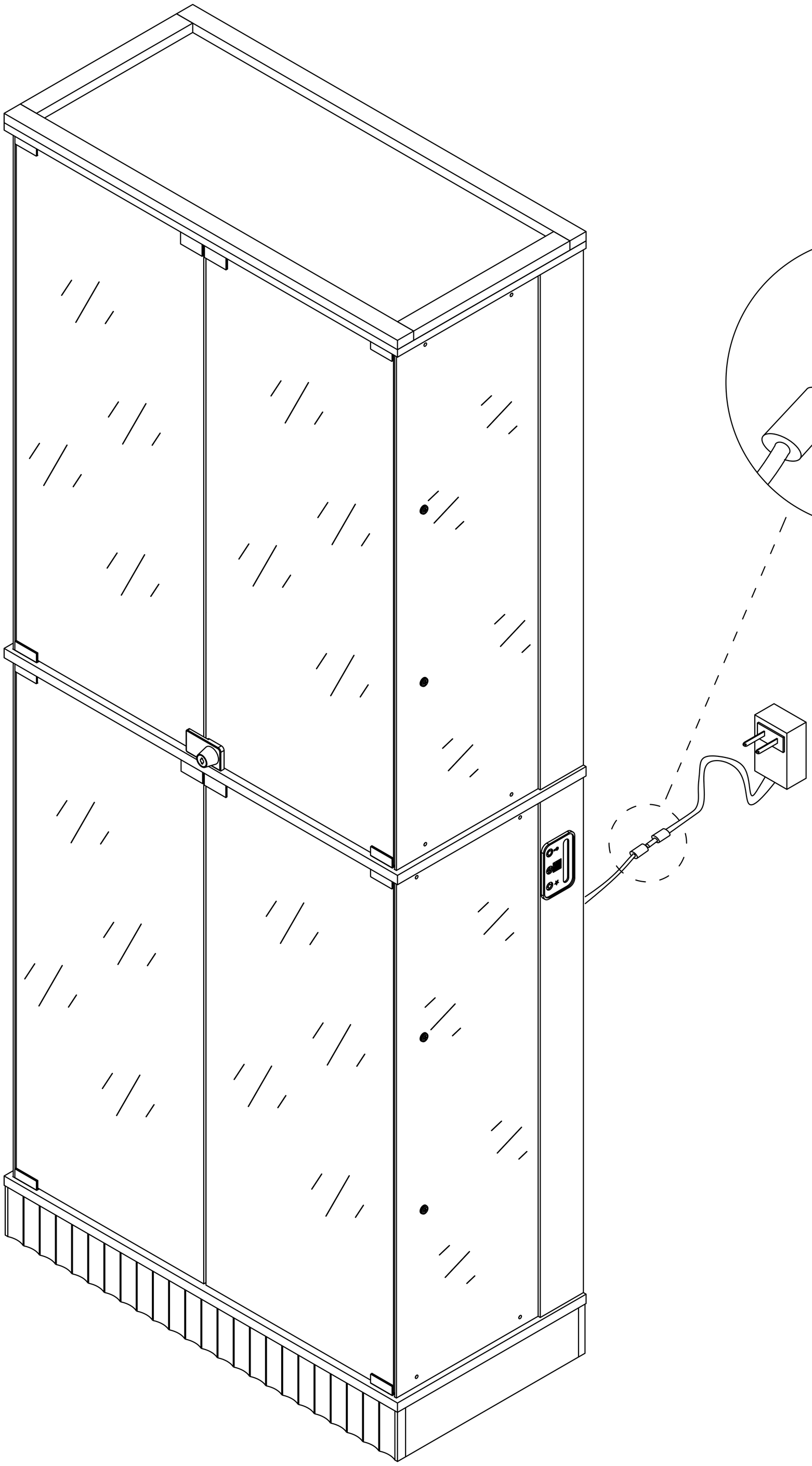

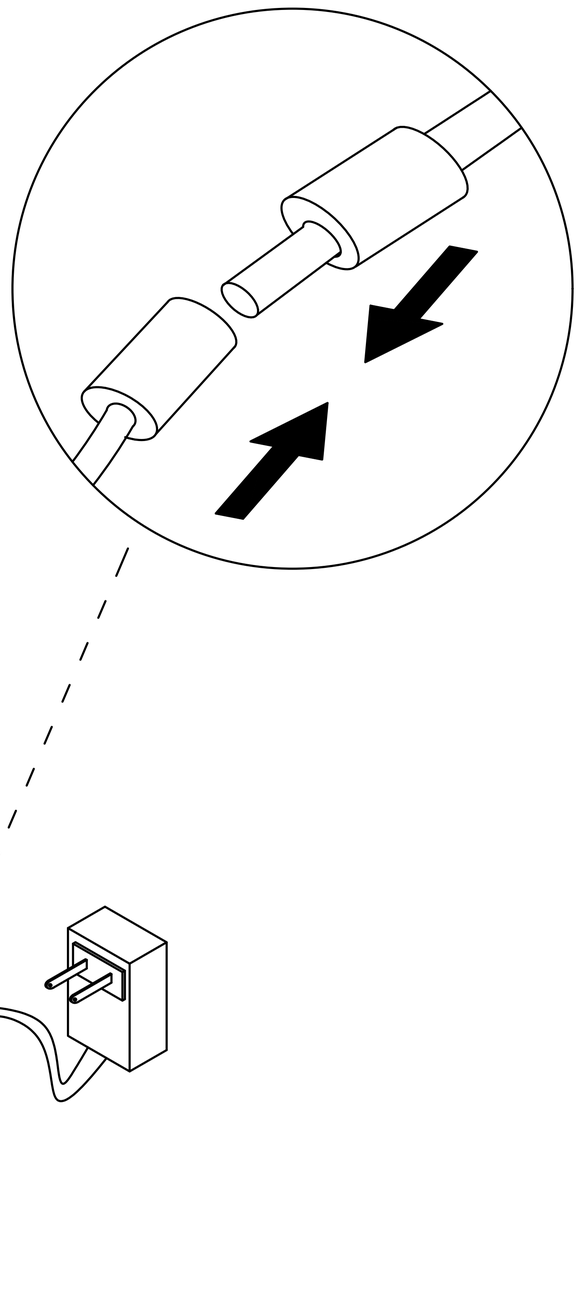

Step 51

Install as required

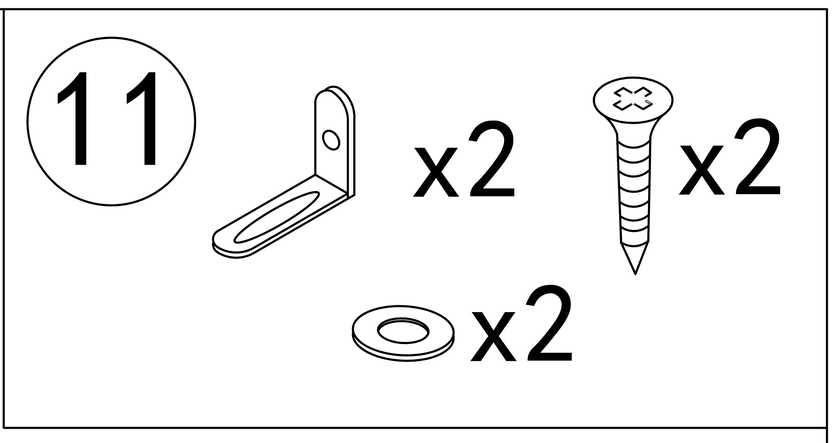

3.5x14mm

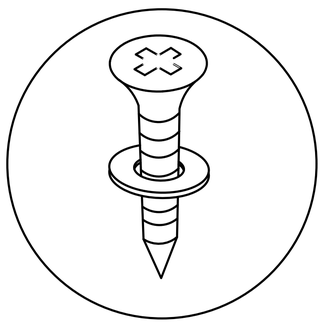

Install the anti fall hardware on the cabinet as shown in the picture first

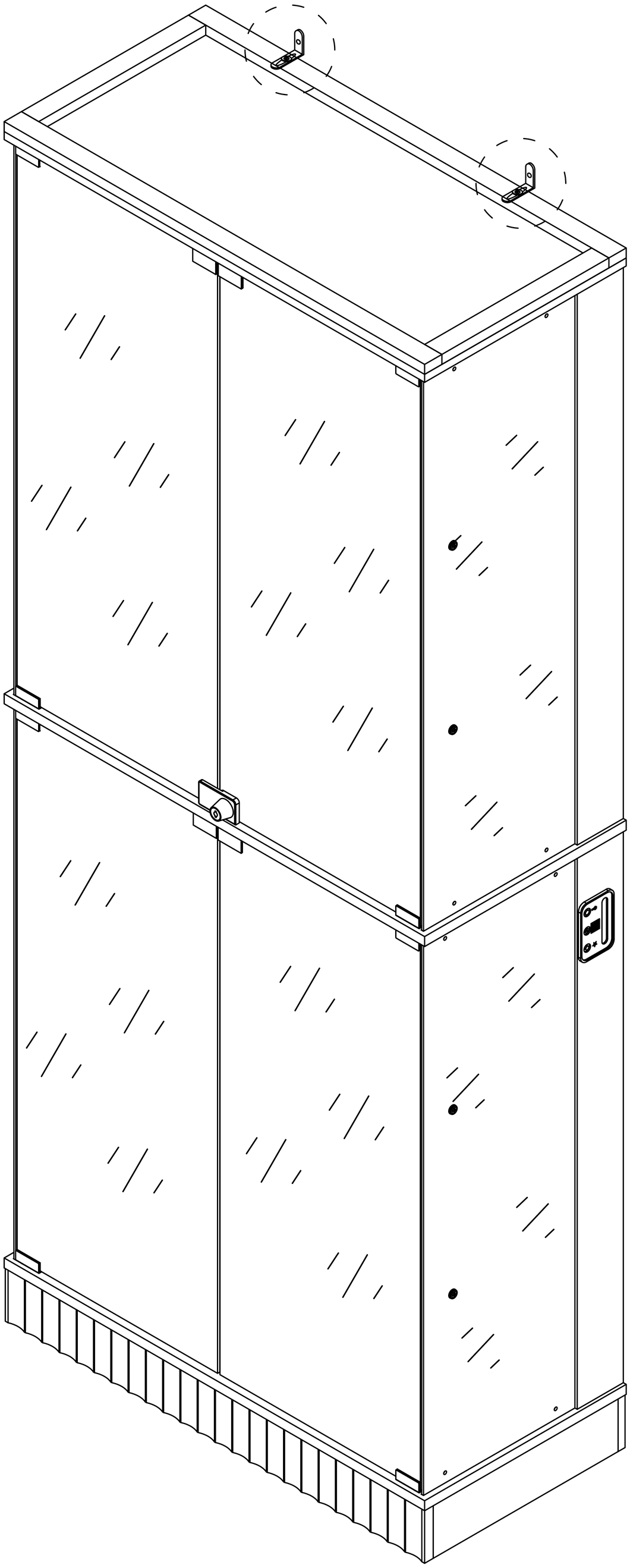

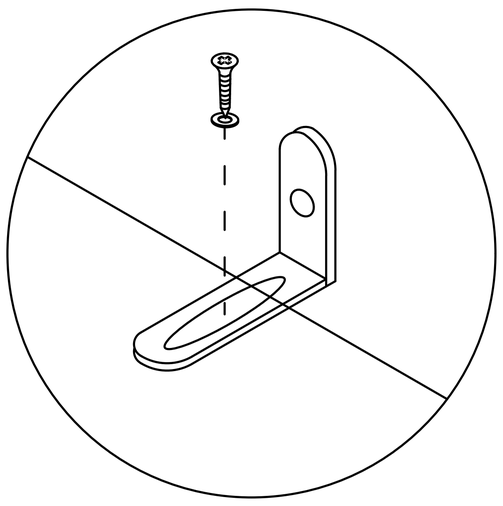

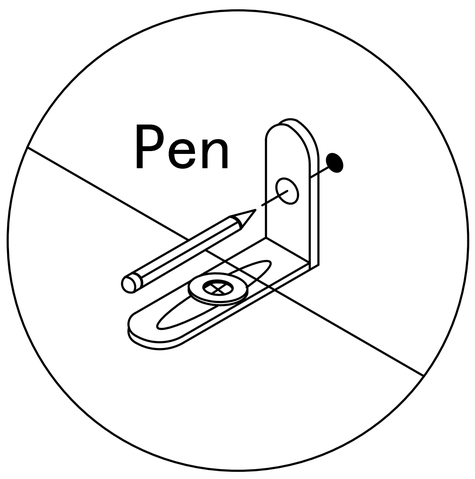

Then mark the wall with a pen through the holes in the anti-fall hardware

Step 52

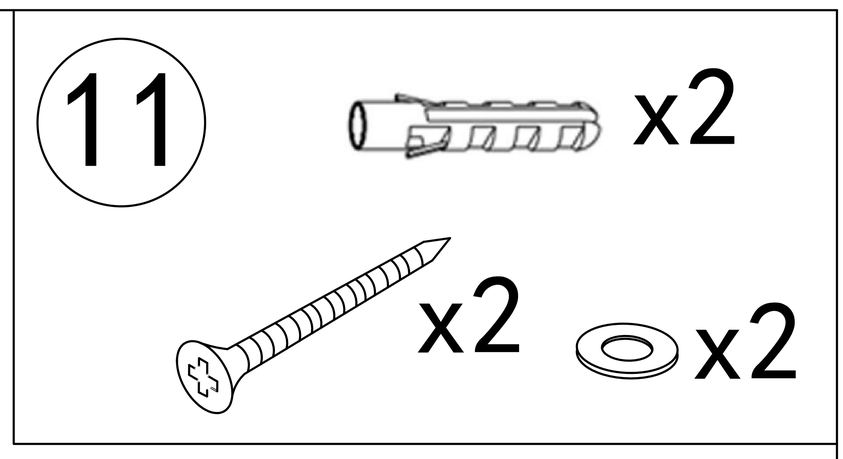

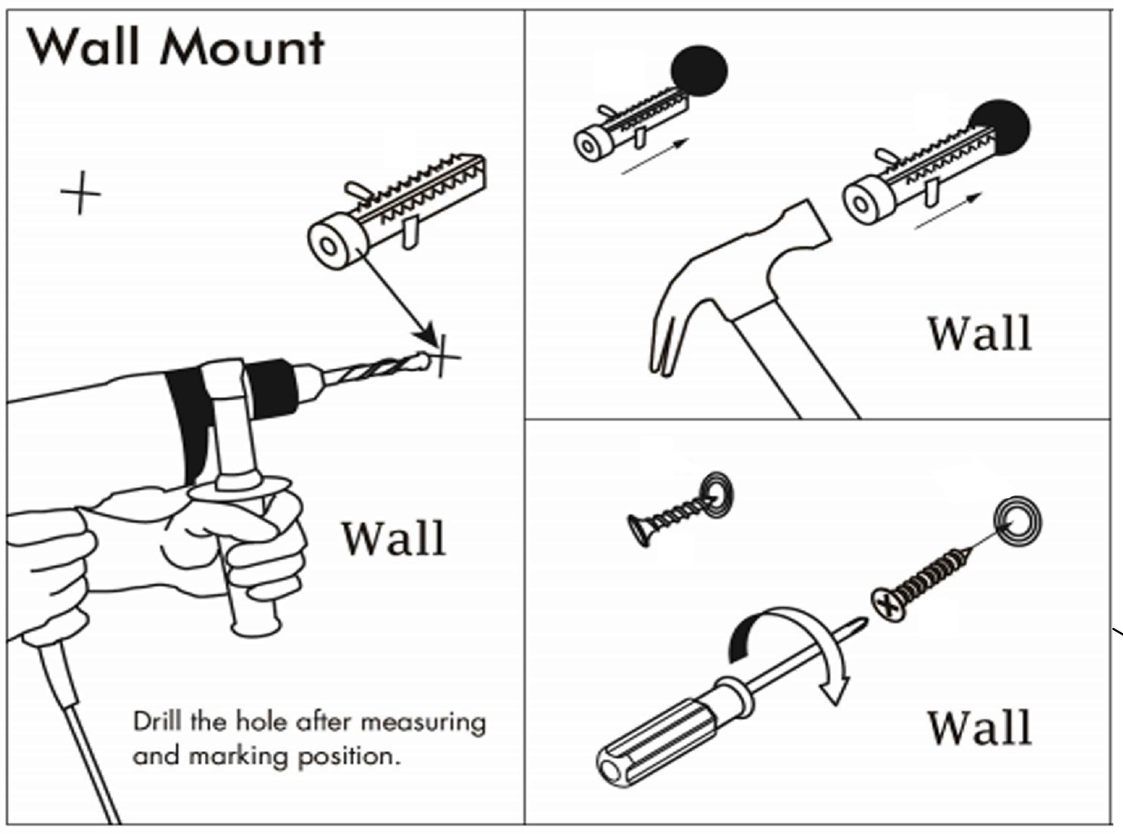

Drill the hole with an electric drill and punch in the colloidal particles

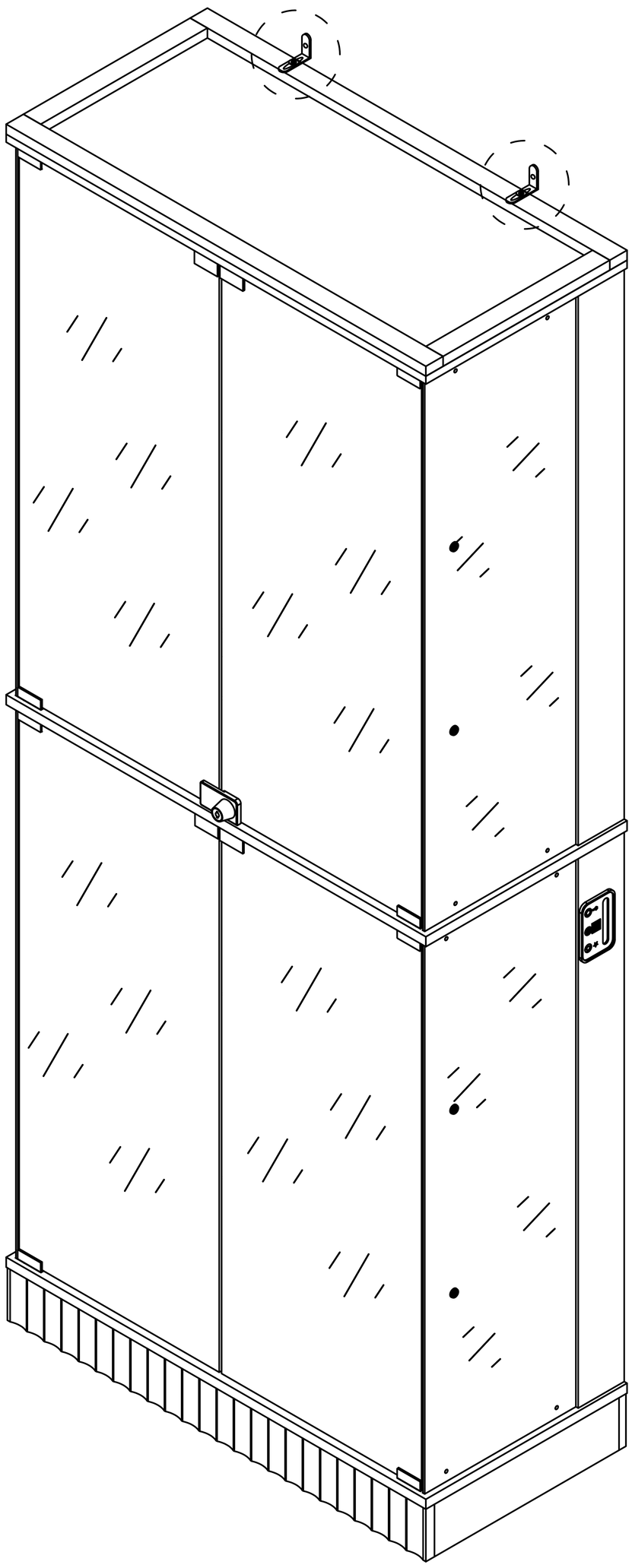

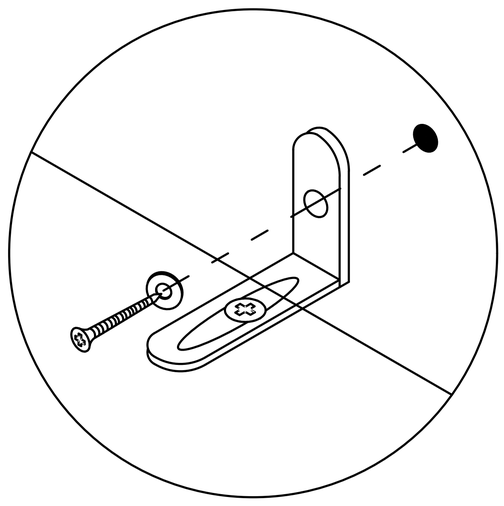

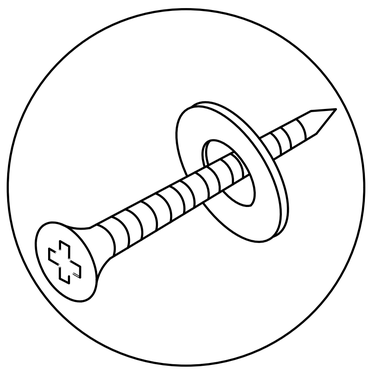

4x45mm

Fix the dressing table to the wall

Smart Box Plug Power Off

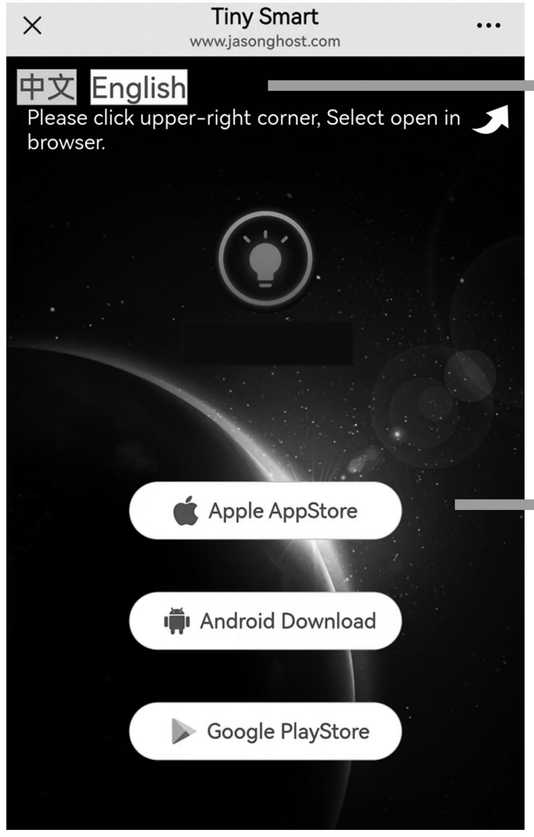

Select English Language

Select the corresponding device to download.
Note: If the download fails,
please turn off the "Enhanced Protection"
in the Pure Mode settings of the device.

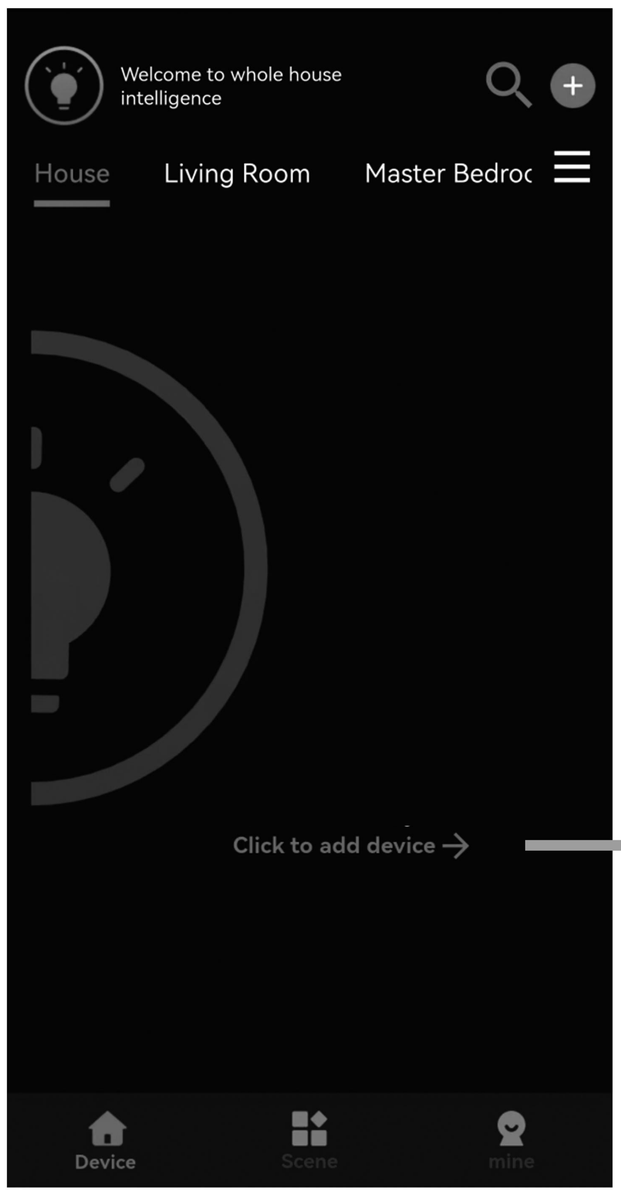

①

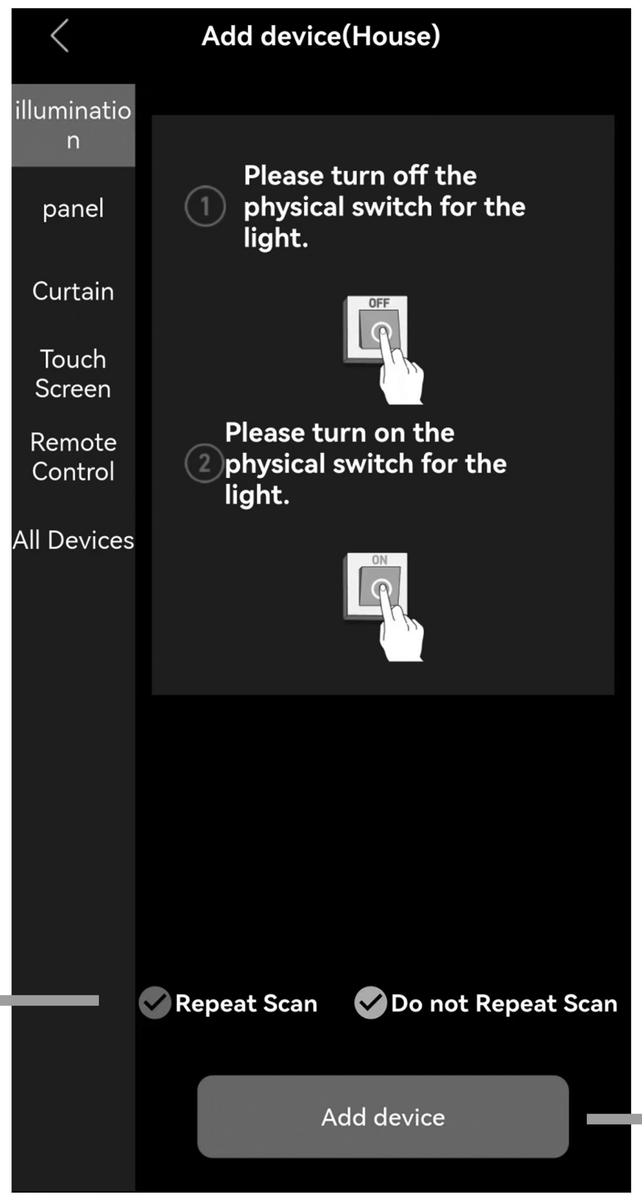

②

It turns blue after clicking

③

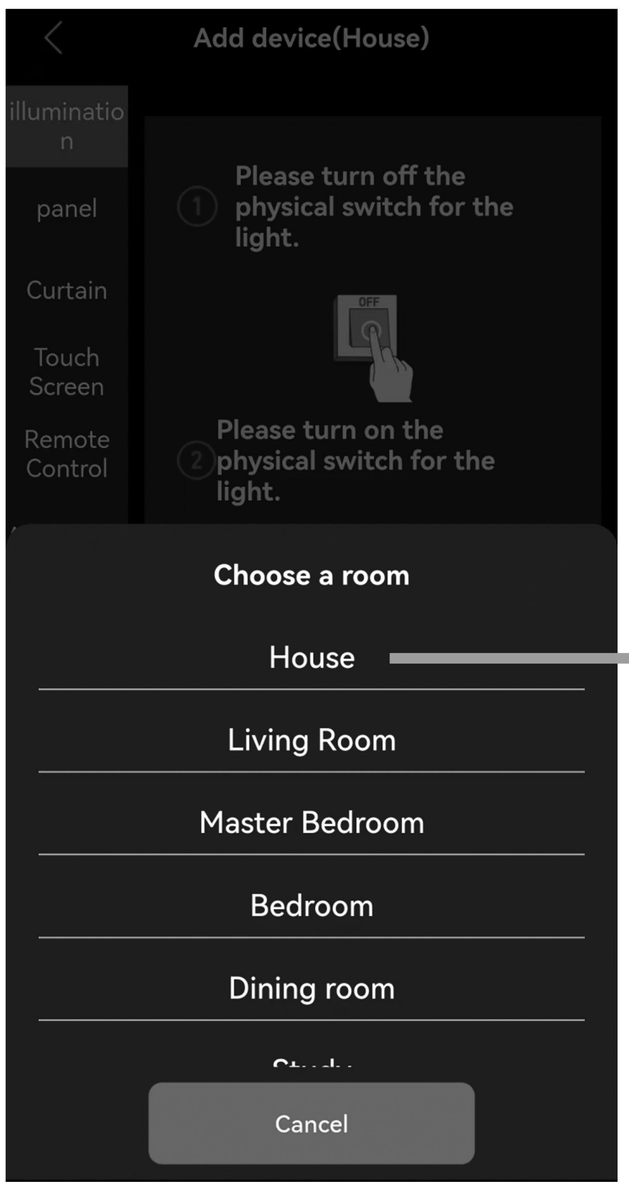

④

⑤ Unplug the smart box

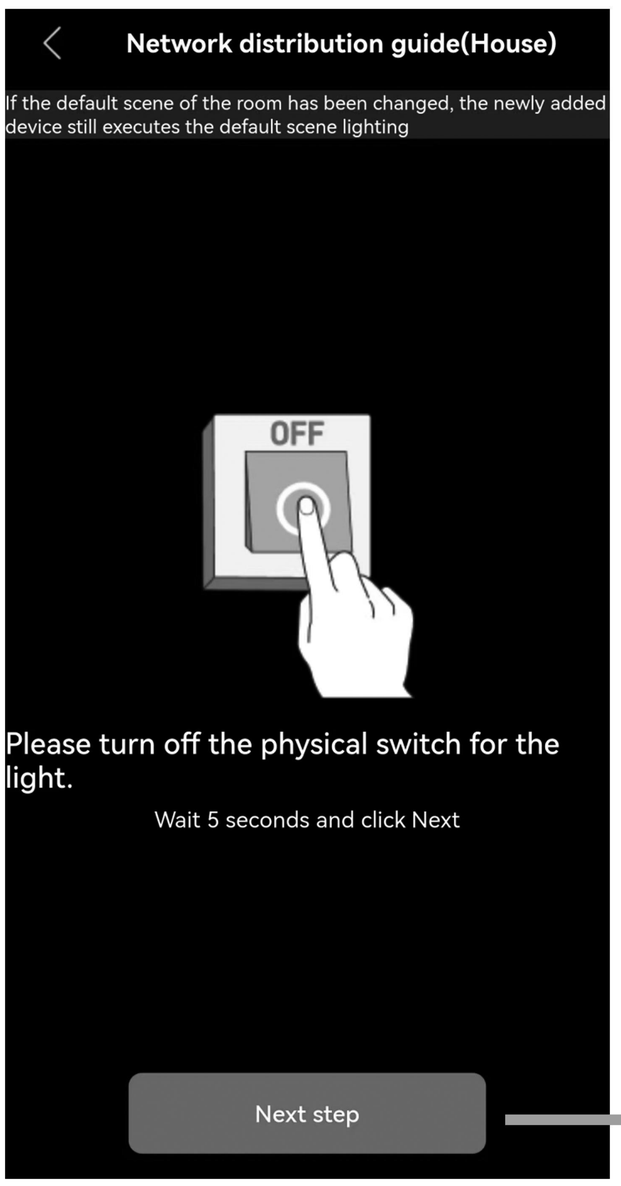

⑥

⑦ Plug in the smart box power plug.

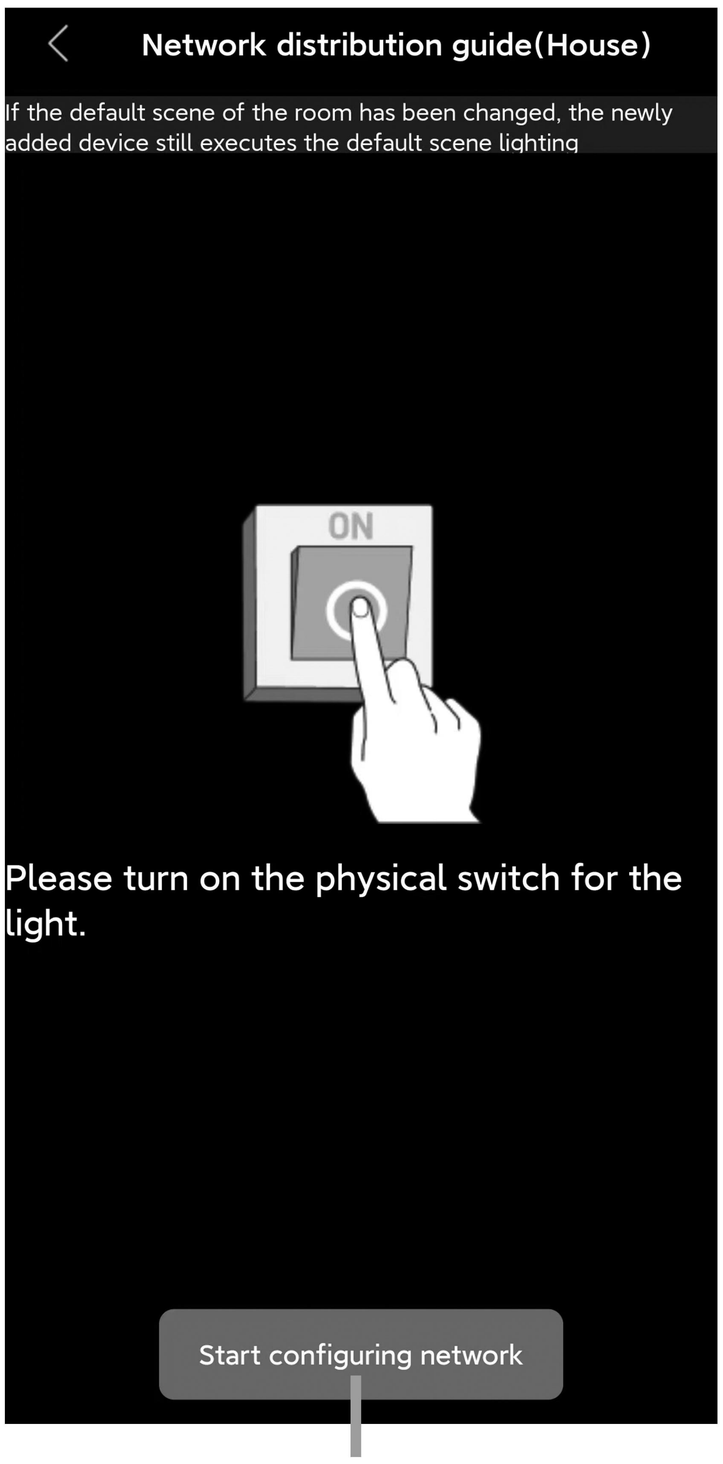

⑧

The appearance of this program icon indicates that the matching is complete

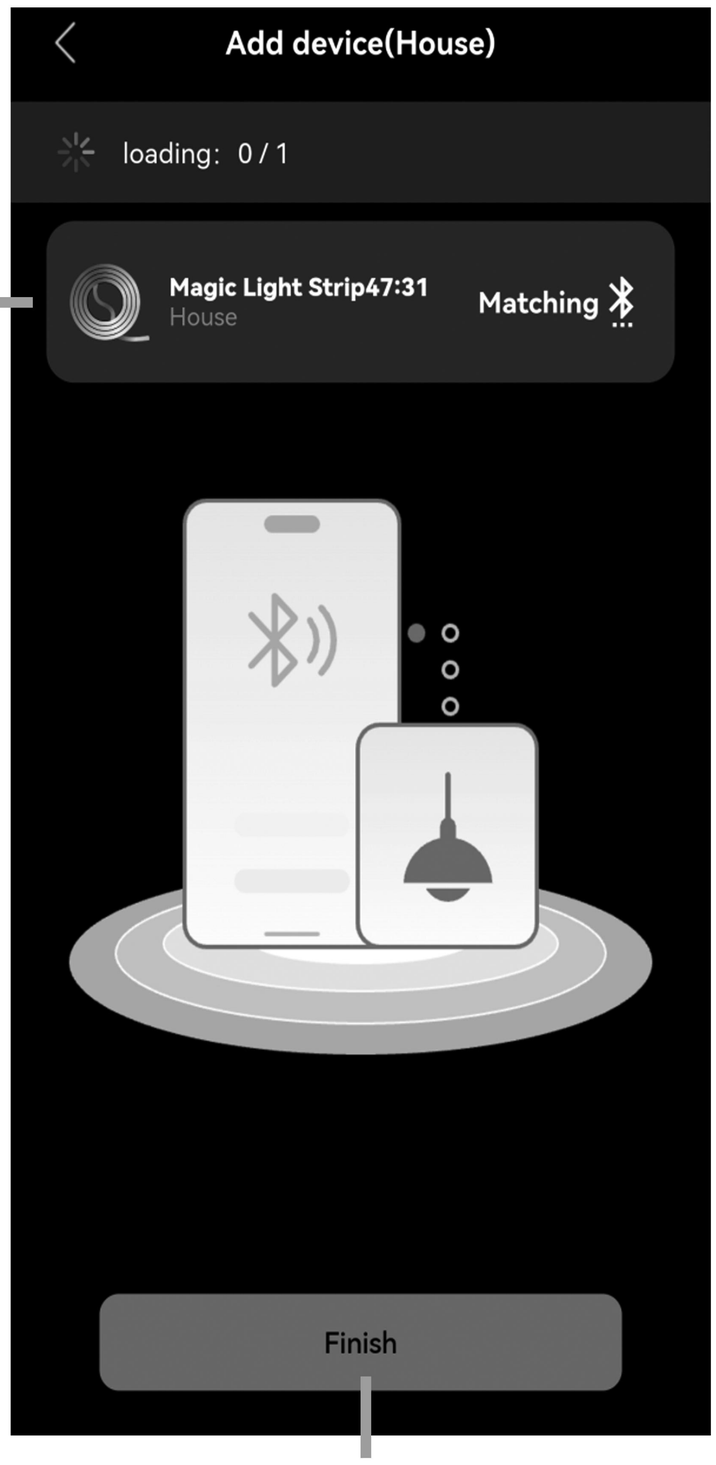

⑨

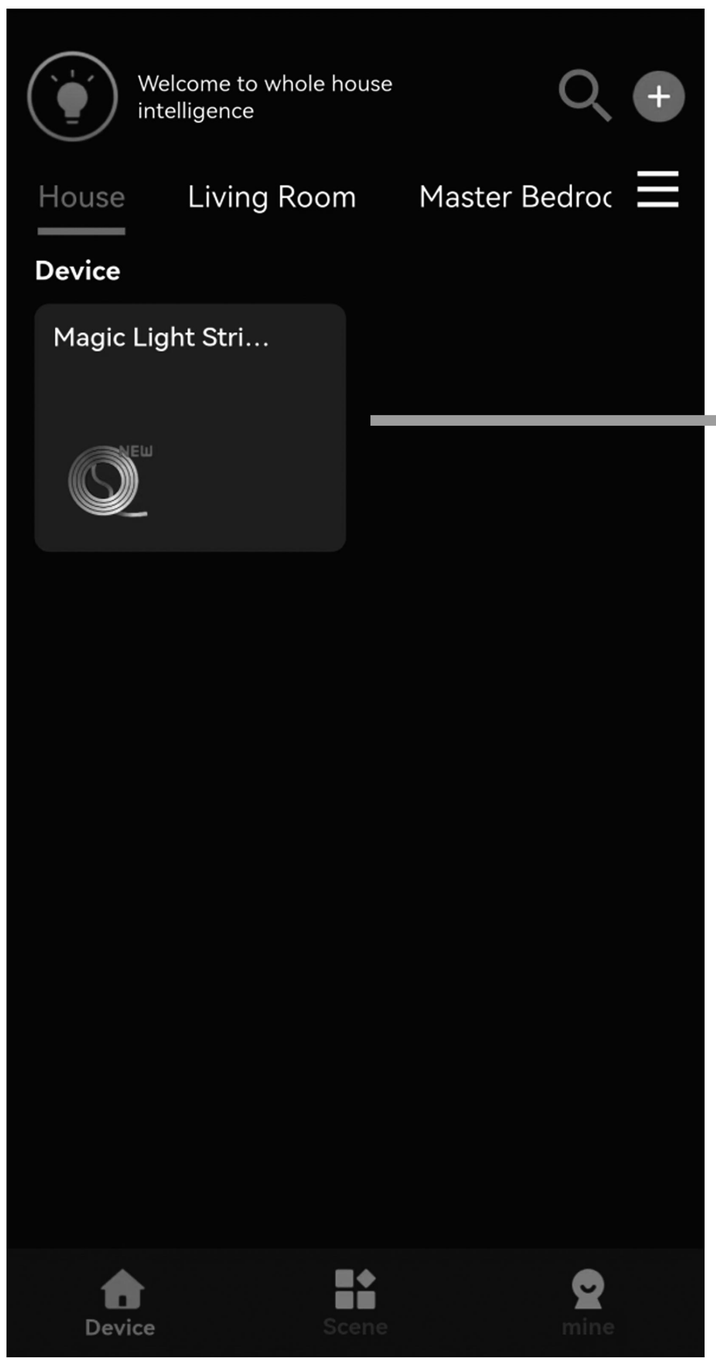

⑩

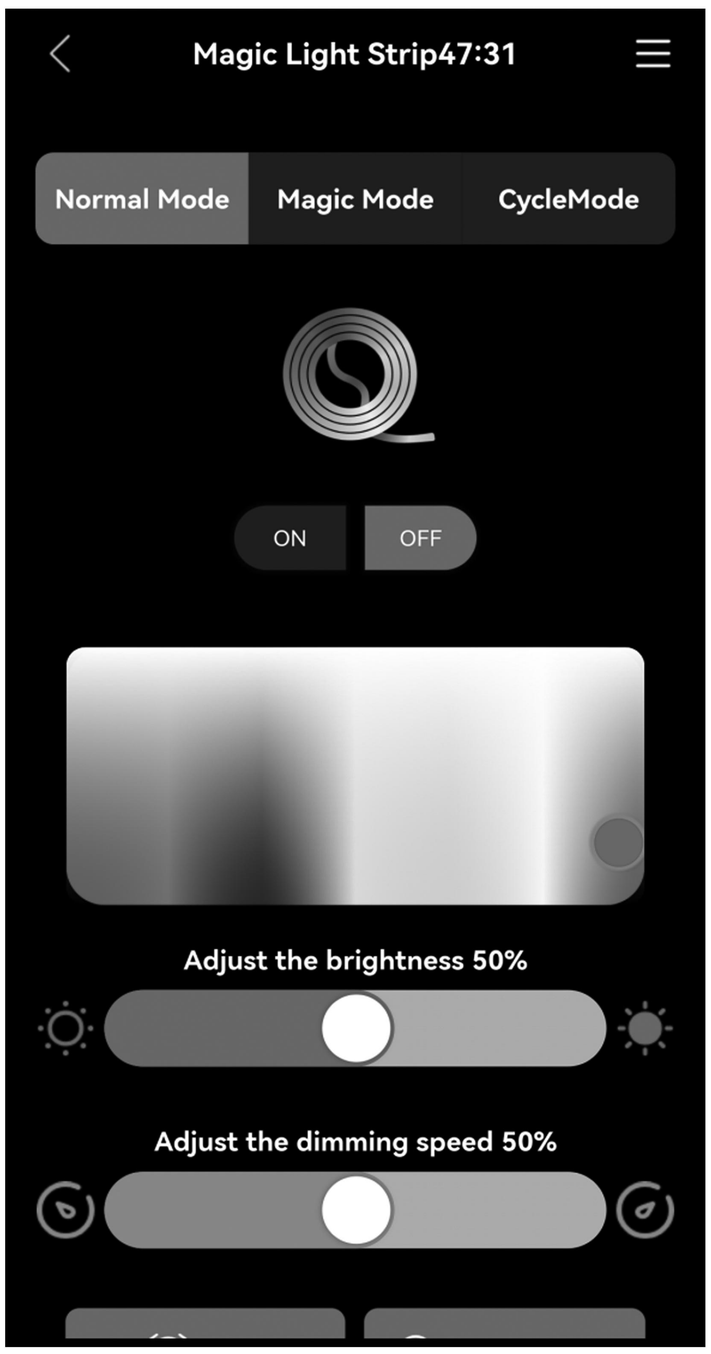

Now you can freely adjust the lighting according to your preferences

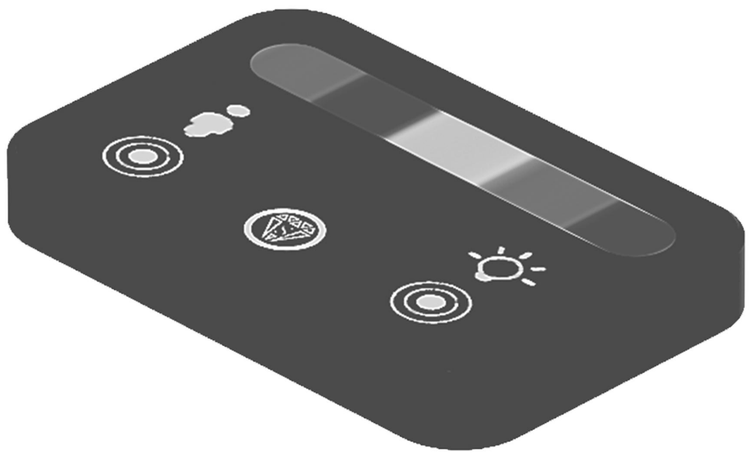

User's Guide

Thank you for purchasing this product.

To use this product, please plug it into a 12V DC power supply.

Please use if the product works normally after connecting to power.

Introduction

The box is an intelligent controller. With 4 touch buttons,

it can turn ON/OFF the light and turn ON/OFF the induction function,

change light colors, and adjust the light luminance.

The lights can be controlled through both the touch buttons and a dedicated app.

Operation

This touch button is used to turn the light on/off, adjust brightness, and switch the color of the lights.

i. Single Click: Turn the light on/off.

ii. Quick Double-Click: Switch between 7 static RGB colors.

iii. Long Press (2+ seconds): Adjust the light luminance.

This touch button is used to turn on/off the induction function.

A.touch this button once to turn on the induction function (indicator light on).

After the person leaves or remains stationary for more than 30 seconds, the light strip goes out; people and objects within a range of 1 meters move will light up the light strip.

B. Long press this button for 0.5 seconds to turn off the human body induction function(the indicator light goes out).

At this point, Keep the light strip as it was before turning off and no longer be affected by humanand object activities.

By default, induction function is enabled when powered on.

This touch button is the Dynamic Phantom Color Mode, which includes 5 magical lighting effects.

Simply tap to cycle through the options.(Attention:This mode cannot adjust the brightness)

This area controls the color switching function.

You can tap or slide to any color bar position to change the color.

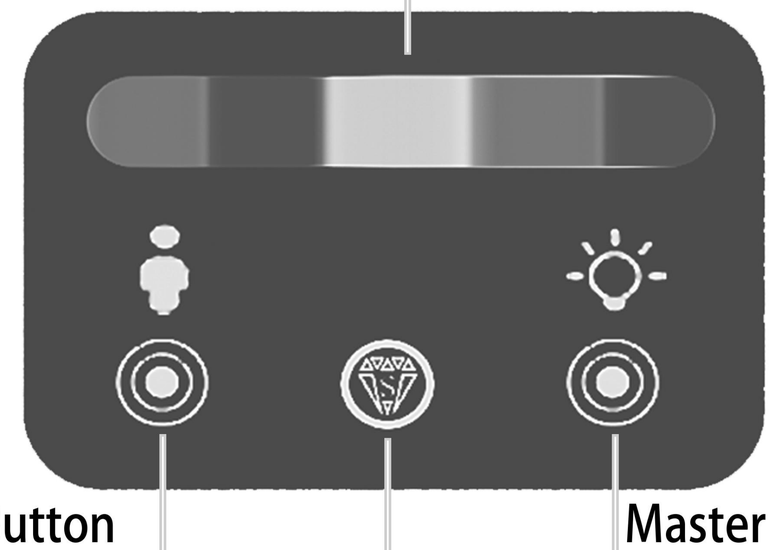

ATTENTION PLEASE

1. If there is no touch response suddenly, Re-plug the power to reset the touch static electricity.
2. If bubbles appear on the panel, remove the protective film.
3. If you have any questions when installing, please feel free to contact us. Thank you.