Swivel Glide Sofa Set

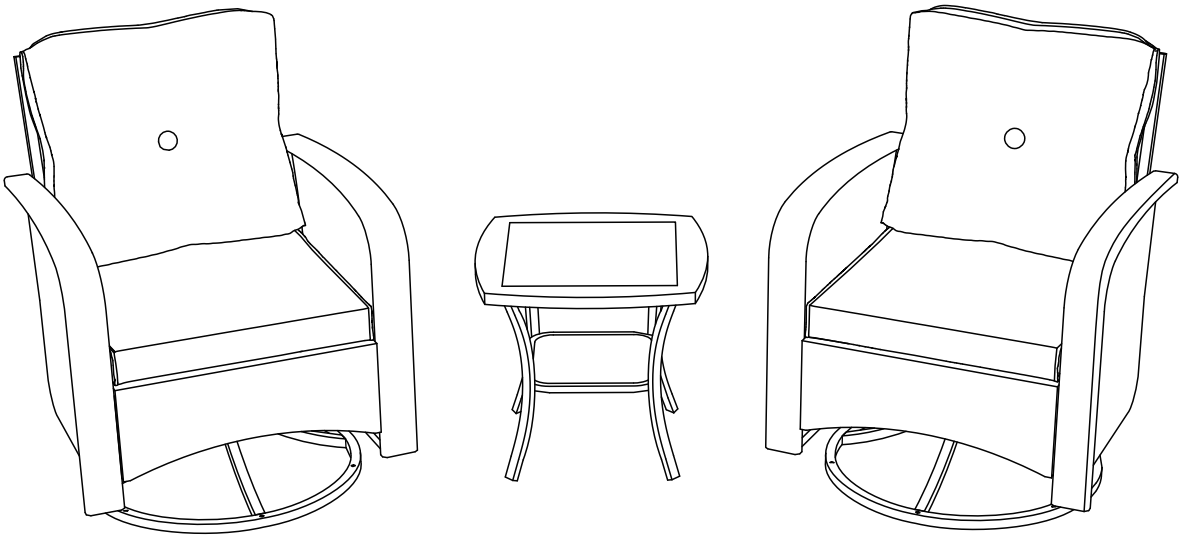

Model:P2603

Scan the QR code to learn more about our product.

SPECIFICATIONS

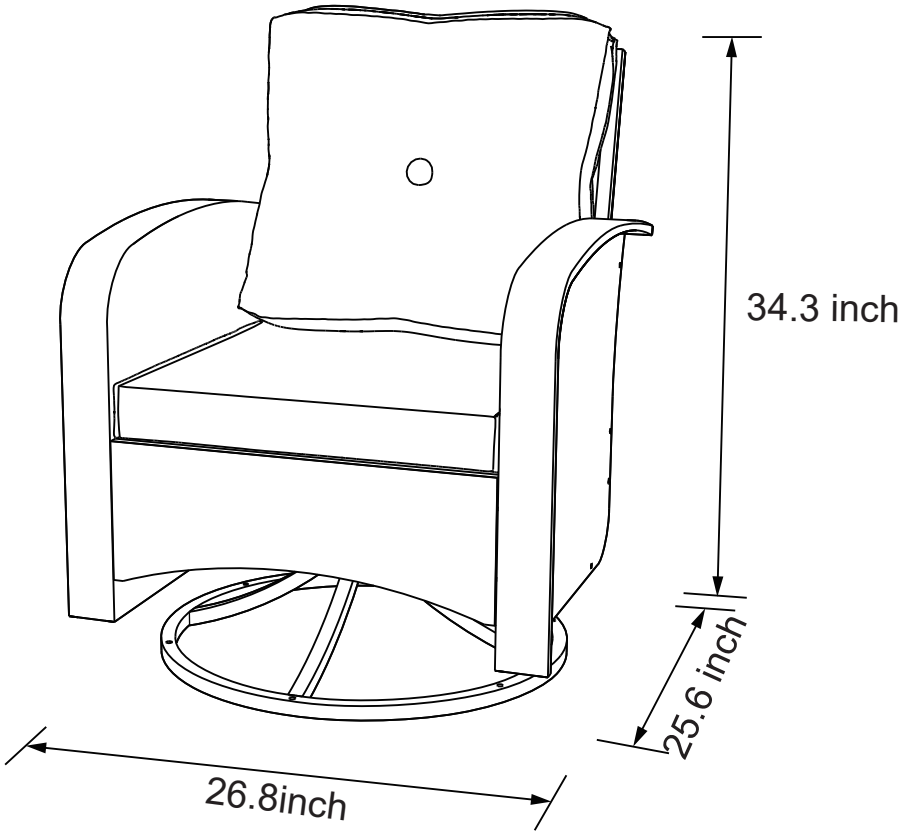

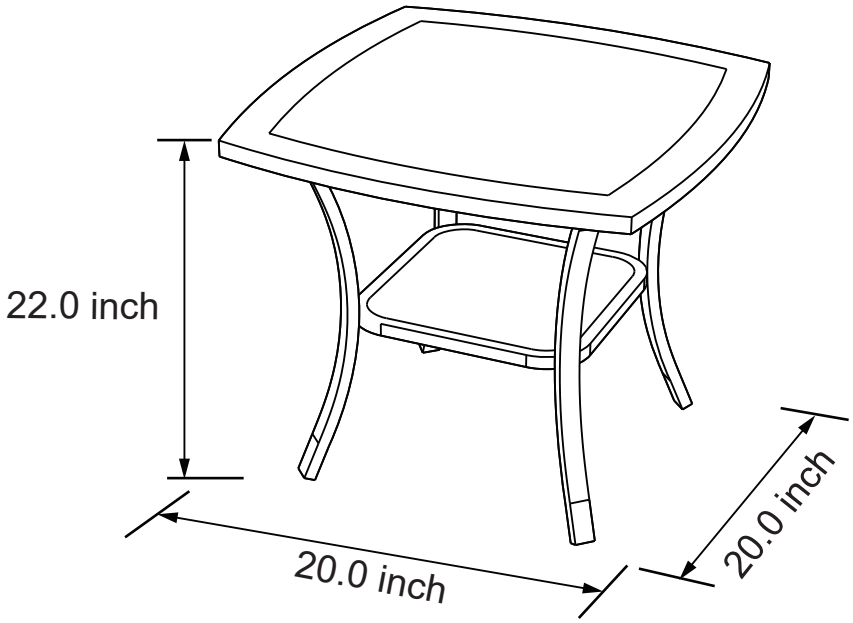

CONTENTS

Specifications.....1
Contact us.....2
Important.....3
Packing List.....4
Parts List.....5
Screw Set.....6
Extra.....7
Swivel Chair Instruction.....8
Coffee Table Instruction.....13
Maintenance and Care.....14

CONTACT US

If you have any questions or concerns regarding our product, please don't hesitate to contact our customer service team at [service@outsofas.com]. We are committed to providing excellent service and ensuring your satisfaction.

Scan The Qr Code And Click The Chat Button To Contact us.

Web:www.outsofas.com

E-mail:service@outsofas.com

ALL WEATHER WICKER PATIO 360-DEGREE SWIVEL ROCKING CHAIR

ASSEMBLY INSTRUCTION

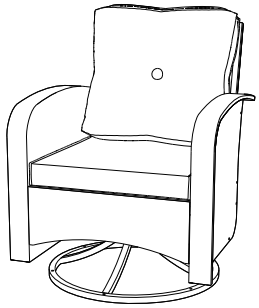

WARNING: This chair is not a toy. The proper use of the chair is for one-person seating only. Further, the chair is not to be used for standing purposes and it will not function as a stool or step-ladder. Besides, please use this chair on even surfaces only. Chair tested for use at a weight of 250lb. Improper use of this product or failure to use as directed may result in injury. This chair is not intended for commercial use.

IMPORTANT:

Please read all the instructions and warnings before assembling. In order to make the whole product adjust to the best, please install all the screws on the product and tighten all the screws after adjusting the product which can stand on the floor even.

WARNING:

·Please keep all children and pets away from the assembly area. In addition, children and pets should be supervised when they are in the area of product construction.
·Please make sure to keep the assembly area at least 6 feet from any obstruction such as a fence, garage, house, overhanging branches, laundry line or electrical wires.
·Some parts may contain sharp edges. Therefore, when assembling and using this product, basic safety precautions should always be followed to reduce the risk of personal injury and damage to the product. Please read all instructions before assembly and use.
·Please check all bolts for tightness before use. IMPORTANT-check and tighten bolts often to keep them secure!
·The chair is not to be used for standing purposes and will not function as a stool or stepladder.
Again, this chair is used on even surfaces only.
·The chair used at the weight of 250lb. Improper use of this product or failure to use as directed may result in injury. Not intended for commercial use.

CARE & MAINTENANCE

SPILLS
Please immediately wipe up the spill using a white damp cloth. Repeat process if necessary until stain is gone.
FABRIC CARE
Please use cold water and hand wash, use non-chlorine bleach when needed, lay flat to dry. Cool iron if necessary. Do not dry clean.
RESIN WICKER PRODUCT CARE
Before using, please clean the product completely with a soft dry towel. Moreover, when the chair not in use, you should wipe off any dirt or loose objects, wash with a mild solution of soap and water, rinse thoroughly and dry completely. Please do not use strong detergent or abrasive cleaners. Since nuts and bolts can loosen over time, so please check nuts and bolts on all chairs and tables, re-tighten if necessary.

Packing List

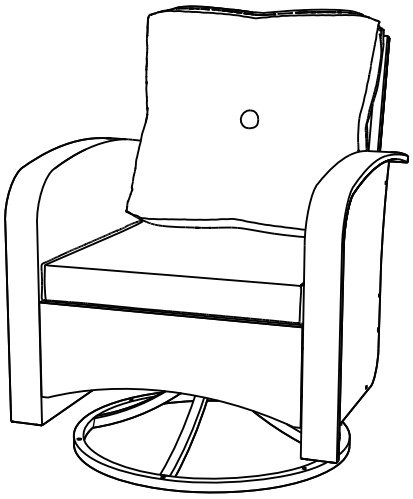

Swivel Glide Sofa Set-1

Coffee Table

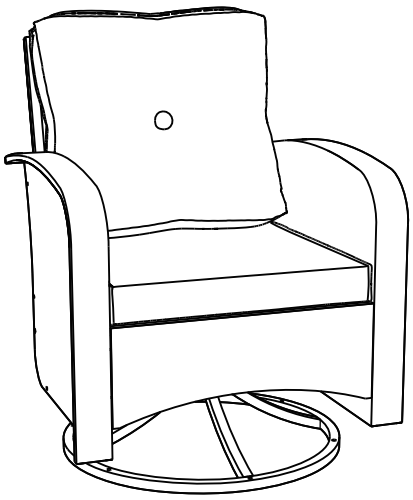

Swivel Glide Sofa Set-2

PARTS LIST

A × 2 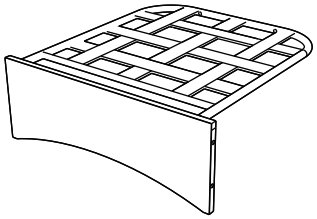	B × 2 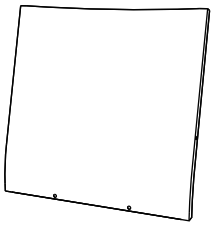	C × 2 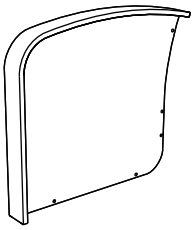
Seat Part	Back Part	Left Armrest
D × 2 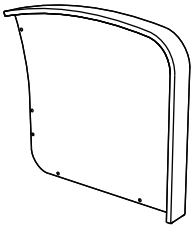	E × 2 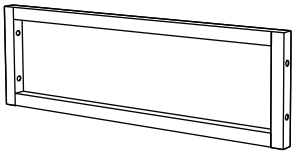	F × 2 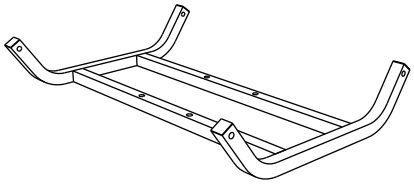
Right Armrest	Back Connection	Connection Frame
G × 2 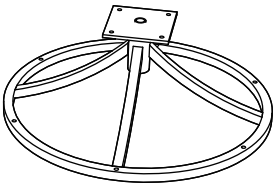	H × 2 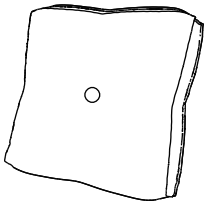	J × 2 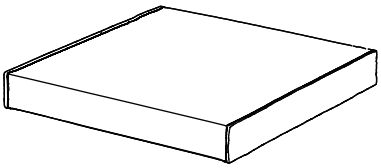
Swivel Chair Base	Pillow	Cushion
K × 1 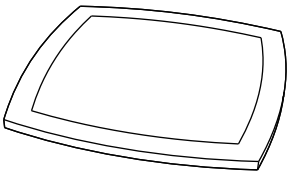	L × 1 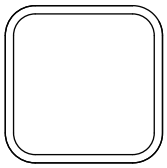	M × 4
Coffee Table Top	Coffee Table Platform	Coffee Table Legs

Screw Set

S × 12 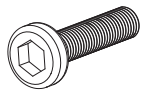 Bolt M6×15	Q × 8 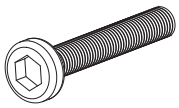 Bolt M6×35	T × 20 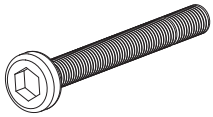 Bolt M6×45	R × 24 Washer Nut
P × 12 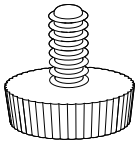 Adjustable Screws	N × 8 Base Connector	O × 8 Gasket	W × 1 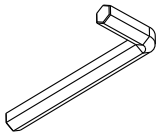 Spanner
V × 1 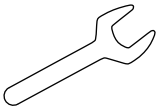 Wrench	Z × 8 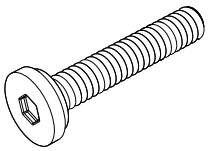 Bolt M6×35	U × 16 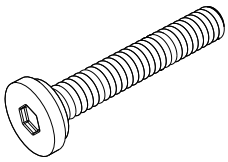 Bolt M6×45	Y × 24 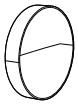 Bolt Cap

Extra

S × 2 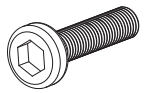 Bolt M6×15	Q × 2 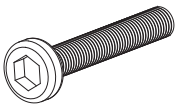 Bolt M6×35	T × 2 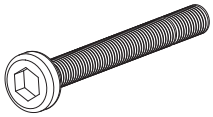 Bolt M6×45	R × 2 Washer Nut
P × 2 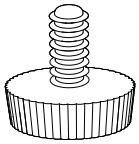 Adjustable Screws	O × 2 Gasket	X × 2 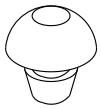 Glass Mat	U × 2 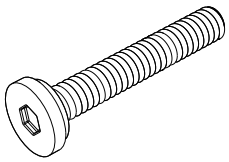 Bolt M6×45
Y × 2 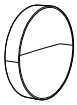 Bolt Cap	Z × 2 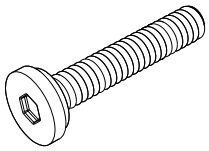 Bolt M6×35		

WARNING:Failure to locate parts in accordance with these diagrams, or failure to use special parts provided with this equipment, may result in property damage or personal injury.

Step 1

Attach the Back Part(B) to the Seat Part(A) with screws.
NOTE:Do not tighten all screws now.

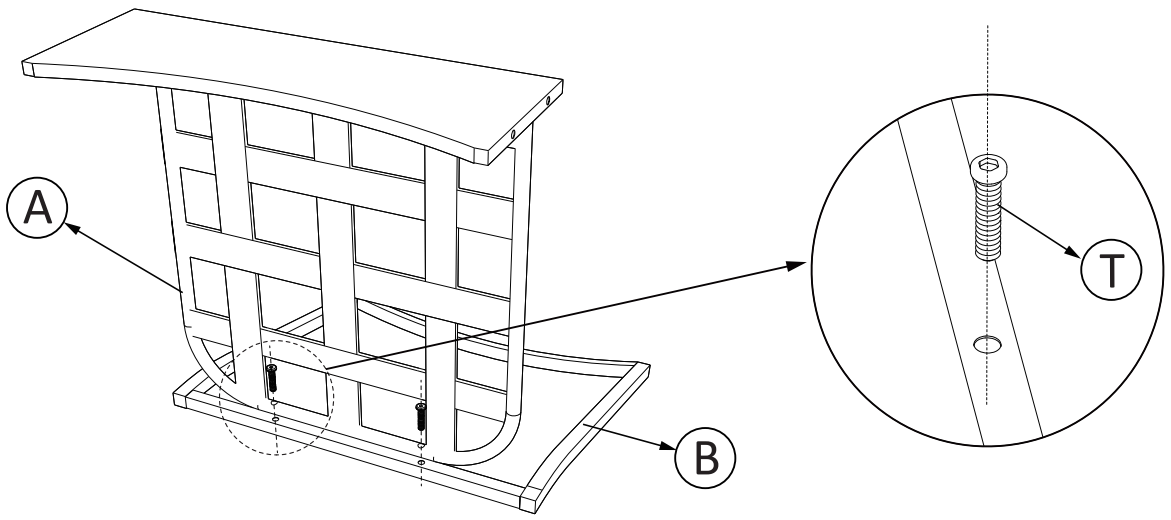

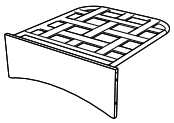 Ⓐ × 1	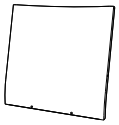 Ⓑ × 1	Bolt M6×45 Ⓣ × 2	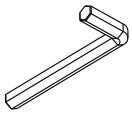 Ⓦ × 1

Step 2

Connect the Left Armrest(C) to the Back Part(B) and Seat Part (A) with screws.
NOTE:Do not tighten all screws now.
The screw head of U is stepped, and the screw head of Q is oblate.

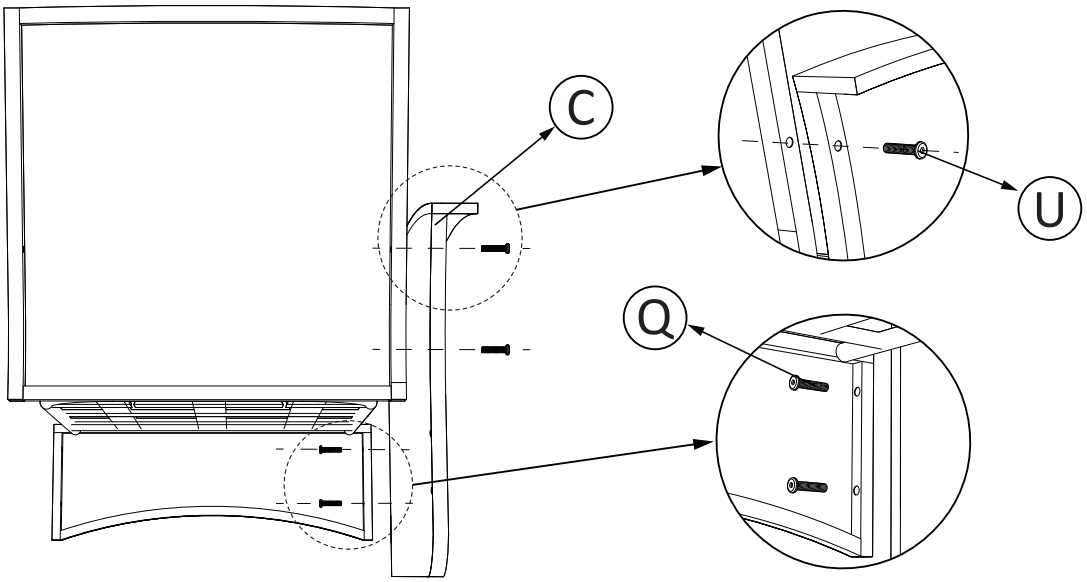

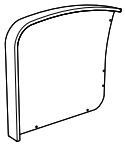 Ⓒ × 1	Bolt M6×35 Ⓠ × 2	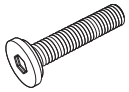 Bolt M6×45 Ⓤ × 2	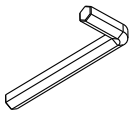 Ⓦ × 1

Step 3

Connect the Right Armrest(D) to the Back Part(B) and Seat Part (A) with screws.

NOTE:Do not tighten all screws now.

The screw head of U is stepped, and the screw head of Q is oblate.

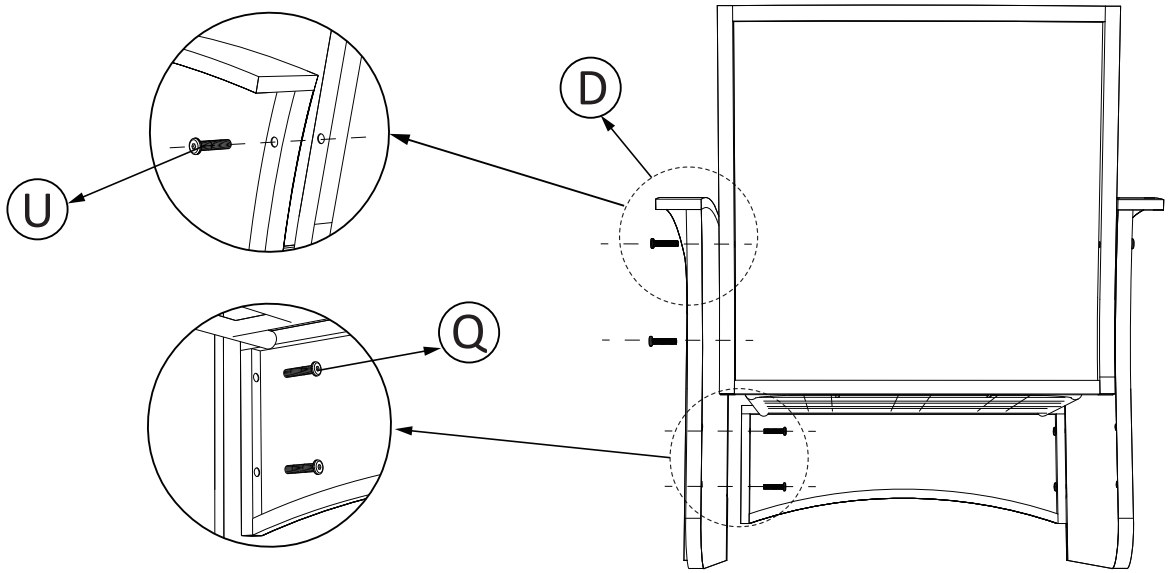

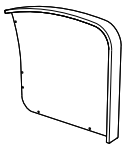 D × 1	Q × 2 Bolt M6×35	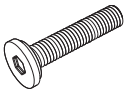 U × 2 Bolt M6×45	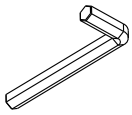 W × 1

Step 4

Install the Back Connection (E) to the rear bottom side of the handrail (C) and (D) and tighten using the bolts (Z).

NOTE:Please tighten all bolts.

The screw head of U is stepped, and the screw head of Q is oblate.

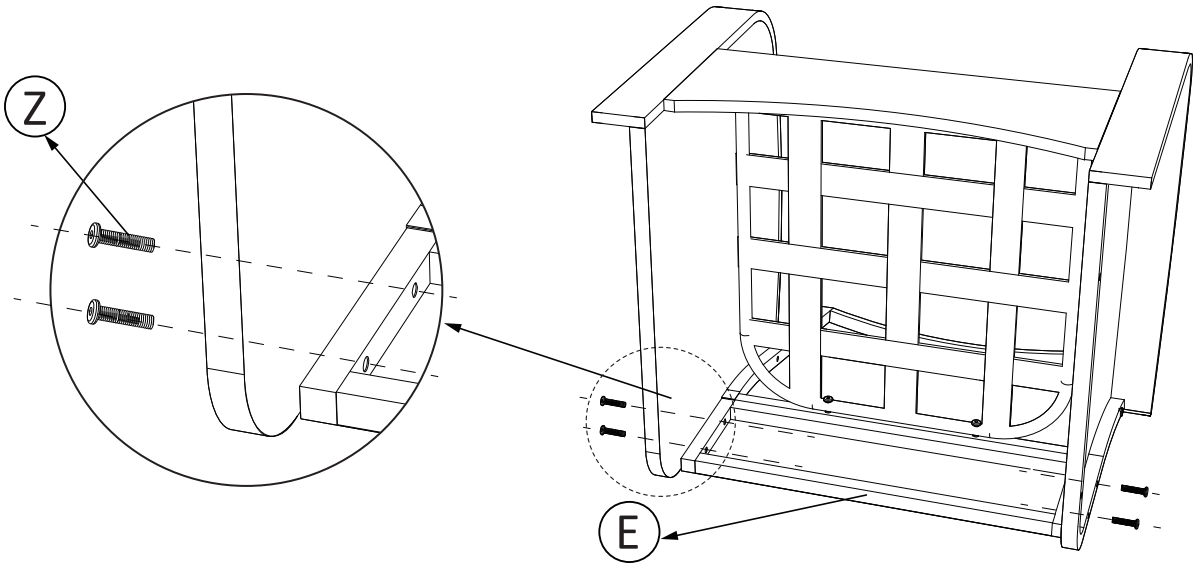

E × 1	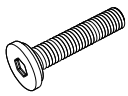 Z × 4 Bolt M6×35	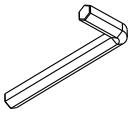 W × 1

Step 5

Connect the Connecting Frame(F) and the Swivel Chair Base(G) with screws(T).
NOTE:Please fully tighten all bolts at this time.

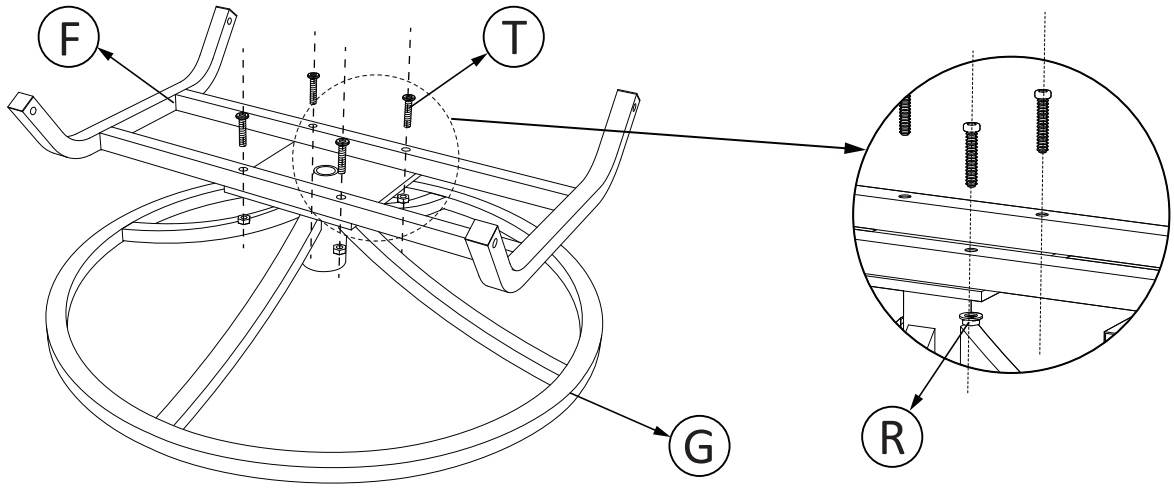

Ⓕ × 1	Ⓖ × 1	Bolt M6×45 Ⓣ × 4	Ⓡ × 4	Ⓦ × 1

Step 6

Connect the Base Connector(N) to the Connecting Frame(F) with screws(T).
NOTE:THIS STEP IS VERY IMPORTANT. DO READ THE INSTRUCTION AND DIAGRAM CAREFULLY.

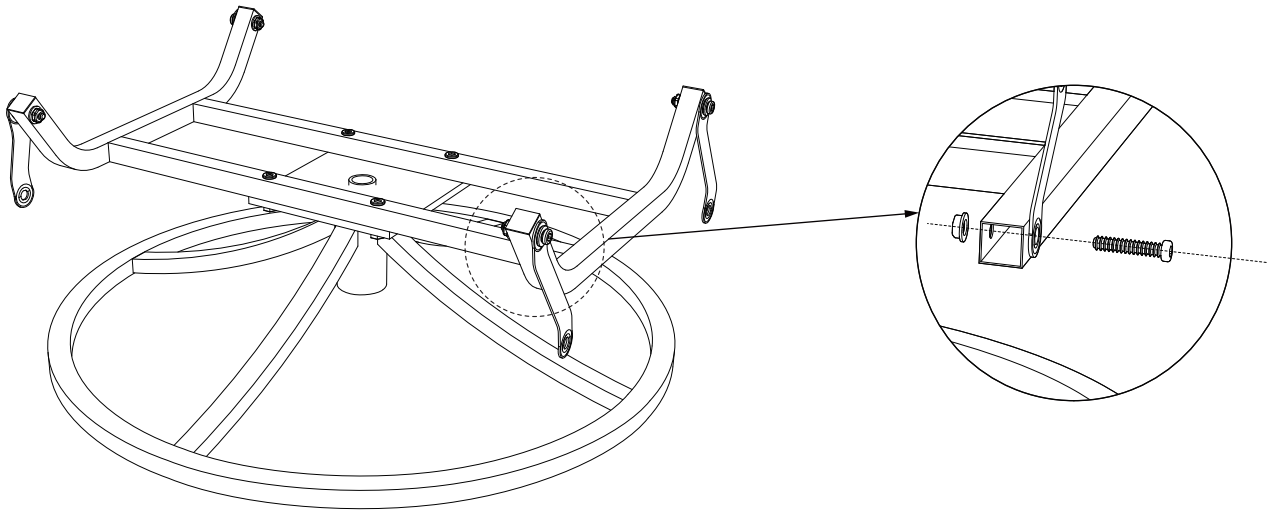

Ⓝ × 4	Bolt M6×45 Ⓣ × 4	Ⓡ × 4	Ⓦ × 1

Step 7

Connect the metal strip with the left and right armrests under the sofa with screws.
NOTE:Please attach two screws in diagonal position first to keep the balance,then install the other two screws.

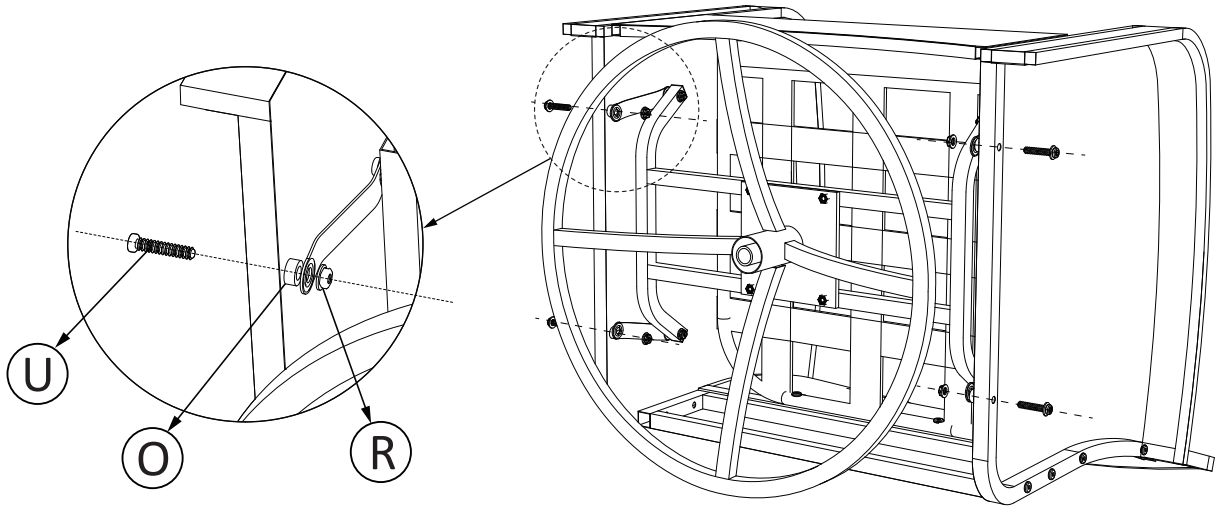

The screw head of U is stepped.

Ⓞ × 4	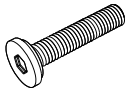 Bolt M6×45 Ⓤ × 4	Ⓡ × 4	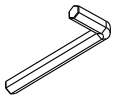 Ⓦ × 1

Step 8

Tighten the Adjustable Screws(P).
Place all caps (Y) on the flat side of all bolts (U).
NOTE:Because the head of screw U is stepped, it can fit cap Y. If cap Y cannot be installed, please check whether the screw is properly installed.

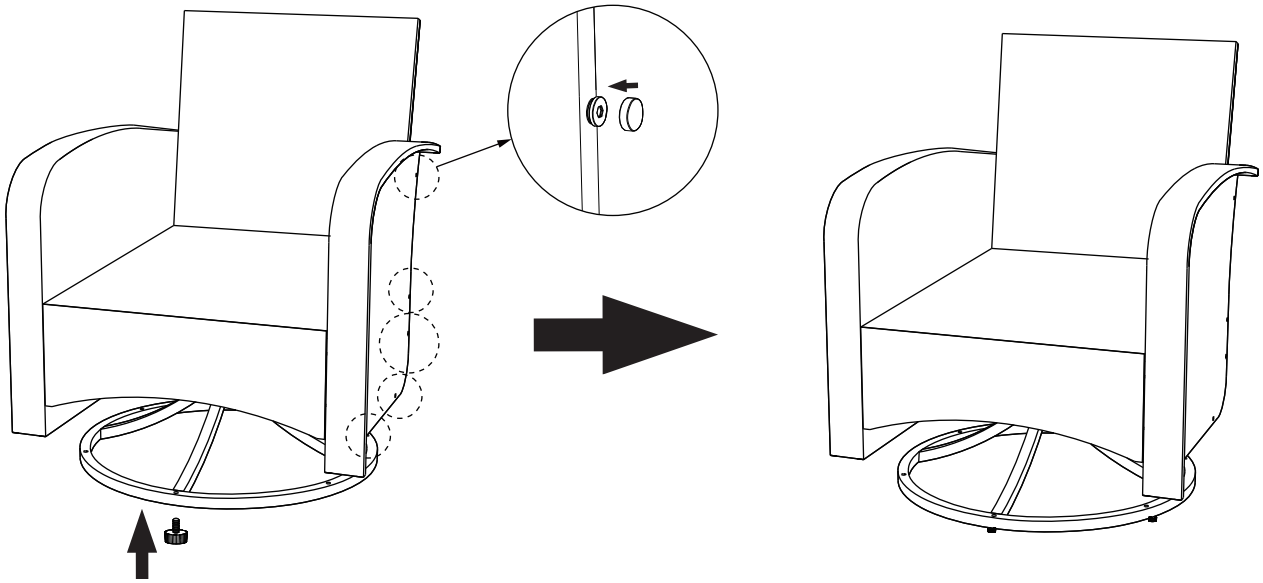

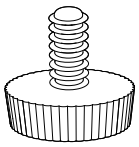 Ⓟ × 6	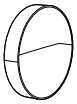 Ⓨ × 12

Step 9	Put the seat cushion and pillows on. **NOTE**:The cushions can be fixed on the back of the sofa with ties.If you don't need the ties, you can cut them off.

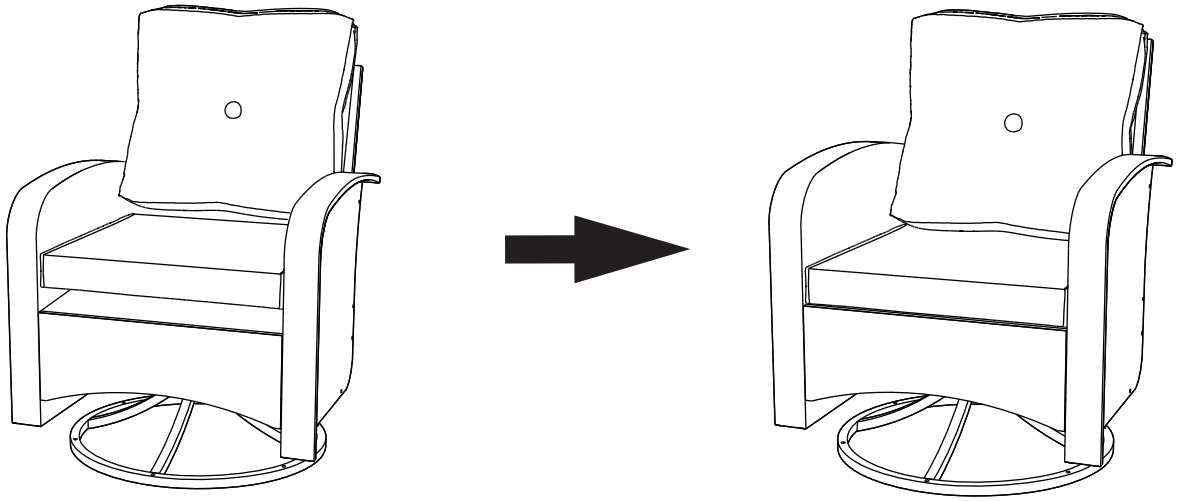

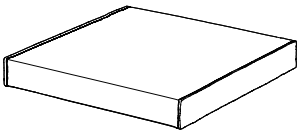 Ⓙ × 1	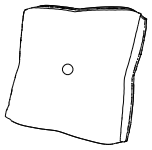 Ⓗ × 1

When installing the tea table, please follow the order specified in the instruction manual; otherwise, the installation may fail.

Step 10	Connect the coffee table legs(M) to the coffee table platform(L) with screws(S). **NOTE**:Do not fully tighten all bolts at this time.

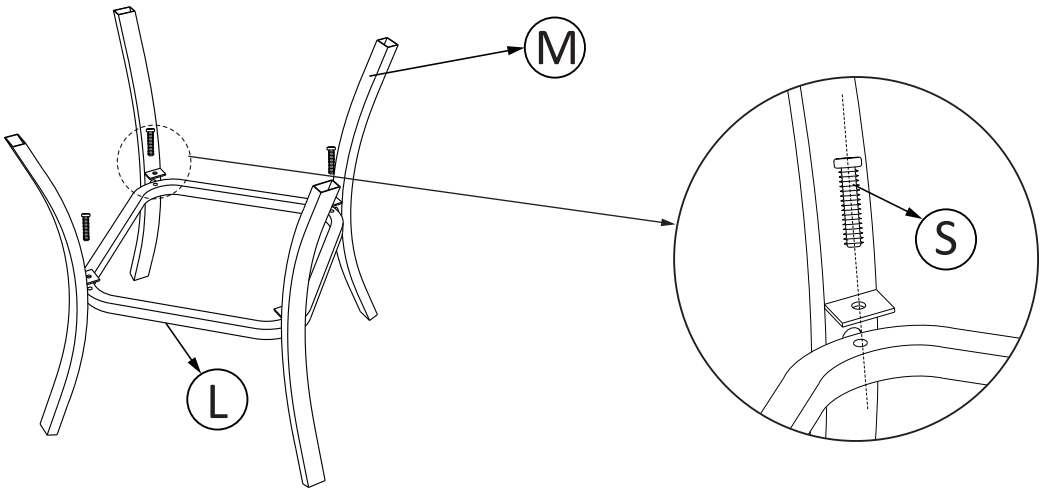

Bolt M6×15 Ⓢ × 4	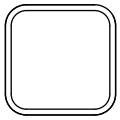 Ⓛ × 1	Ⓜ × 4	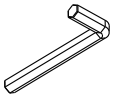 Ⓦ × 1

Step 11	Install the lower part of the mounted coffee table, on the coffee table top (K) and tighten using the bolts (S). **NOTE**:Please fully tighten all bolts at this time.

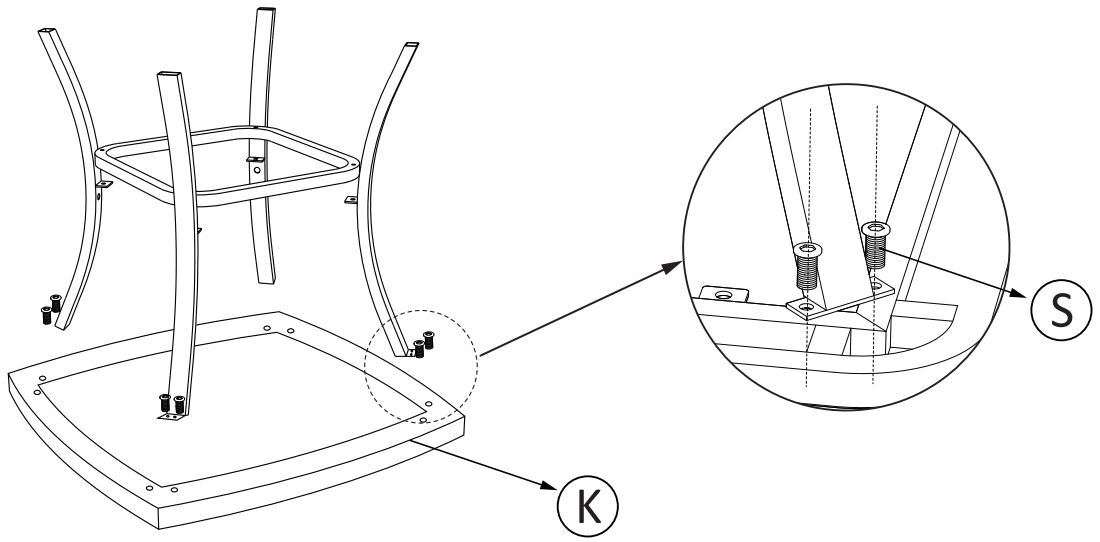

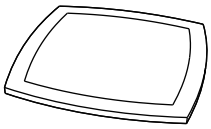 Ⓚ × 1	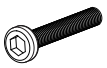 Bolt M6×15 Ⓢ × 8	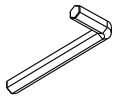 Ⓦ × 1

Step 12	Place the glass on the glass mat, and the coffee table assembly is complete.

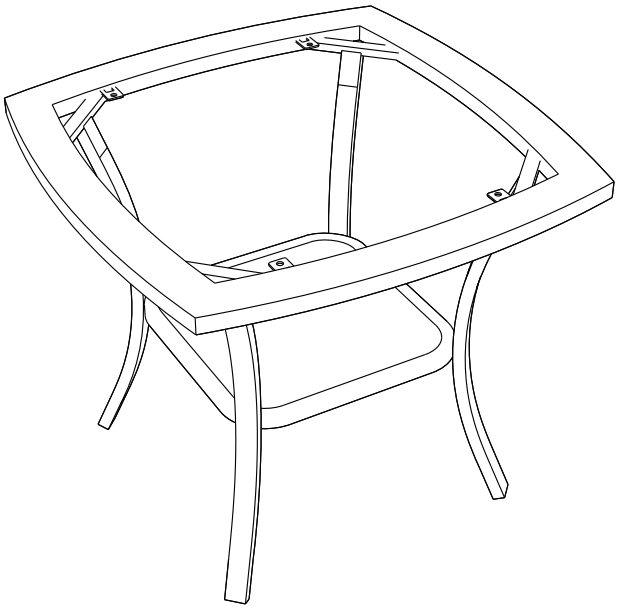

Sofa cover washing instruction

Seat Cushion

Take the cushion insert out of the fabric cover

Wash the cloth cover after removing it

Maintenance and Care

Cleaning

For the rattan frame, use a damp cloth to clean off dust, dirt, or stains. Avoid using harsh chemicals, abrasive cleaners, or scrubbers.

For the cushions and pillows, follow the care instructions on the covers. Wash removable covers in cold water, and for non-removable covers, spot clean with mild soap and water.

Storage

If the sofa set is not in use for extended periods, cover the furniture or store it indoors in a dry, cool location to prevent damage from weather or dirt.

Inspection:

Regularly check the furniture for any loose parts, wear, or damage. Tighten screws and bolts as needed, and replace any damaged components promptly.

Scan the QR code to learn more about our product.