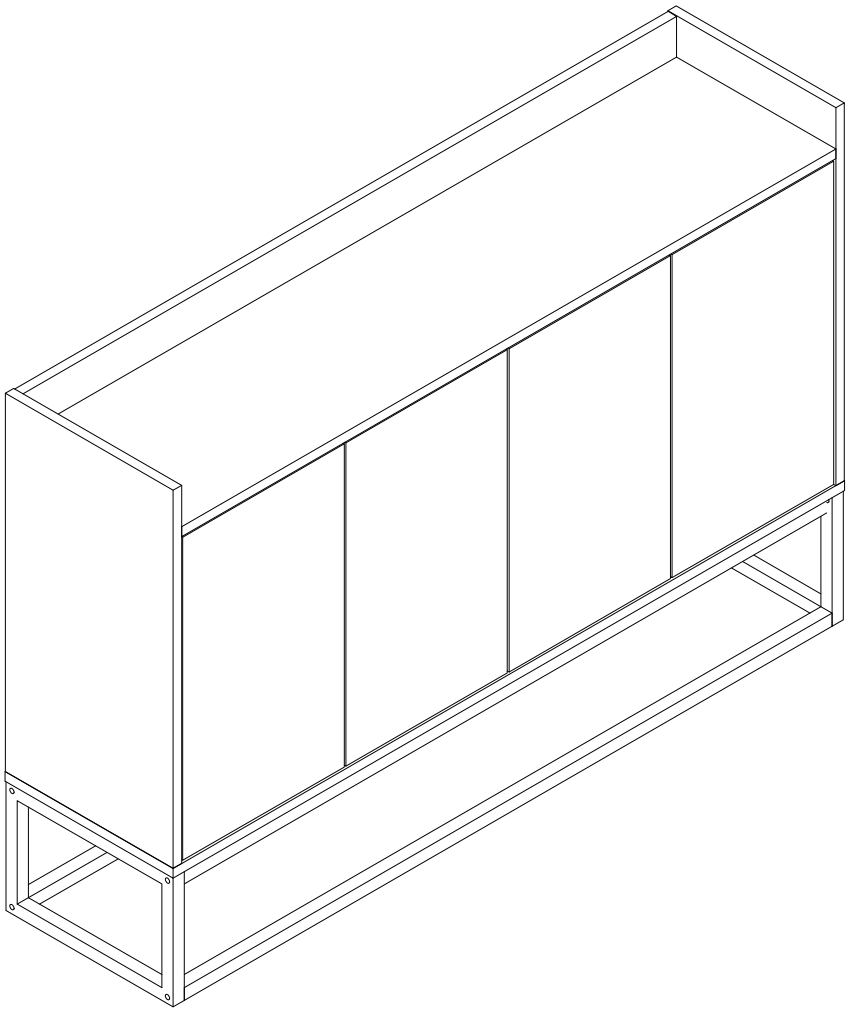

Dimensions

Width - 47.2inch
Depth - 11.8inch
Height - 31.5inch

Important – Please read these instructions fully before starting assembly

Issue 1 - 11/13/22

Safety and Care Advice

Important – Please read these instructions fully before starting assembly

• Check you have all the components and tools listed on the following pages.

• Remove all fittings from the plastic bags and separate them into their groups.

• Keep children and animals away from the work area, small parts could choke if swallowed.

• Make sure you have enough space to layout the parts before starting.

• During assembly do not stand or put weight on the product, this could cause damage.

• Assemble the item as close to its final position (in the same room) as possible.

• Assemble on a soft level surface to avoid damaging the unit or your floor.

• Parts of the assembly will be easier with 2 people.



• To reduce the likelihood of damaging your product please ensure that your power drill is set on a low torque setting.

Care and maintenance

• Only clean using a damp cloth and mild detergent, do no use bleach or abrasive cleaners.

• From time to time check that there are no loose screws on this unit.

• This product should not be discarded with household waste. Take to your local authority waste disposal centre.

Handy Hints

• Assemble all parts and bolts loosely during assembly, only once the product is complete should you fully tighten the bolts

• Regularly check and ensure That all bolts and fittings are tightend properly.

WARNING
In order to help prevent overturning – please follow these instructions

To help prevent product toppling over please follow the below steps:-

Use the anti tip stap or wall fixing method provided (if applicable)
Do not allow children to climb or hang on the furniture
Do not open more than one drawer at a time
Do not place heavy items in the top drawers
Do not place heavy items on top of the furniture, unless the furniture has been designed for this purpose

please note that only the anti tip strap is provided.
You will need to provide wall plugs and screws applicable for your wall type

Components - Fittings

Please check you have all the hardware listed below

Note: The quantitie below are the correcet amount to complete the assembly. In some cases more fittings may be supplied than are required.

A 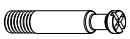 Male Camlock(6*34) x 20	**B**  Female Camlock(15*12) x 20	**C**  Dowel x 10
D  Shelf Support Pin x 4	**E**  6*50mm Screw x 6	**F**  Hex Key M4 x 1
G 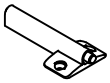 Rebounding device x 4	**H** 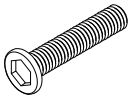 6*30mm Screw x 20	**I**  Door Hinge x 4
J  Door Hinge x 4	**K**  3.5*14mm Screw x 56	**L** 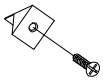 Back Panel Stiffener x 16
M  Wall Fixing Pack x 2	**N**  Rubber Foot Pad x 8	**O**  Ø20 Sticker x 6
P  505mm x 2		

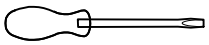

Tools required



Phillips screwdriver
(medium & large)

Ruler - Use this ruler to help correctly identify the screws

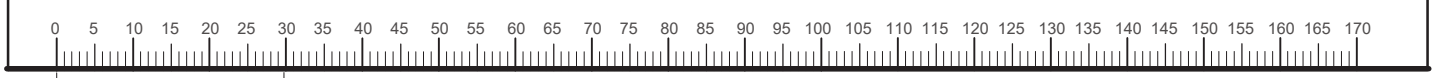



The screws length is measured from the head to the point (30mm screw shown).

Using Camlocks

Step 1

Connect the male camlock as diected in the assembly instructions using a scewdriver.

1

DO NOT OVER TIGHTEN.
NE PAS SERRER EXCESSIVEMENT.

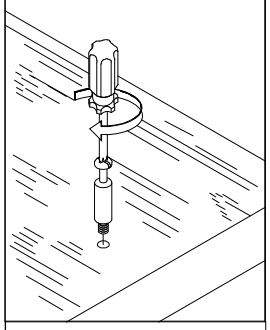

Step 2

Push the male camlock into the entry hole.

2

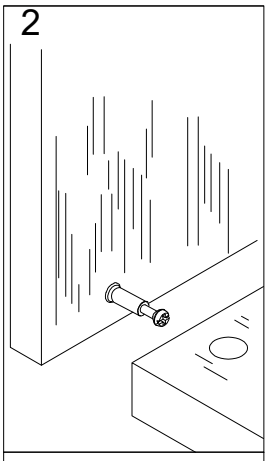

Step 3

Insert the female camlock as shown in the instruction.

Note：ensure that the arrow on the top of the camlock points towards the entry hole for the male camlock.

3

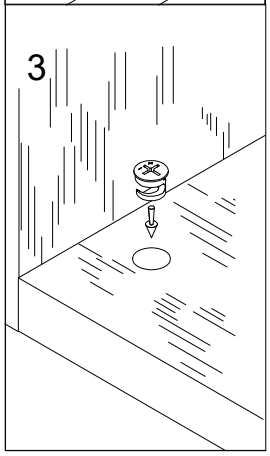

Step 4

Turn the female camlock clockwise with a screwdriver.

You should feel a click when the camlock is locked in place.

The joint is now secure.

4

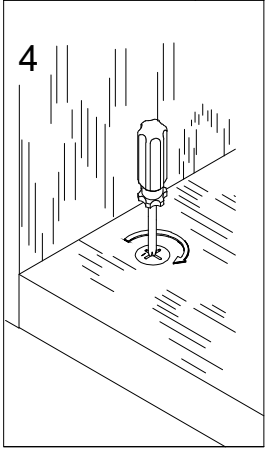

Adjusting Hinges

Hinge adjustment:

a: To move the top panel up or down, loosen screws shown and move top panel to suit

b.To move the top panel in or out, loosen screws shown and move top panel to suit.

Retighten screws

C:To move the top panel left or right, adjust screws shown.

a:

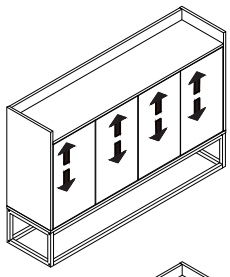

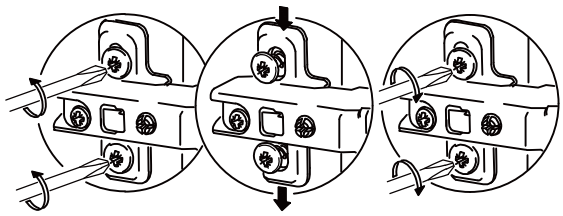

b:

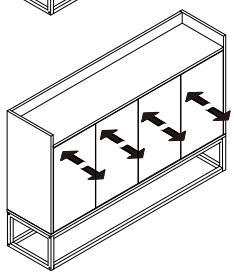

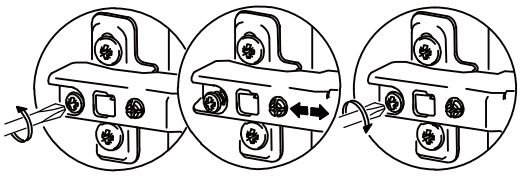

c:

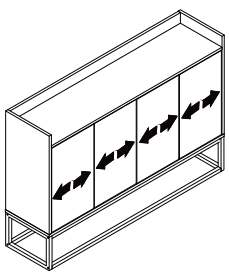

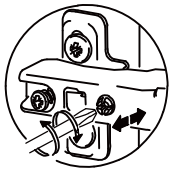

Assembly Instructions

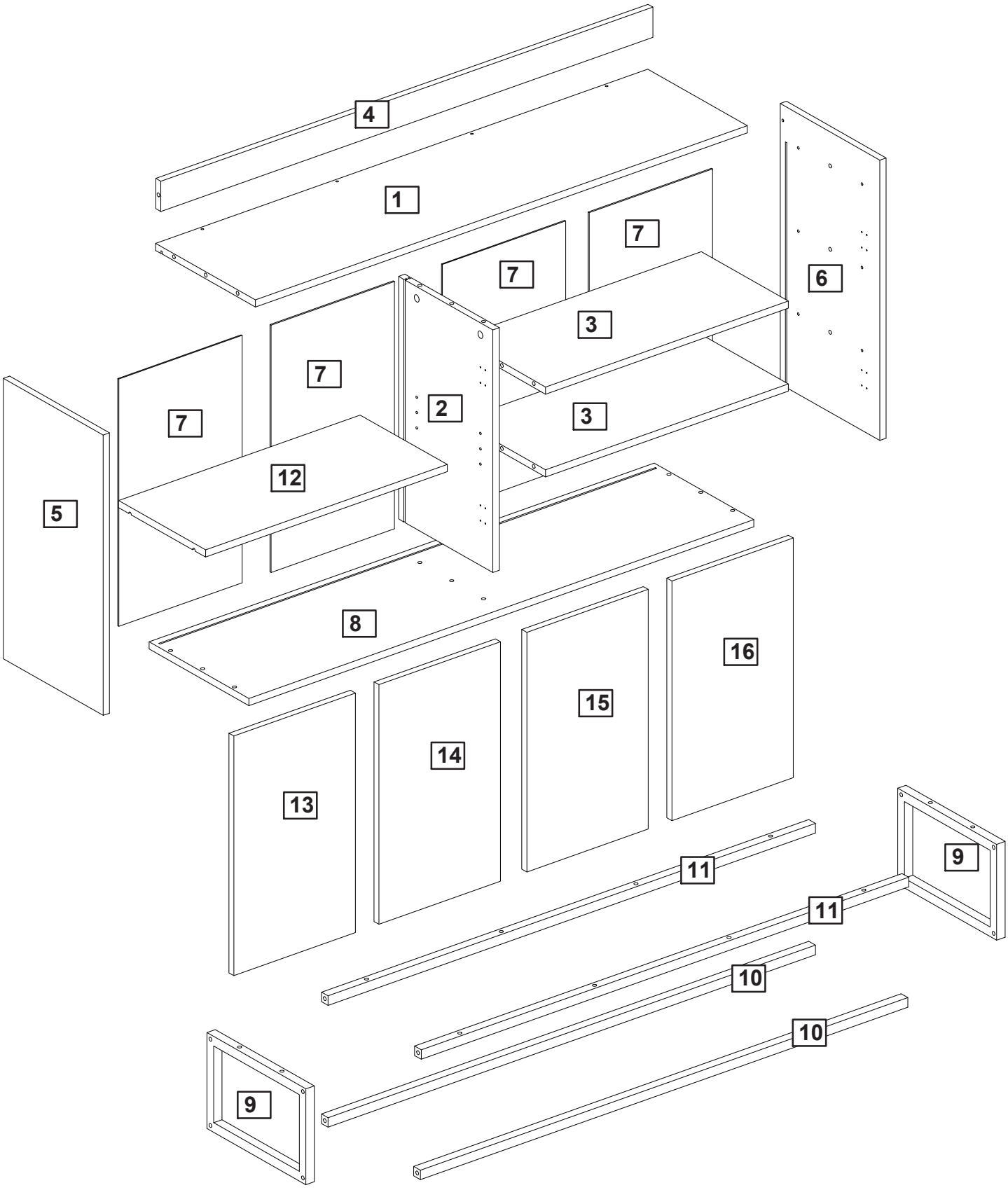

Assembly Instructions

Step 1

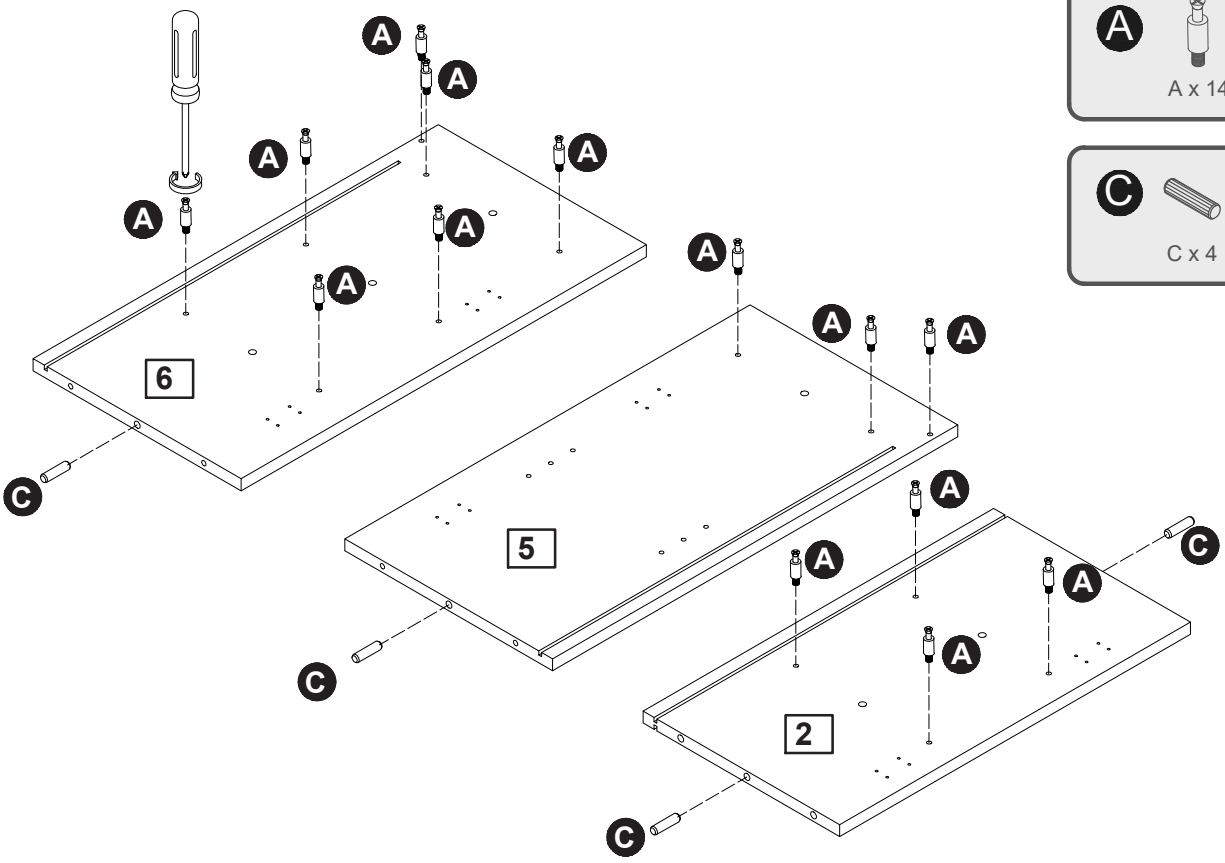

Step 2

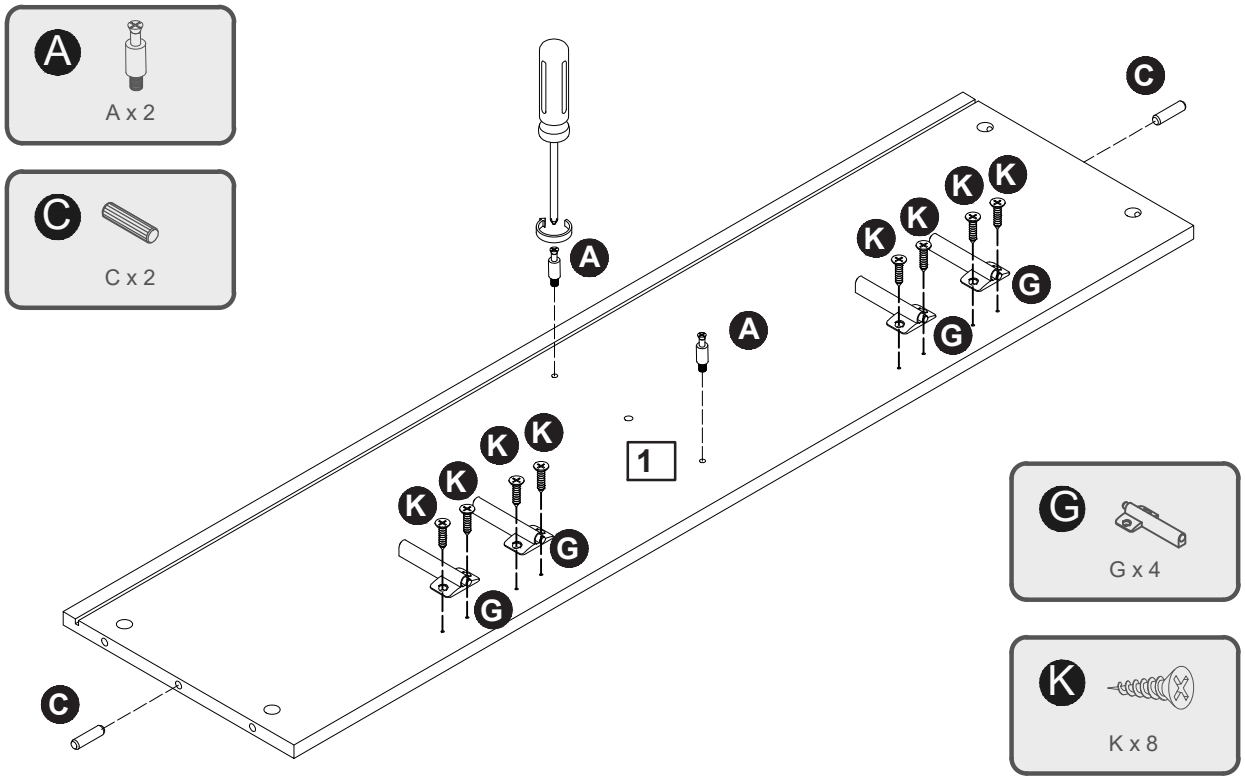

Assembly Instructions

Step 3

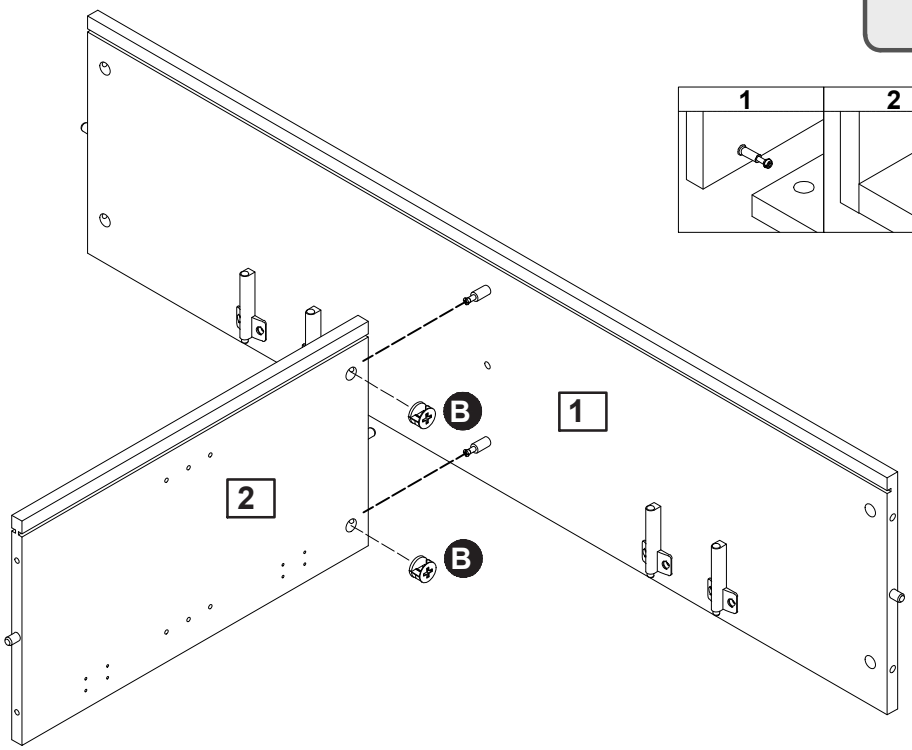



Step 4

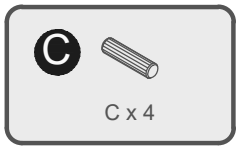

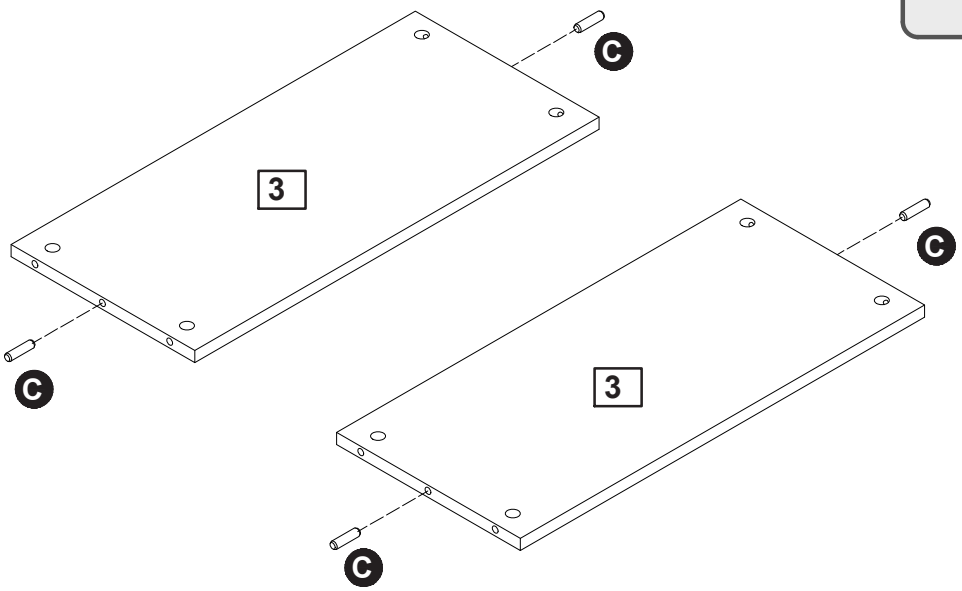

Assembly Instructions

Step 5

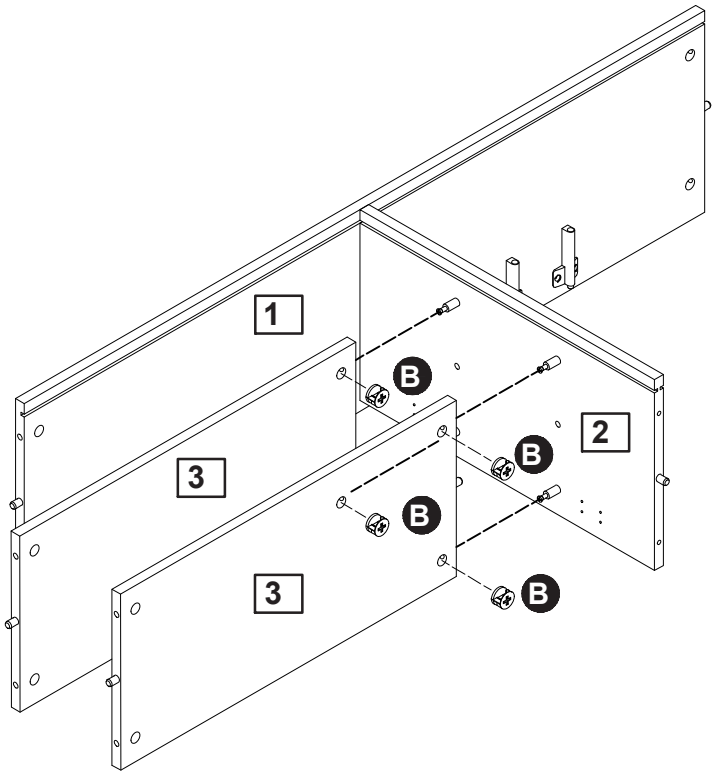



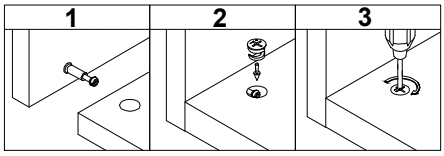

Step 6

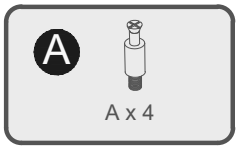

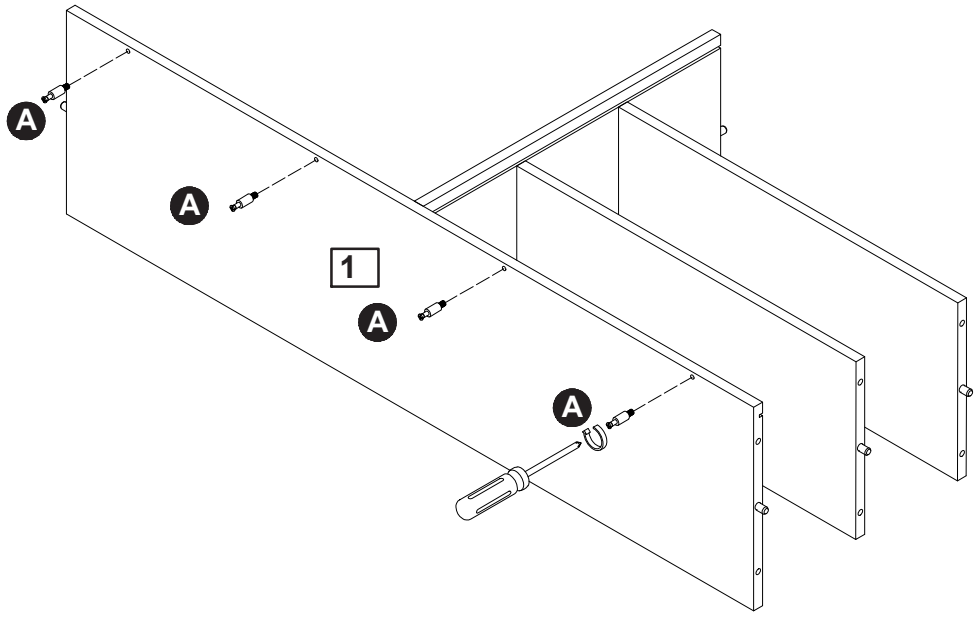

Assembly Instructions

Step 7



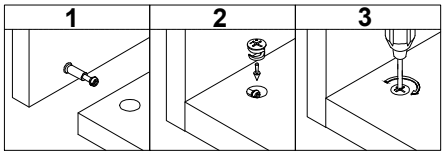

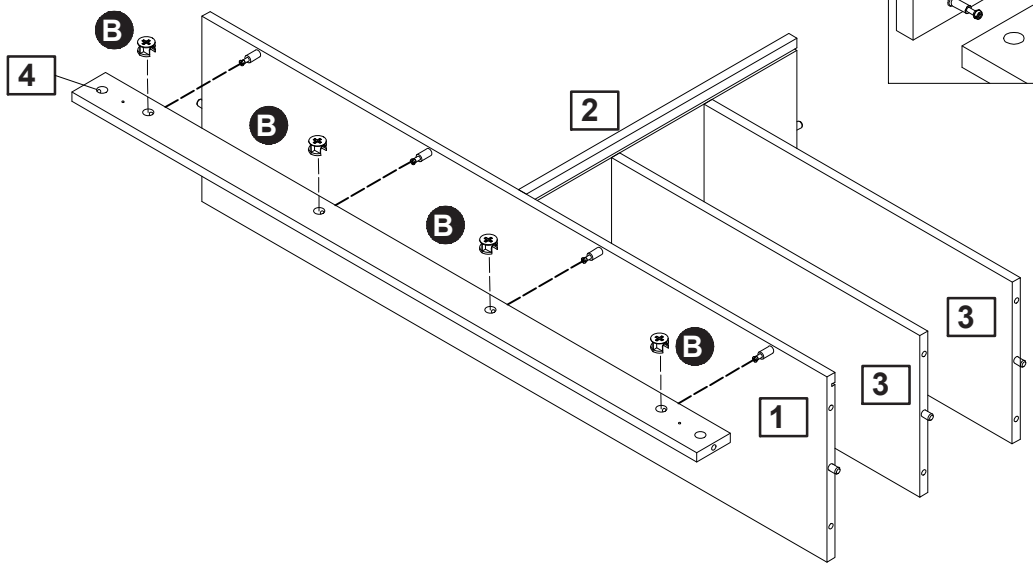

Step 8

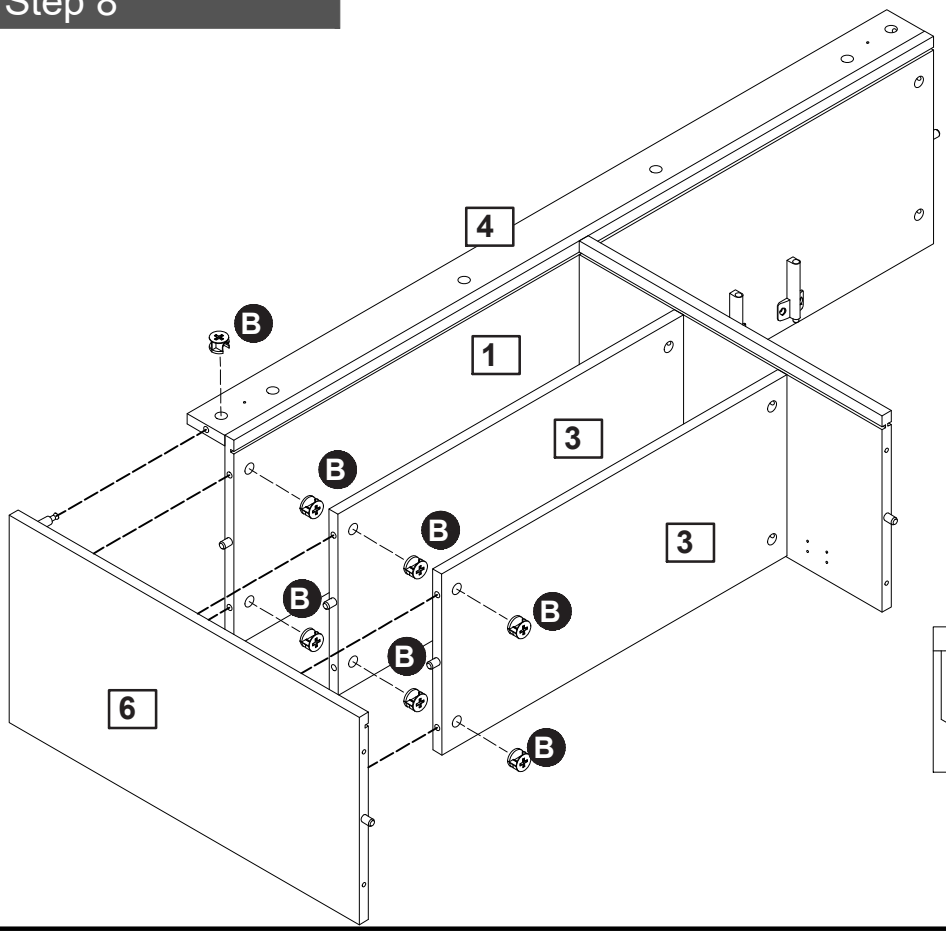

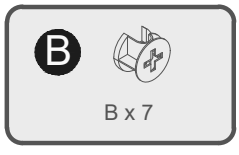

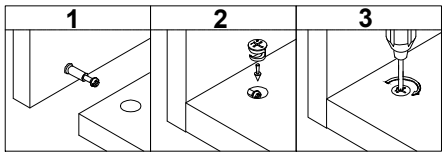

Assembly Instructions

Step 9

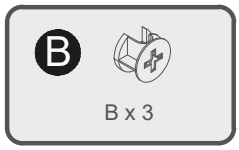

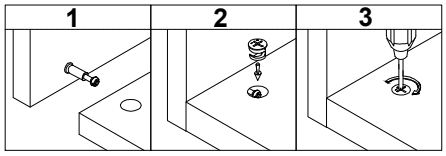

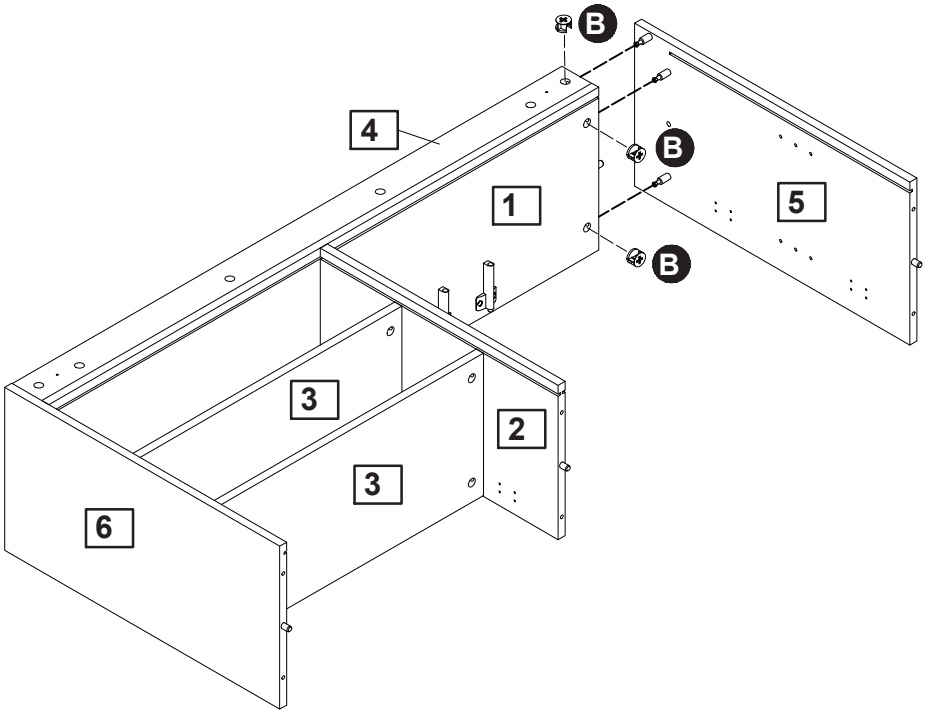

Step 10

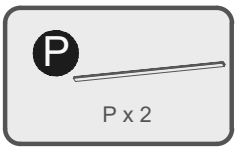

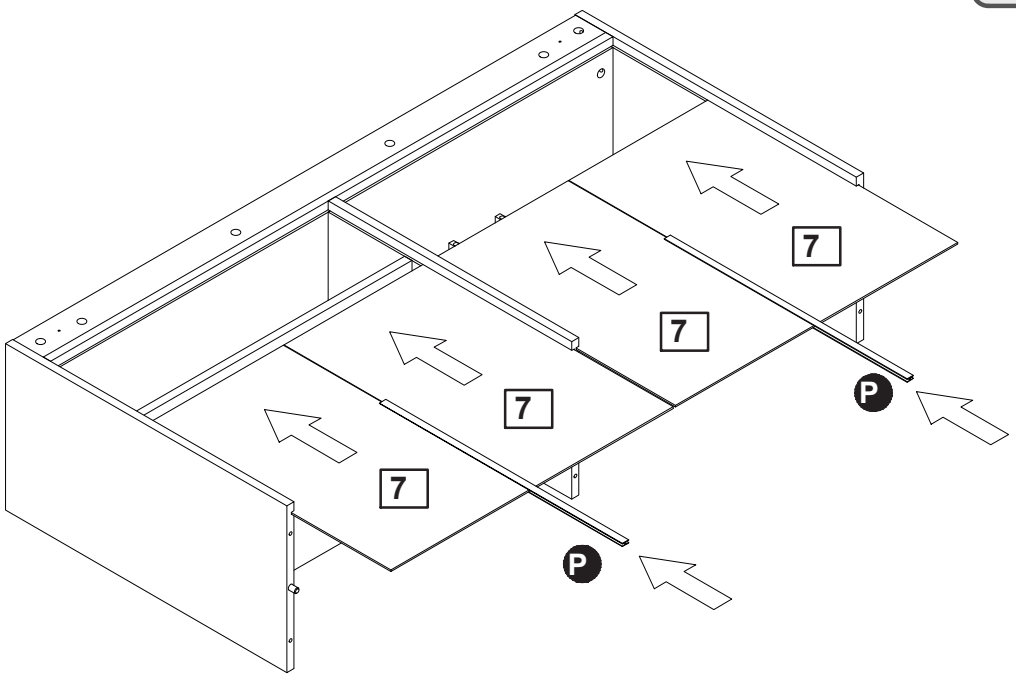

Assembly Instructions

Step 11

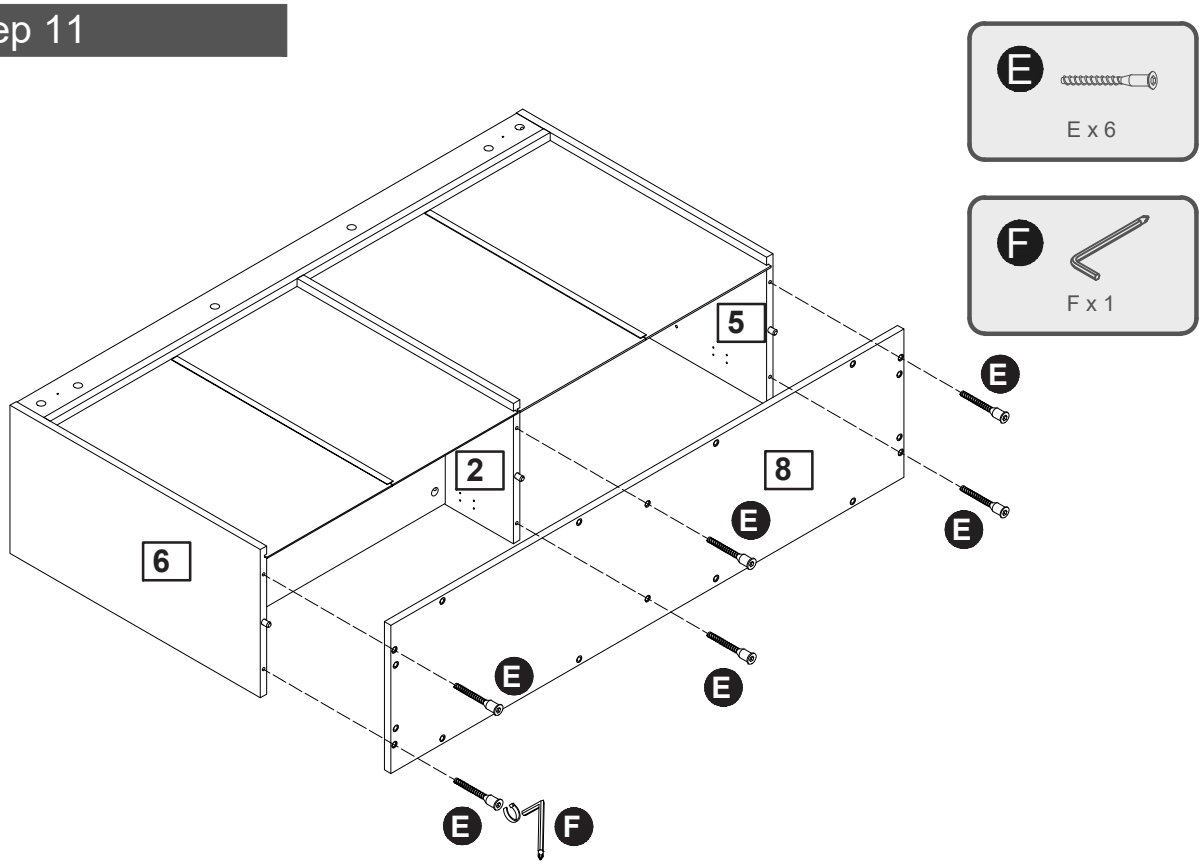

Step 12

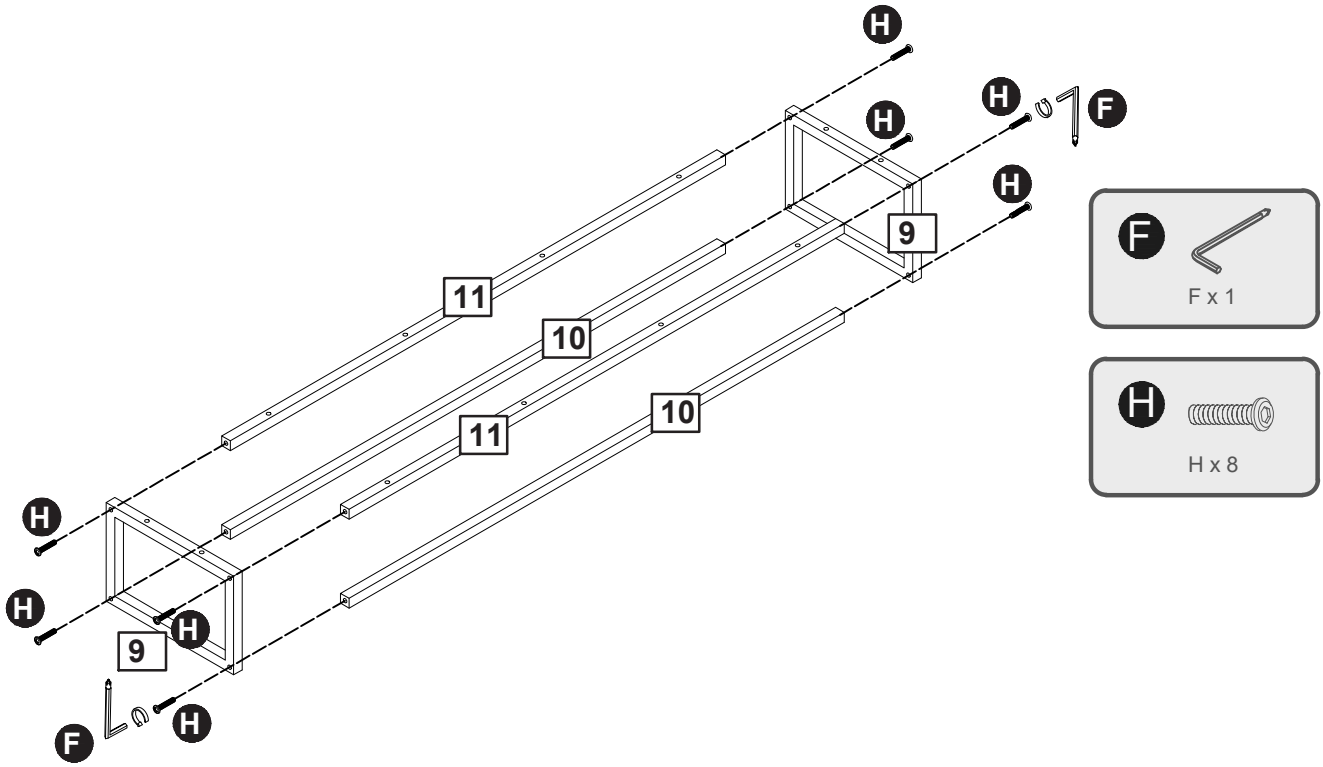

Assembly Instructions

Step 13

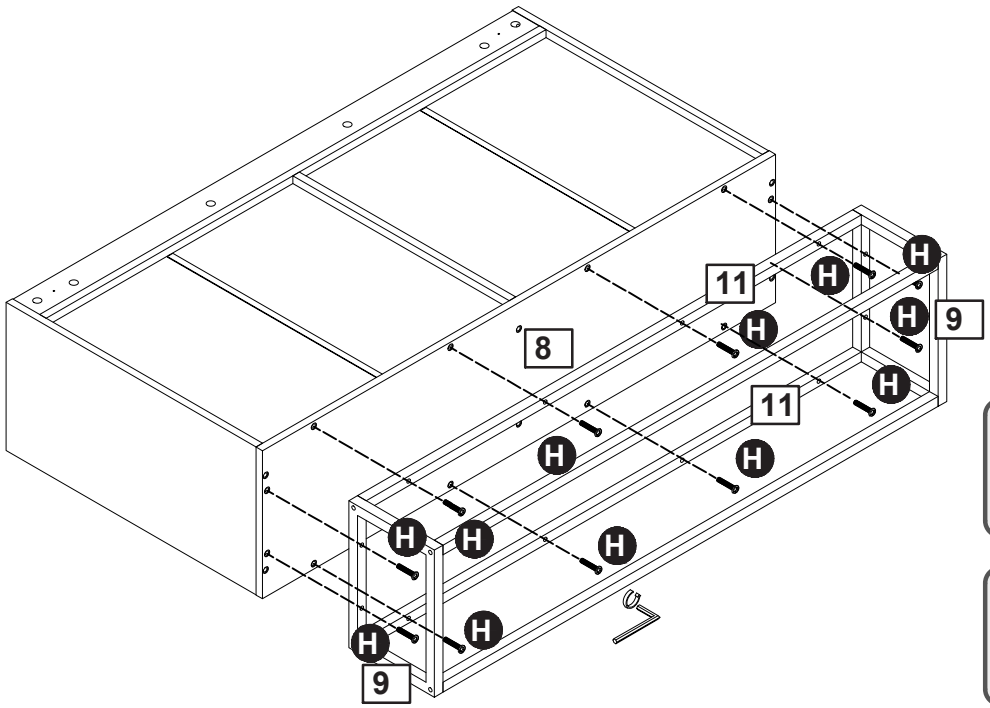

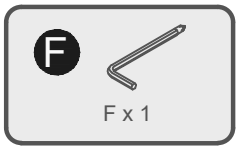



Step 14

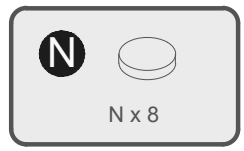

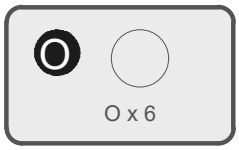

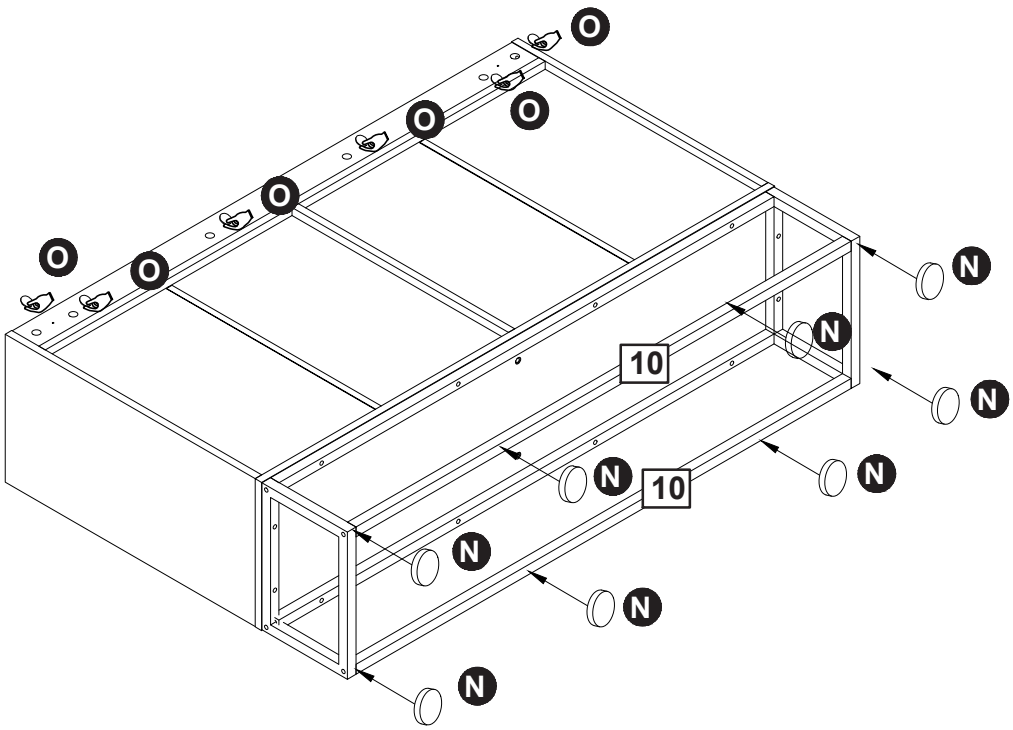

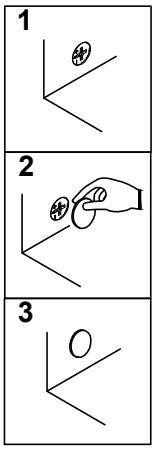

Assembly Instructions

Step 15

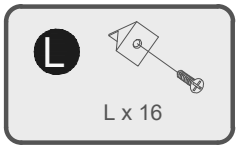

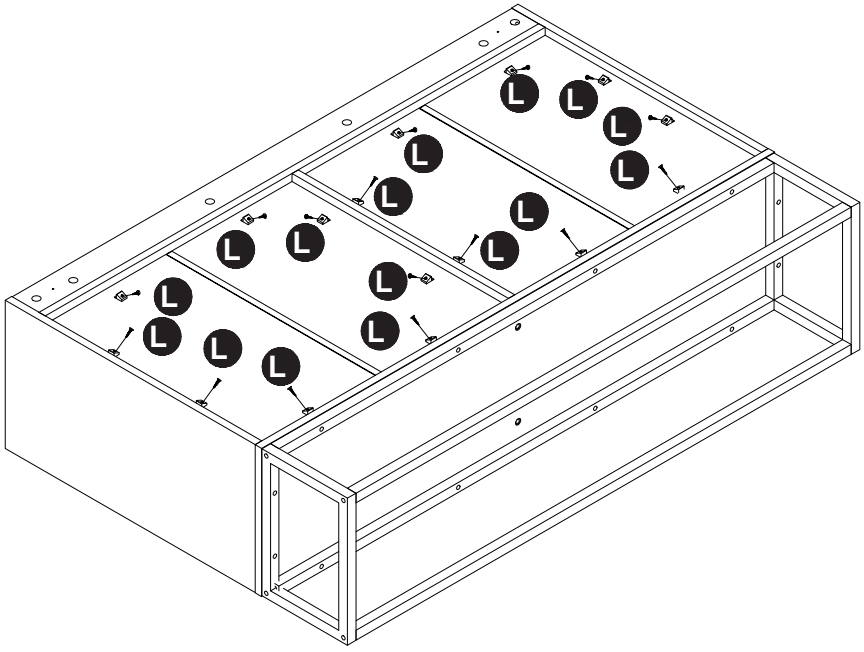

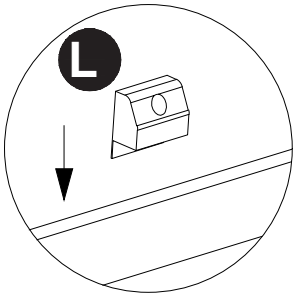

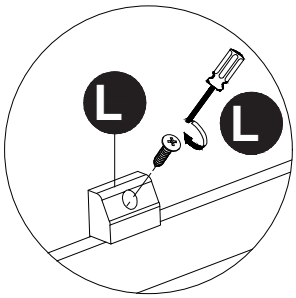

Step 16

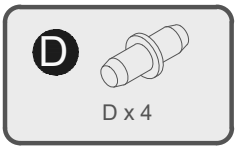

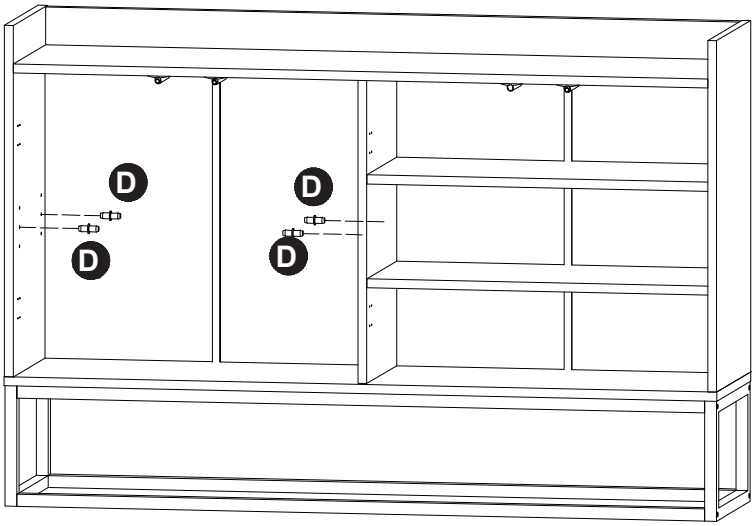

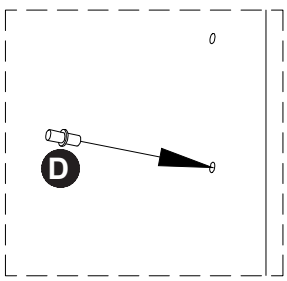

Assembly Instructions

Step 17

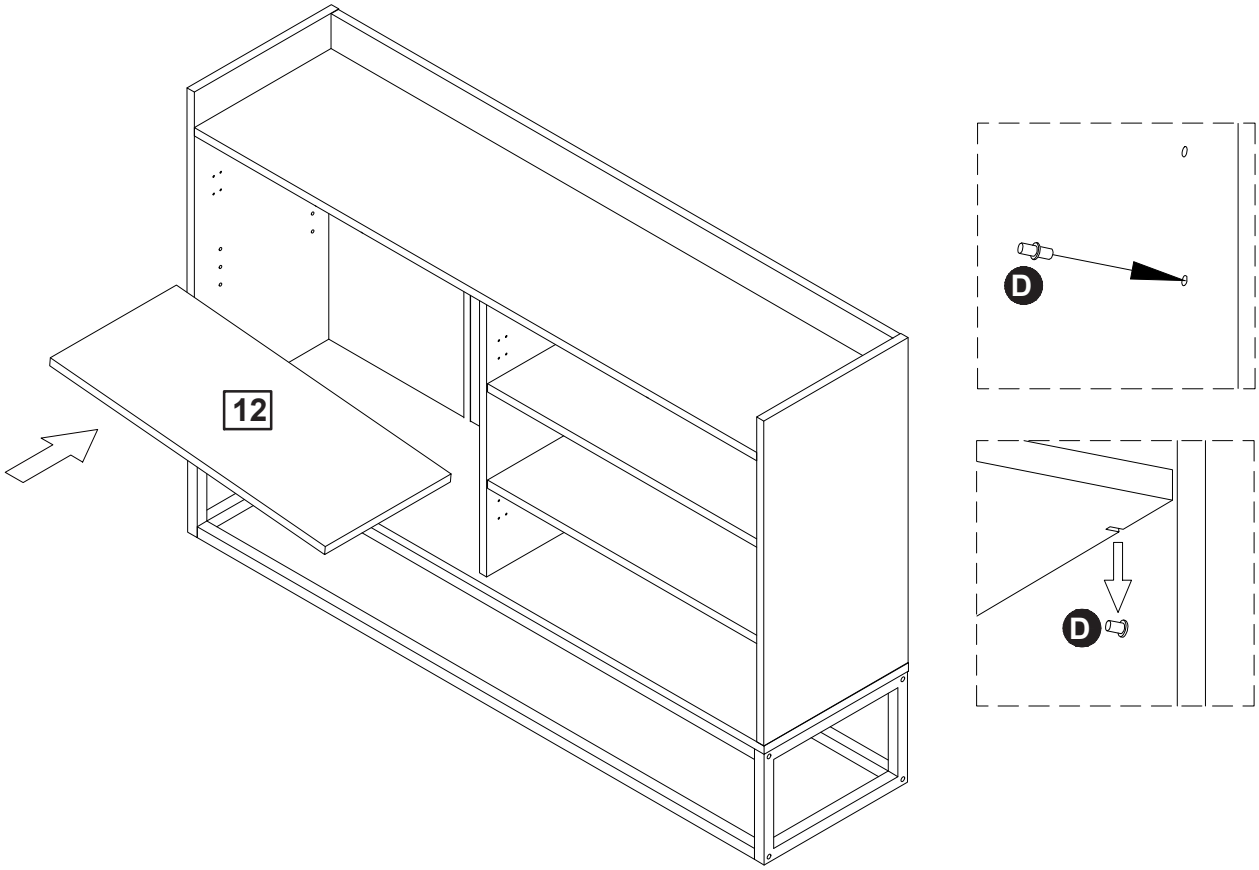

Step 18

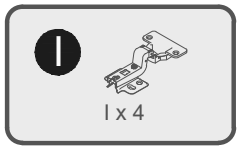

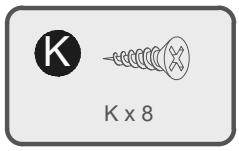

Assembly Instructions

Step 19

J x 4

K x 8

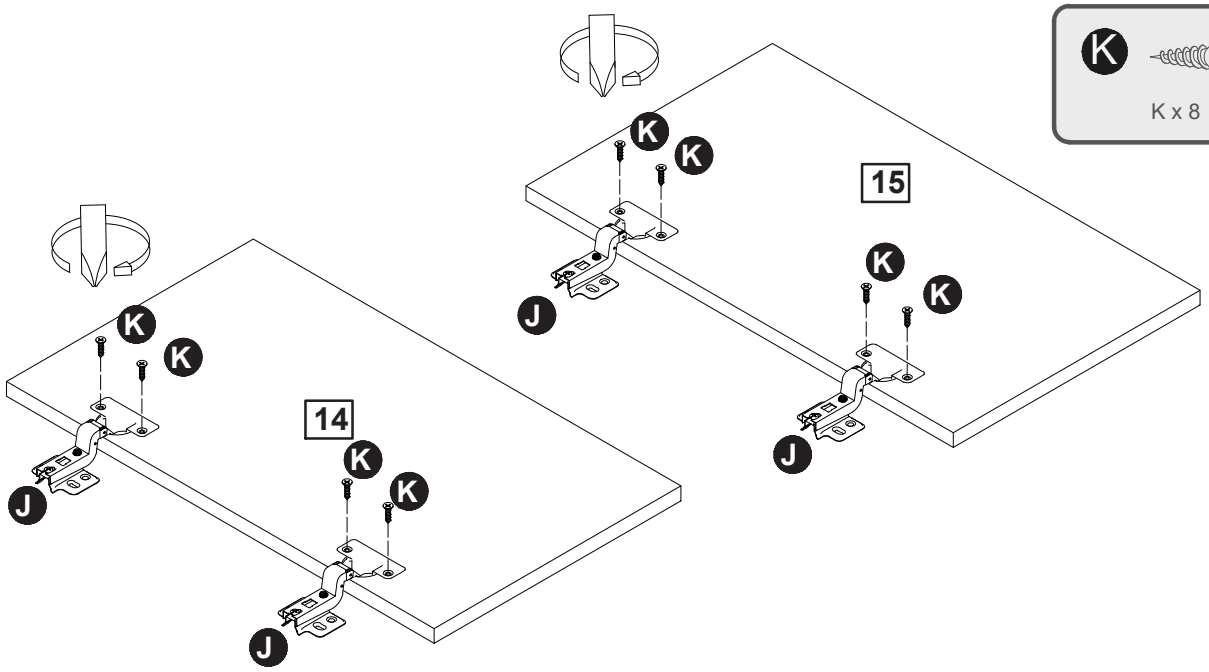

Step 20

K x 16

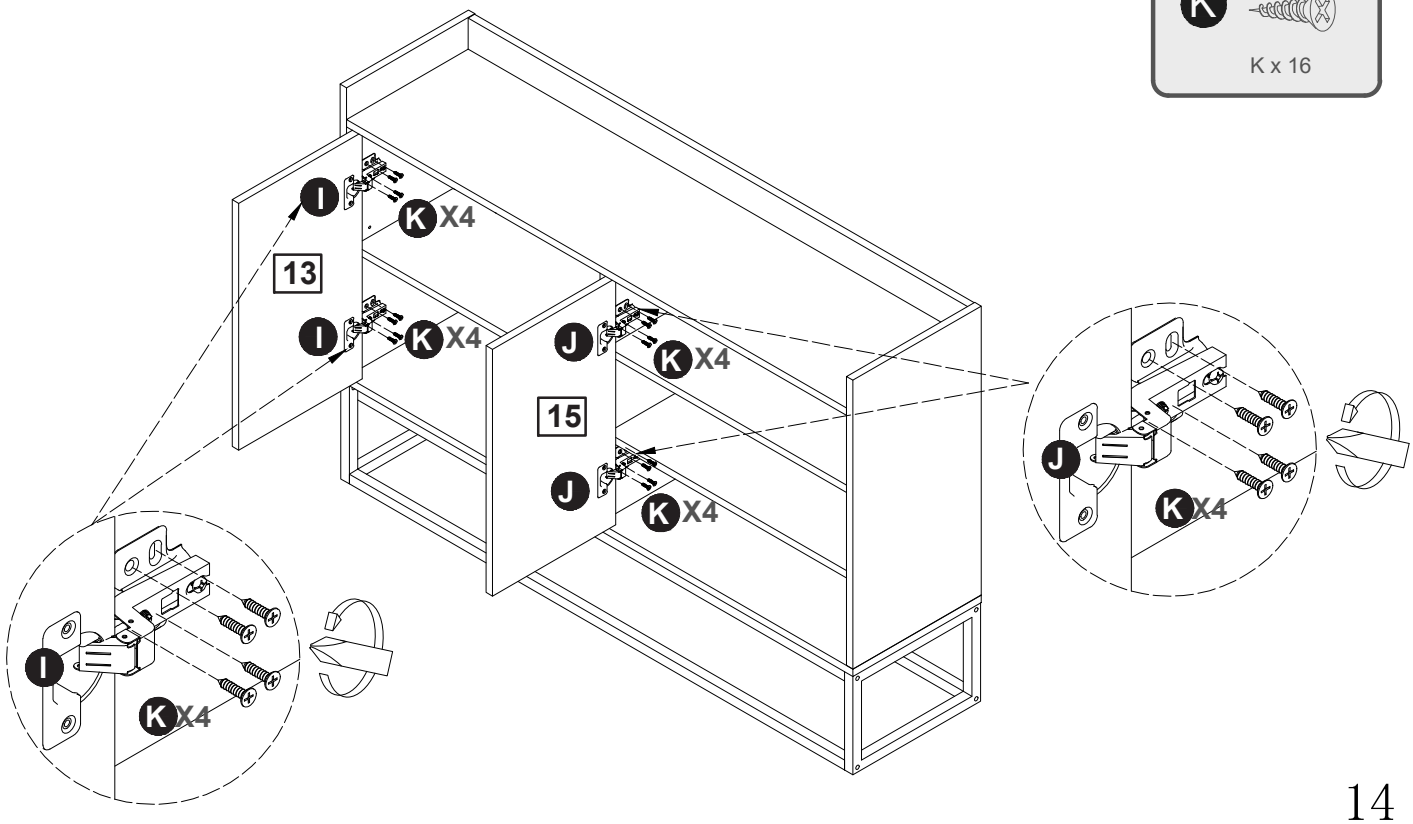

Assembly Instructions

Step 21

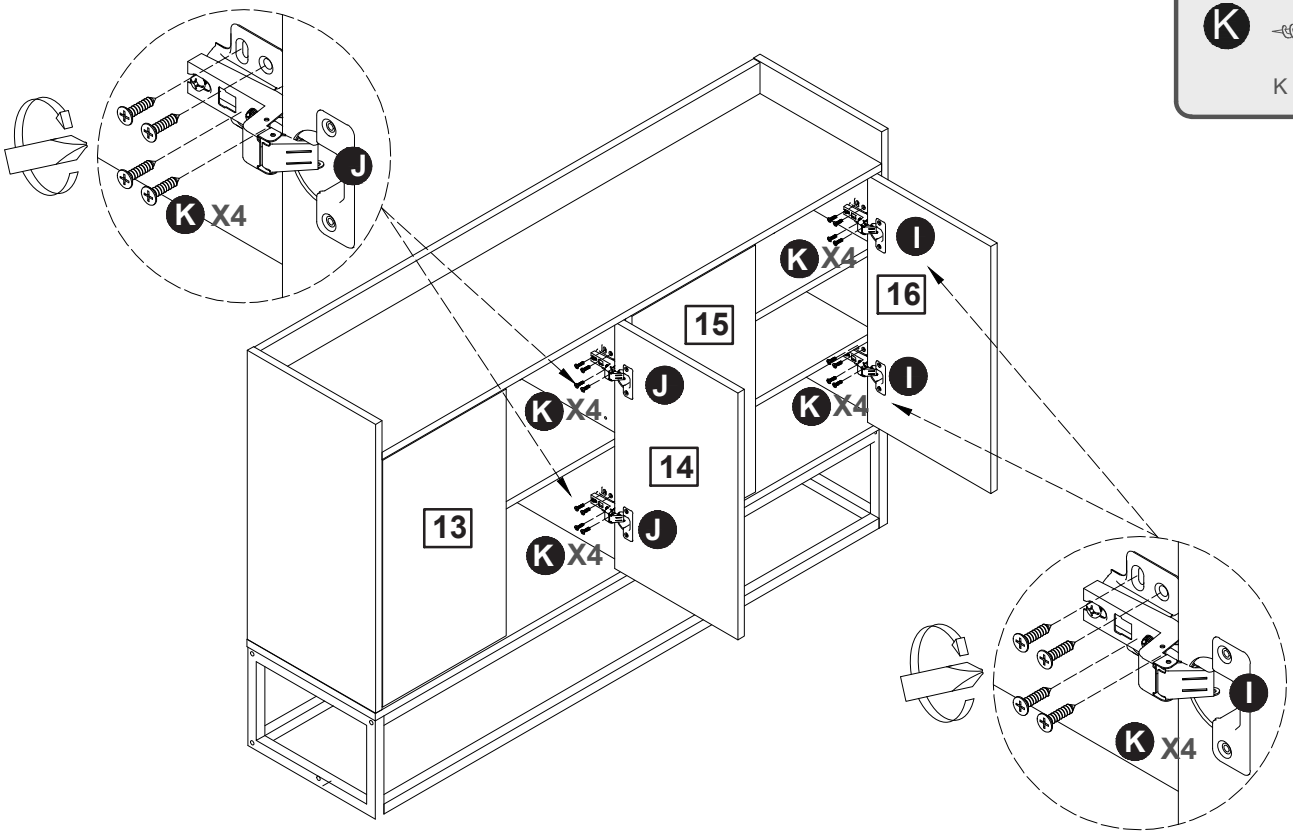

Step 22

The unit is floor standing, but it is recommended that the unit is secured to the wall.

1. Move the unit into desired position.

2. Mark the wall with a suitable scribe the position of the fixing holes.

Warning:
Before driling,check wall for hidden pipes and cables.

3. Drill holes and insert 2 x wall plug

4. Attach 2 x Wall Straps to to the top of the unit using 2 x Washers and 2 x Screws

5. Secure the straps to the wall using 2 x Washers and 2 x Screws

Note: To hide the straps behind the unit, drill the holes lower than the top of the unit

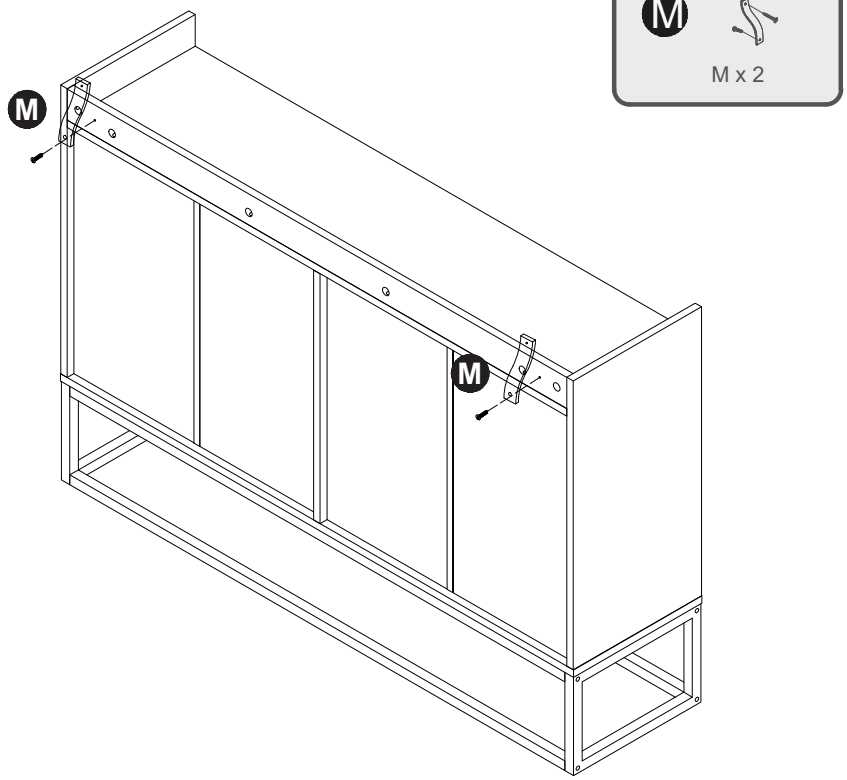

Assembly Instructions

Step 23

The unit is floor standing, but it is recommended that the unit is secured to the wall.

1. Move the unit into desired position.

2. Mark the wall with a suitable scribe the position of the fixing holes.

Warning:
Before driling,check wall for hidden pipes and cables.

3. Drill holes and insert 2 x wall plug

4. Attach 2 x Wall Straps to to the top of the unit using 2 x Washers and 2 x Screws

5. Secure the straps to the wall using 2 x Washers and 2 x Screws

Note: To hide the straps behind the unit, drill the holes lower than the top of the unit

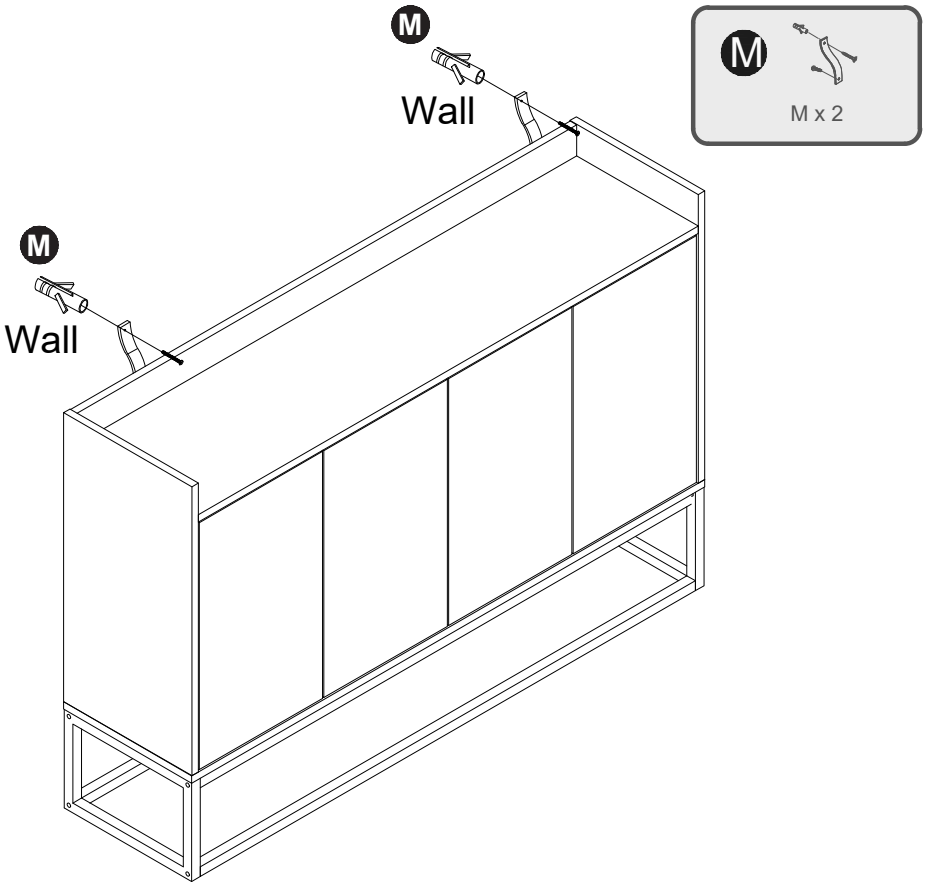

Step 24

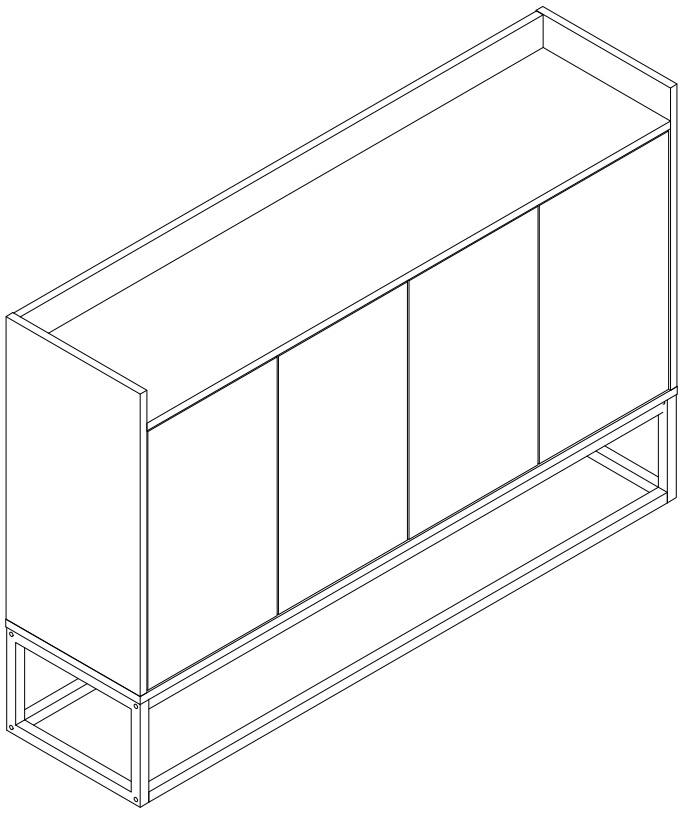

Assembly is complete.

A Guide to Wall Mounting & Fixings

Important note:

If plastic wall plugs (rawl plugs) are supplied with your product, e.g.:



- these are only suitable for use in masonry walls.

If you are in any doubt about the correct wall plugs for your wall, seek professional advice.

Failure of the product due to using the incorrect fixings is the responsibility of the installer.

Important: when drilling into walls always check that there are no hidden wires or pipes etc.

Make sure that the screws and wall plugs being used are suitable for **supporting your unit. Consult a qualified tradesperson if you** are unsure.

Hints:

1: General rule: always use a larger screw and wall plug if you are not sure.
2: Ensure you use the recommended drill bit to match the wall plug and hole size.
3: Ensure you drill the hole horizontally; do not force the drill or enlarge the hole.
4: Take extra care when drilling high walls, ceilings and ceramic tiles. Ensure wall plugs are inserted beyond the thickness of the ceramic tiles to avoid the tiles splitting or cracking.
5: Ensure wall plugs are well fitted and are a tight fit in the drilled hole.

Types of walls

You can use one of the following types of wall plug if your walls are made of brick, breeze block, concrete, stone or wood.

No.1 “General Purpose” wall plug

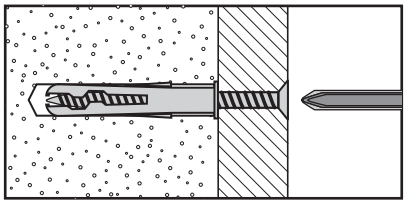

Generally aerated blocks should not be used to support heavy loads, use a specialist fitting in this case. For light loads, general purpose wall plugs can be used.

No.3 “Cavity Fixing” wall plug

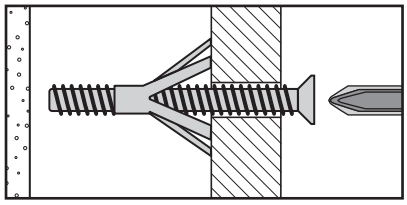

For use with plasterboard partitions or hollow wooden doors.

No.5 “Hammer Fixing” wall plug

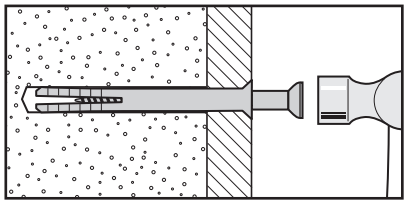

For use with walls stuck with plasterboard. The hammer fixing allows it to be fixed to the wall rather than the plasterboard. Always check the fixing is secure to the retaining wall.

No.2 “ Plasterboard” wall plug

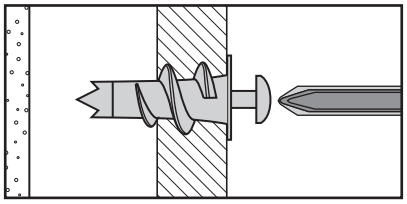

For use when attaching light loads onto plasterboard partitions.

No.4 “ Cavity Fixing – Heavy Duty” wall plug

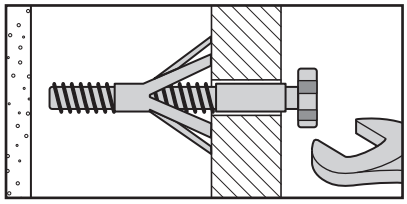

For use when fitting or supporting heavy loads such as shelving, wall cabinets and coat racks.

No.6 “ Shield Anchor” wall plug – heavy loads

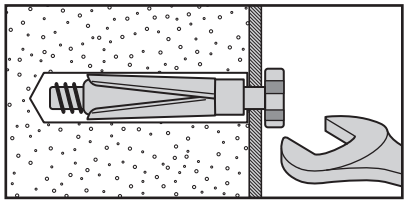

For use with heavier loads such as TV and HiFi speakers and satellite dishes etc.

Care & Maintenance

Safety: always check the fitting and location to ensure your safety in and around the home.

Fitting: from time to time check the fitting to ensure the wall plugs or screws do not become loose.